RF TEST REPORT

Applicant	VivaChek Biotech(Hangzhou) Co., Ltd.
FCC ID	2APAPVGM07
Product	Blood Glucose Meter
Model	VGM07
Report No.	R2111A0973-R1V1
Issue Date	March 22, 2022

TA Technology (Shanghai) Co., Ltd. tested the above equipment in accordance with the requirements in **FCC CFR47 Part 15C (2020)**. The test results show that the equipment tested is capable of demonstrating compliance with the requirements as documented in this report.

Prepared by: Peng Tao | *Approved by: Kai Xu*

TA Technology (Shanghai) Co., Ltd.

No.145, Jintang Rd, Tangzhen Industry Park, Pudong Shanghai, China
TEL: +86-021-50791141/2/3
FAX: +86-021-50791141/2/3-8000

TABLE OF CONTENT

1. Test Laboratory 5
1.1. Notes of the test report 5
1.2. Test facility 5
1.3. Testing Location 5
2. General Description of Equipment under Test 6
2.1. Applicant and Manufacturer Information 6
2.2. General information 6
3. Applied Standards 7
4. Test Configuration 8
5. Test Case Results 9
5.1. Unwanted Emission 9
5.2. Conducted Emission 25
6. Main Test Instruments 28
ANNEX A: The EUT Appearance 29
ANNEX B: Test Setup Photos 30

This report shall not be reproduced except in full, without the written approval of TA Technology (Shanghai) Co., Ltd.

Version	Revision description	Issue Date
Rev.0	Initial issue of report.	December 31, 2021
Rev.1	Update information in Page 6.	March 22, 2022
Note: This revised report (Report No. R2111A0973-R1V1) supersedes and replaces the previously issued report (Report No. R2111A0973-R1). Please discard or destroy the previously issued report and dispose of it accordingly.		

This report shall not be reproduced except in full, without the written approval of TA Technology (Shanghai) Co., Ltd.

Summary of measurement results

Number	Test Case	Clause in FCC rules	Verdict
1	Unwanted Emissions	15.249(d), 15.249(a), 15.209	PASS
2	Conducted Emissions	15.207	PASS
Date of Testing: November 17, 2021 ~ December 20, 2021 Date of Sample Received: November 17, 2021			
Note: All indications of Pass/Fail in this report are opinions expressed by TA Technology (Shanghai) Co., Ltd. based on interpretations and/or observations of test results. Measurement Uncertainties were not taken into account and are published for informational purposes only.			

There is only tested Unwanted Emissions and Conducted Emissions, other data please refer to the report(Report No. AGC02101180102FE03, model: HJ-580CY).

This report shall not be reproduced except in full, without the written approval of TA Technology (Shanghai) Co., Ltd.

1. Test Laboratory

1.1. Notes of the test report

This report shall not be reproduced in full or partial, without the written approval of **TA technology (shanghai) co., Ltd.** The results documented in this report apply only to the tested sample, under the conditions and modes of operation as described herein .Measurement Uncertainties were not taken into account and are published for informational purposes only. This report is written to support regulatory compliance of the applicable standards stated above.

1.2. Test facility

FCC (Designation number: CN1179, Test Firm Registration Number: 446626)

TA Technology (Shanghai) Co., Ltd. has been listed on the US Federal Communications Commission list of test facilities recognized to perform measurements.

A2LA (Certificate Number: 3857.01)

TA Technology (Shanghai) Co., Ltd. has been listed by American Association for Laboratory Accreditation to perform measurement.

1.3. Testing Location

Company:	TA Technology (Shanghai) Co., Ltd.
Address:	No.145, Jintang Rd, Tangzhen Industry Park, Pudong
City:	Shanghai
Post code:	201201
Country:	P. R. China
Contact:	Xu Kai
Telephone:	+86-021-50791141/2/3
Fax:	+86-021-50791141/2/3-8000
Website:	http://www.ta-shanghai.com
E-mail:	xukai@ta-shanghai.com

This report shall not be reproduced except in full, without the written approval of TA Technology (Shanghai) Co., Ltd.

2. General Description of Equipment under Test

2.1. Applicant and Manufacturer Information

Applicant	VivaChek Biotech(Hangzhou) Co., Ltd.
Applicant address	Level 2, Block 2, 146East Chaofeng Rd., Yuhang Economy Development Zone, Hangzhou, 311100 Zhejiang P.R. China
Manufacturer	VivaChek Biotech(Hangzhou) Co., Ltd.
Manufacturer address	Level 2, Block 2, 146East Chaofeng Rd., Yuhang Economy Development Zone, Hangzhou, 311100 Zhejiang P.R. China

2.2. General information

EUT Description	
Model	VGM07
SN	339B200000D
Hardware Version	2079006401
Software Version	SW2071640113A001
Power Supply	Battery
Antenna Type	PCB Antenna
Antenna Connector	A permanently attached antenna (meet with the standard FCC Part 15.203 requirement)
Antenna Gain	3.5dBi
additional beamforming gain	NA
Operating Frequency Range(s)	Bluetooth LE V4.1: 2402 ~2480 MHz
Modulation Type	Bluetooth LE: GFSK
EUT Accessory	
Battery 1	Manufacturer: DONGGUAN XIN KE DA ENERGY CO., LTD Model: 502030 DC 3.7V, 250mAh, 0.925Wh
Note: 1. The EUT is sent from the applicant to TA and the information of the EUT is declared by the applicant.	

This report shall not be reproduced except in full, without the written approval of TA Technology (Shanghai) Co., Ltd.

3. Applied Standards

According to the specifications of the manufacturer, it must comply with the requirements of the following standards:

Test standards:

FCC CFR47 Part 15C (2020) Radio Frequency Devices

ANSI C63.10 (2013)

Reference standard:

KDB 558074 D01 15.247 Meas Guidance v05r02

This report shall not be reproduced except in full, without the written approval of TA Technology (Shanghai) Co., Ltd.

4. Test Configuration

Test Mode

The EUT has been associated with peripherals and configuration operated in a manner tended to maximize its emission characteristics in a typical application.

The radiated emission was measured in the following position: EUT stand-up position (Z axis), lie-down position (X, Y axis). The worst emission was found in lie-down position (X axis) and the loop antenna is vertical, the others are vertical and horizontal. and the worst case was recorded.

In order to find the worst case condition, Pre-tests are needed at the presence of different data rate. Preliminary tests have been done on all the configuration for confirming worst case. Data rate below means worst-case rate of each test item.

Worst-case data rates are shown as following table.

Test Mode	Data Rate
Bluetooth(Low Energy)	1Mbps

This report shall not be reproduced except in full, without the written approval of TA Technology (Shanghai) Co., Ltd.

5. Test Case Results

5.1. Unwanted Emission

Ambient condition

Temperature	Relative humidity	Pressure
23°C ~25°C	45%~50%	102.5kPa

Method of Measurement

The test set-up was made in accordance to the general provisions of ANSI C63.10.
The Equipment Under Test (EUT) was set up on a non-conductive table in the semi-anechoic chamber. The test was performed at the distance of 3 m between the EUT and the receiving antenna.

The turntable shall be rotated from 0 to 360 degrees for detecting the maximum of radiated spurious signal level. The measurements shall be repeated with orthogonal polarization of the test antenna.The data of cable loss and antenna factor has been calibrated in full testing frequency range before the testing. Sweep the Restricted Band and the emissions less than 20 dB below the permissible value are reported.
The radiated emissions measurements were made in a typical installation configuration.
Sweep the whole frequency band through the range from 9 kHz to the 10th harmonic of the carrier, and the emissions less than 20 dB below the permissible value are reported.

This method refer to ANSI C63.10.
The procedure for peak unwanted emissions measurements above 1000 MHz is as follows:
Set the spectrum analyzer in the following:
9kHz~150 kHz
RBW=200Hz, VBW=1kHz/ Sweep=AUTO
150 kHz~30MHz
RBW=9KHz, VBW=30KHz,/ Sweep=AUTO
Below 1GHz
RBW=100kHz / VBW=300kHz / Sweep=AUTO
a) Peak emission levels are measured by setting the instrument as follows:
Above 1GHz
PEAK: RBW=1MHz VBW=3MHz/ Sweep=AUTO
b) Average emission levels are measured by setting the instrument as follows:
Above 1GHz
AVERAGE: RBW=1MHz / VBW=3MHz / Sweep=AUTO
c) Detector: The measurements employing a CISPR quasi-peak detector except for the frequency bands 9-90 kHz, 110-490 kHz and above 1000 MHz. Radiated emission limits in these three bands

This report shall not be reproduced except in full, without the written approval of TA Technology (Shanghai) Co., Ltd.

are based on measurements employing an average detector.

d) Averaging type = power (i.e., rms) (As an alternative, the detector and averaging type may be set for linear voltage averaging. Some instruments require linear display mode to use linear voltage averaging. Log or dB averaging shall not be used.)

e) Sweep time = auto.

f) Perform a trace average of at least 100 traces if the transmission is continuous. If the transmission is not continuous, then the number of traces shall be increased by a factor of 1 / D, where D is the duty cycle. For example, with 50% duty cycle, at least 200 traces shall be averaged. (If a specific emission is demonstrated to be continuous—i.e., 100% duty cycle—then rather than turning ON and OFF with the transmit cycle, at least 100 traces shall be averaged.)

g) If tests are performed with the EUT transmitting at a duty cycle less than 98%, then a correction factor shall be added to the measurement results prior to comparing with the emission limit, to compute the emission level that would have been measured had the test been performed at 100% duty cycle. The correction factor is computed as follows:

1) If power averaging (rms) mode was used in the preceding step e), then the correction factor is [10 log (1 / D)], where D is the duty cycle. For example, if the transmit duty cycle was 50%, then 3 dB shall be added to the measured emission levels.

2) If linear voltage averaging mode was used in the preceding step e), then the correction factor is [20 log (1 / D)], where D is the duty cycle. For example, if the transmit duty cycle was 50%, then 6 dB shall be added to the measured emission levels.

3) If a specific emission is demonstrated to be continuous (100% duty cycle) rather than turning ON and OFF with the transmit cycle, then no duty cycle correction is required for that emission.

The test is in transmitting mode.

This report shall not be reproduced except in full, without the written approval of TA Technology (Shanghai) Co., Ltd.

Test setup

9KHz ~ 30MHz

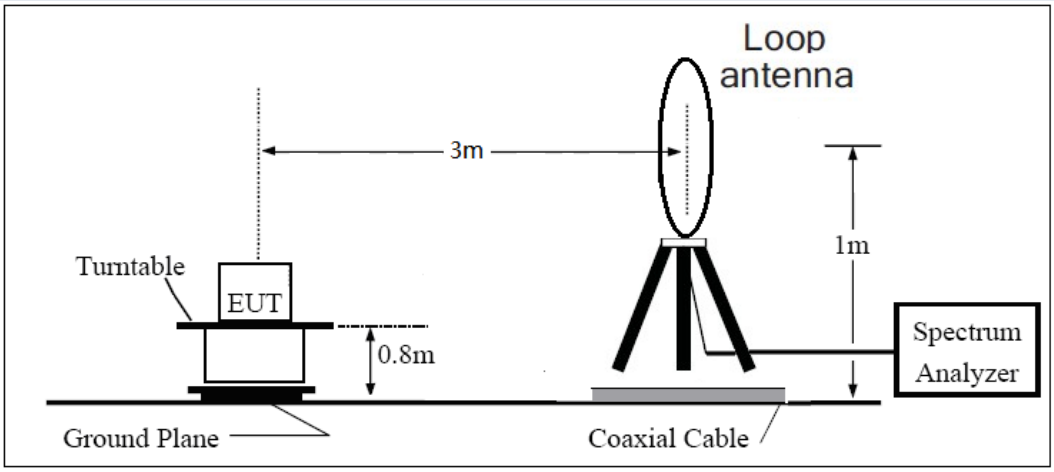

30MHz ~ 1GHz

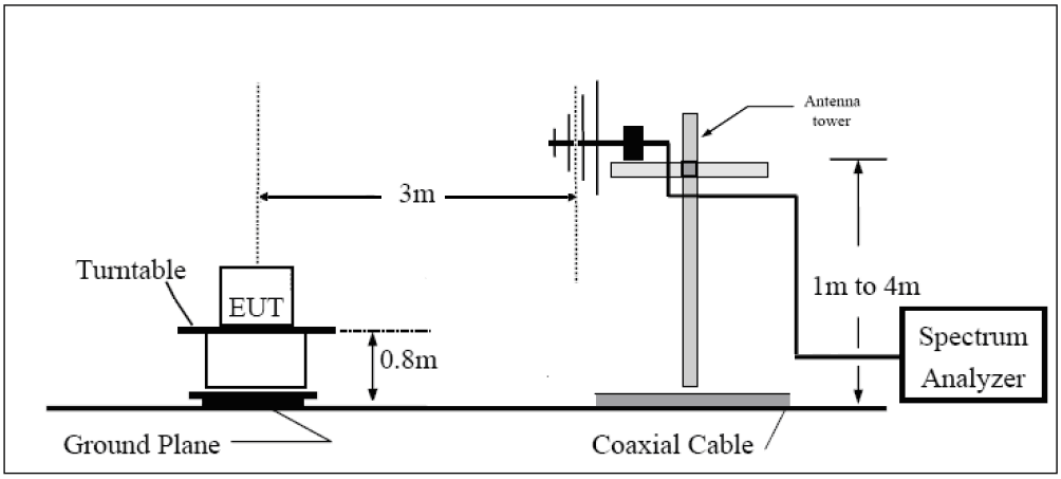

Above 1GHz

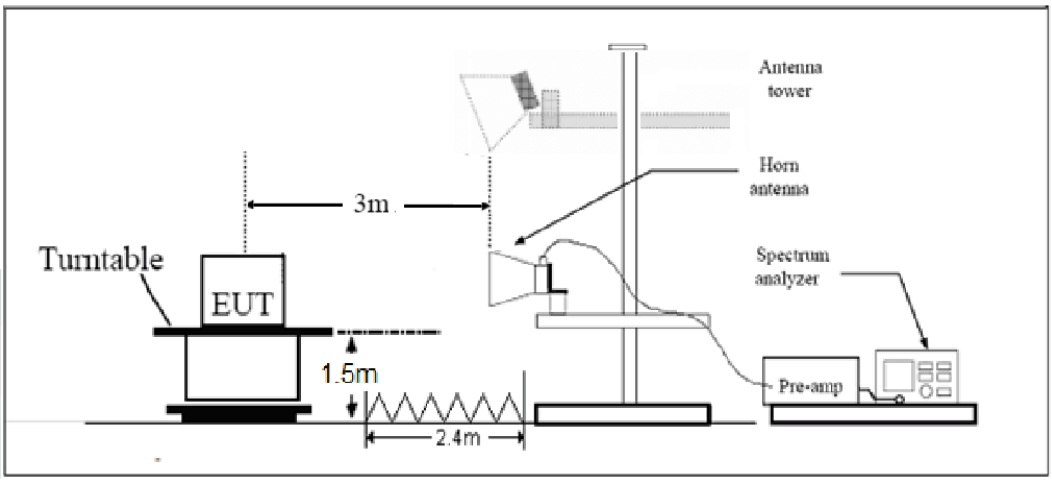

Note: Area side:2.4mX3.6m

This report shall not be reproduced except in full, without the written approval of TA Technology (Shanghai) Co., Ltd.

Limits

Rule Part 15.249(a)

Except as provided in paragraph (b) of this section, the field strength of emissions from intentional radiators operated within these frequency bands shall comply with the following:

Limit in restricted band

Fundamental frequency	Field strength of fundamental (millivolts/meter)	Field strength of harmonics (microvolts/meter)
902-928 MHz	50	500
2400-2483.5 MHz	50	500
5725-5875 MHz	50	500
24.0-24.25 GHz	250	2500

Rule Part 15.209

Frequency of emission (MHz)	Field strength(uV/m)	Field strength(dBuV/m)
0.009–0.490	2400/F(kHz)	/
0.490–1.705	24000/F(kHz)	/
1.705–30.0	30	/
30-88	100	40
88-216	150	43.5
216-960	200	46
Above960	500	54

§15.35(b)

There is also a limit on the radio frequency emissions, as measured using instrumentation with a peak detector function, corresponding to 20 dB above the maximum permitted average limit.

Peak Limit=74 dBuV/m

Average Limit=54 dBuV/m

This report shall not be reproduced except in full, without the written approval of TA Technology (Shanghai) Co., Ltd.

Spurious Radiated Emissions are permitted in any of the frequency bands listed below:

MHz	MHz	MHz	GHz
0.090-0.110	16.42-16.423	399.9-410	4.5-5.15
[1] 0.495-0.505	16.69475-16.69525	608-614	5.35-5.46
2.1735-2.1905	16.80425-16.80475	960-1240	7.25-7.75
4.125-4.128	25.5-25.67	1300-1427	8.025-8.5
4.17725-4.17775	37.5-38.25	1435-1626.5	9.0-9.2
4.20725-4.20775	73-74.6	1645.5-1646.5	9.3-9.5
6.215-6.218	74.8-75.2	1660-1710	10.6-12.7
6.26775-6.26825	108-121.94	1718.8-1722.2	13.25-13.4
6.31175-6.31225	123-138	2200-2300	14.47-14.5
8.291-8.294	149.9-150.05	2310-2390	15.35-16.2
8.362-8.366	156.52475-156.52525	2483.5-2500	17.7-21.4
8.37625-8.38675	156.7-156.9	2690-2900	22.01-23.12
8.41425-8.41475	162.0125-167.17	3260-3267	23.6-24.0
12.29-12.293	167.72-173.2	3332-3339	31.2-31.8
12.51975-12.52025	240-285	3345.8-3358	36.43-36.5
12.57675-12.57725	322-335.4	3600-4400	([2])
13.36-13.41			

[1] Until February 1, 1999, this restricted band shall be 0.490-0.510 MHz.

[2] Above 38.6

Measurement Uncertainty

The assessed measurement uncertainty to ensure 95% confidence level for the normal distribution is with the coverage factor k = 1.96.

Frequency	Uncertainty
9KHz-30MHz	3.55 dB
30MHz-200MHz	4.17 dB
200MHz-1GHz	4.84 dB
1-18GHz	4.35 dB
18-26.5GHz	5.90 dB
26.5GHz~40GHz	5.92 dB

This report shall not be reproduced except in full, without the written approval of TA Technology (Shanghai) Co., Ltd.

Test Results:

Note: A font (dB V/)in the test plot =(dB μ V/m)

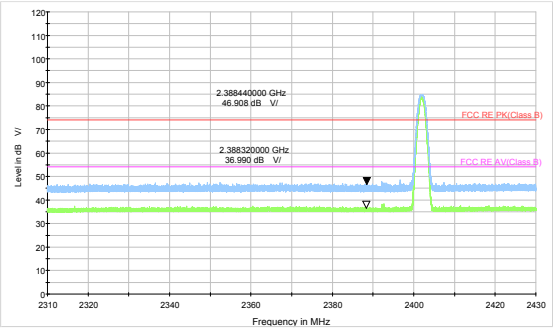

Bluetooth LE (1M) Channel 0 Peak + Average

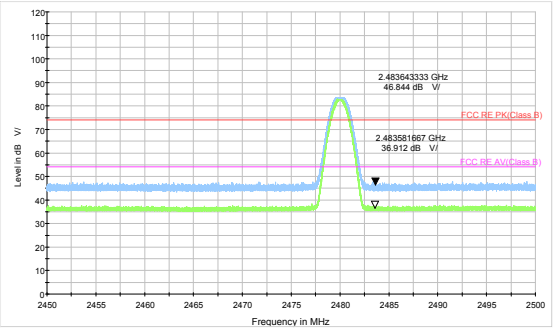

Bluetooth LE (1M) Channel 39 Peak + Average

This report shall not be reproduced except in full, without the written approval of TA Technology (Shanghai) Co., Ltd.

Result of RE

Test result

Sweep the whole frequency band through the range from 9kHz to the 10th harmonic of the carrier, the Emissions in the frequency band 9kHz-30MHz and 18GHz-26.5GHz are more than 20dB below the limit are not reported.

The following graphs display the maximum values of horizontal and vertical by software.
For above 1GHz, Blue trace uses the peak detection, Green trace uses the average detection.

During the test, the Radiates Emission from 30MHz to 1GHz was performed in all modes with all channels, Bluetooth LE-Channel 19 are selected as the worst condition. The test data of the worst-case condition was recorded in this report.

Note: A font (Level in dBµV/)in the test plot =(level in dB µ V/m)

A font (dB V/)in the test plot =(dB µ V/m)

Continuous TX mode:

FCC RE 9K-90KHz AV

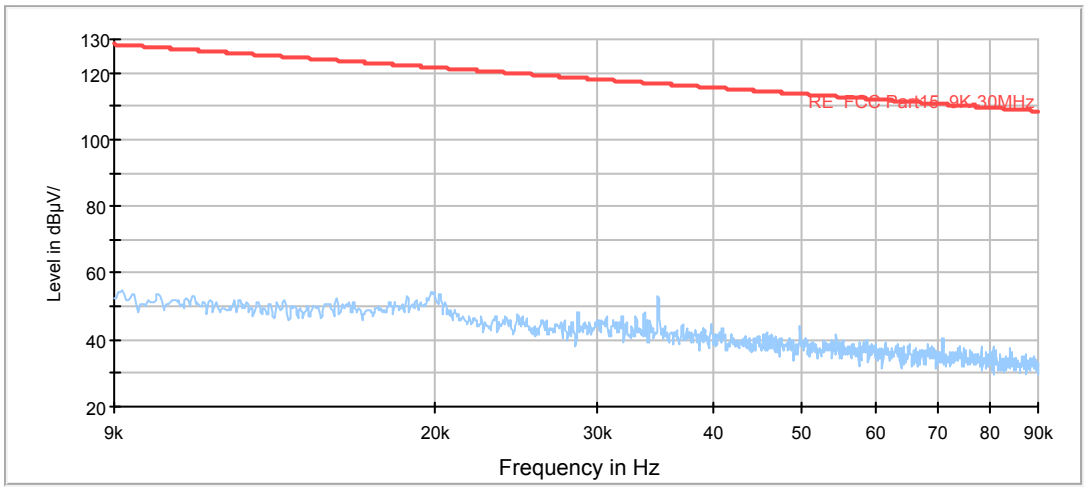

Radiates Emission from 9KHz to 90KHz

FCC RE 90K-110KHz QP

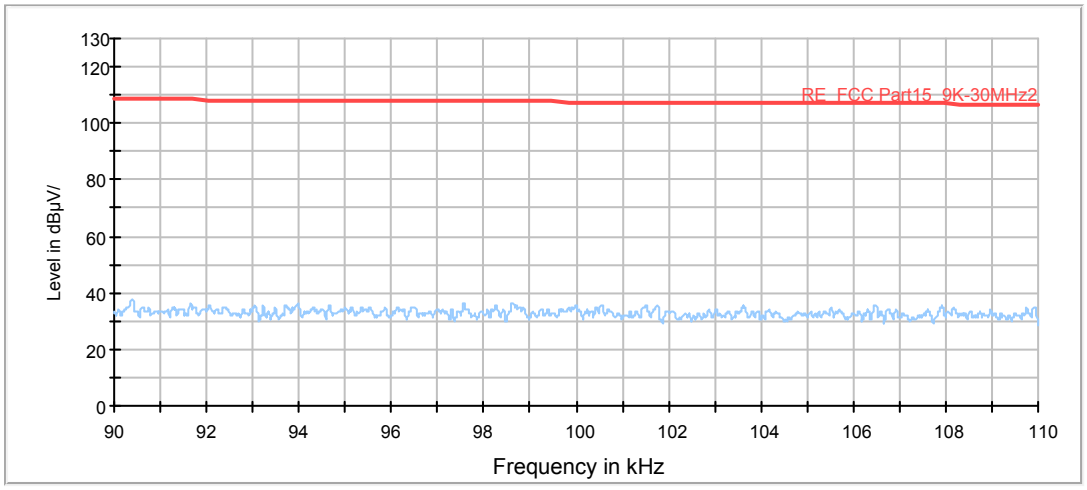

Radiates Emission from 90KHz to 110KHz

This report shall not be reproduced except in full, without the written approval of TA Technology (Shanghai) Co., Ltd.

FCC RE 110K-490KHz AV

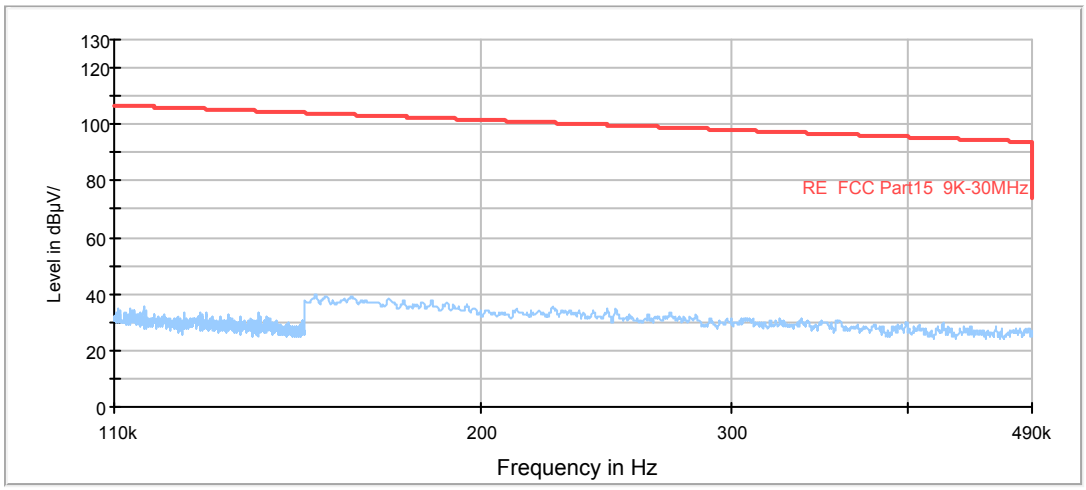

Radiates Emission from 110KHz to 490KHz

FCC RE 490K-30MHz QP

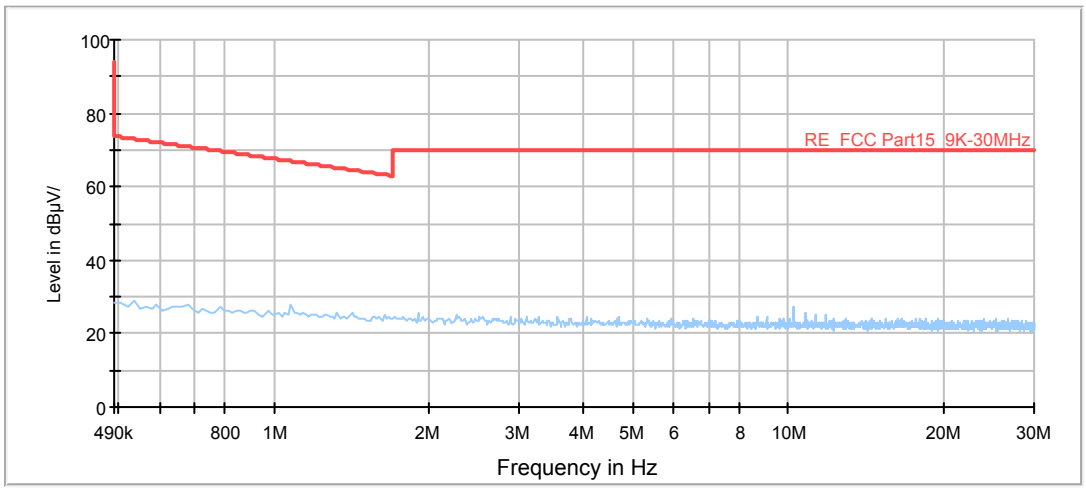

Radiates Emission from 490KHz to 30MHz

This report shall not be reproduced except in full, without the written approval of TA Technology (Shanghai) Co., Ltd.

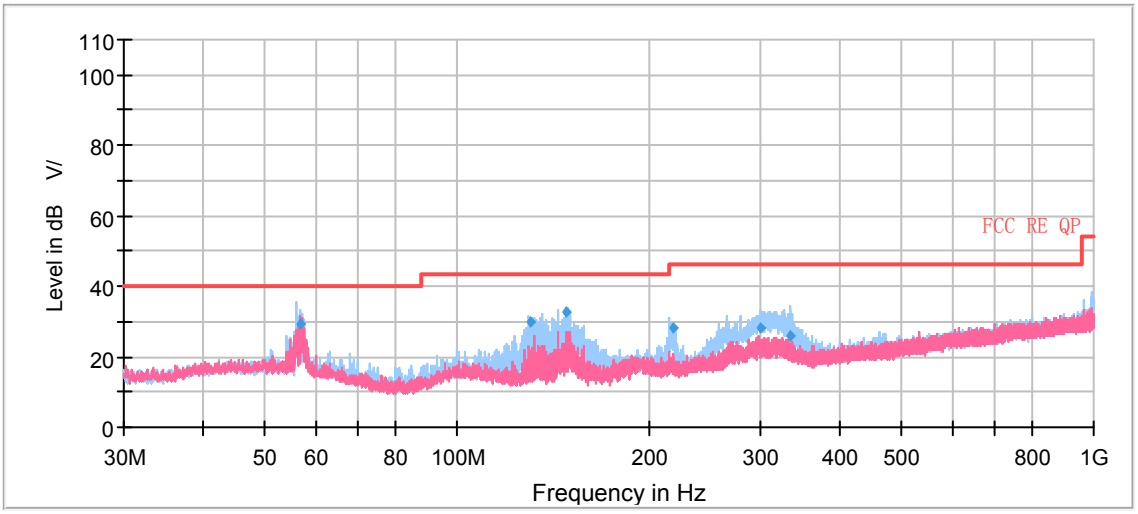

Radiates Emission from 30MHz to 1GHz

Frequency (MHz)	Quasi-Peak (dBuV/m)	Height (cm)	Polarization	Azimuth (deg)	Correct Factor (dB)	Margin (dB)	Limit (dBuV/m)
56.596000	29.15	225.0	H	0.0	20	10.85	40.00
130.014667	29.75	225.0	H	0.0	15	13.75	43.50
148.986667	32.58	225.0	H	353.0	15	10.92	43.50
218.988333	28.41	175.0	H	199.0	18	17.59	46.00
298.771667	27.94	112.0	H	0.0	20	18.06	46.00
333.653333	26.07	125.0	H	354.0	21	19.93	46.00

Remark: 1. Correction Factor = Antenna factor+ Insertion loss(cable loss+amplifier gain)

2. Margin = Limit – Quasi-Peak

This report shall not be reproduced except in full, without the written approval of TA Technology (Shanghai) Co., Ltd.

Bluetooth LE-Channel 0

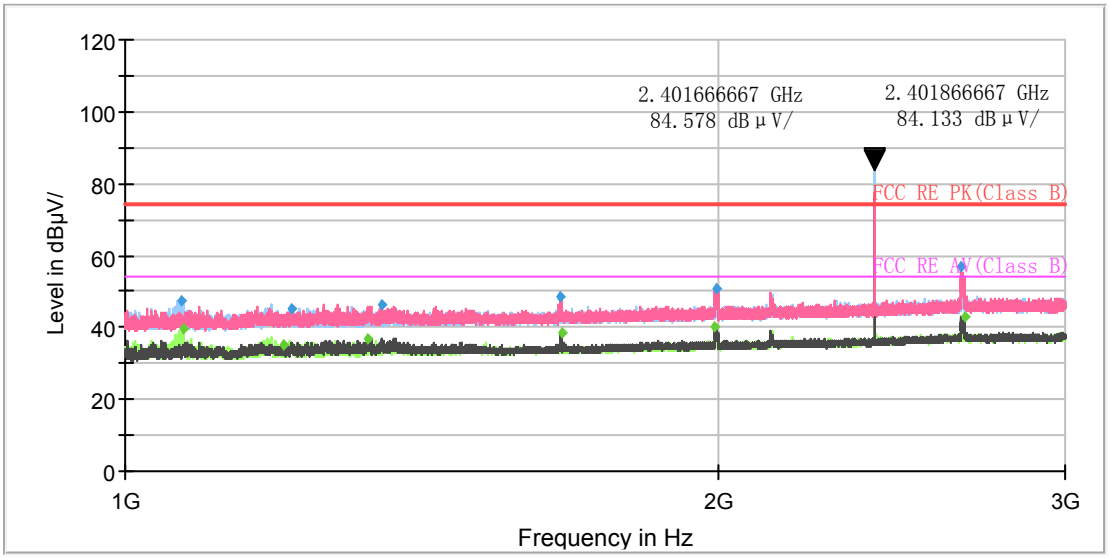

Note: The signal beyond the limit is carrier.

Radiates Emission from 1GHz to 3GHz

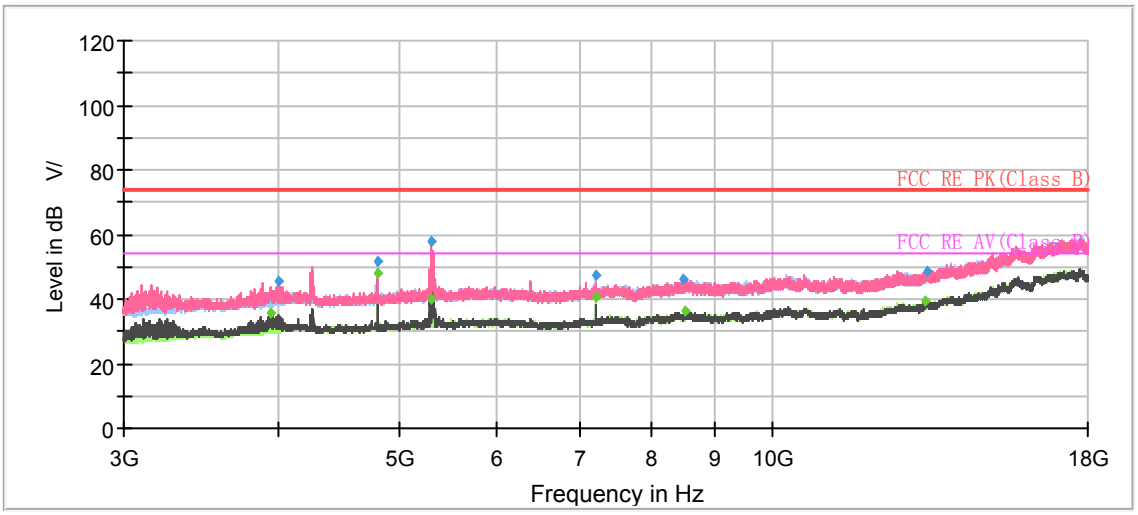

Radiates Emission from 3GHz to 18GHz

This report shall not be reproduced except in full, without the written approval of TA Technology (Shanghai) Co., Ltd.

Frequency (MHz)	MaxPeak (dB μ V/m)	Average (dB μ V/m)	Limit (dB μ V/m)	Margin (dB)	Height (cm)	Pol	Azimuth (deg)	Corr. (dB/m)
1066.733333	47.55	---	74.00	26.45	200.0	H	16.0	-9
1069.600000	---	39.36	54.00	14.64	200.0	H	16.0	-9
1204.666667	---	35.22	54.00	18.78	200.0	V	331.0	-8
1215.533333	45.29	---	74.00	28.71	200.0	V	23.0	-8
1328.600000	---	37.04	54.00	16.96	200.0	V	44.0	-7
1350.733333	46.09	---	74.00	27.91	100.0	V	43.0	-7
1661.266667	48.30	---	74.00	25.70	200.0	V	353.0	-5
1665.466667	---	38.61	54.00	15.39	200.0	V	338.0	-5
1992.533333	---	40.02	54.00	13.98	100.0	V	29.0	-3
1994.266667	50.66	---	74.00	23.34	100.0	V	29.0	-3
2656.400000	56.82	---	74.00	17.18	100.0	V	134.0	0
2666.133333	---	43.17	54.00	10.83	100.0	V	348.0	0

Remark: 1. Correction Factor = Antenna factor+ Insertion loss (cable loss + amplifier gain)

This report shall not be reproduced except in full, without the written approval of TA Technology (Shanghai) Co., Ltd.

Bluetooth LE-Channel 19

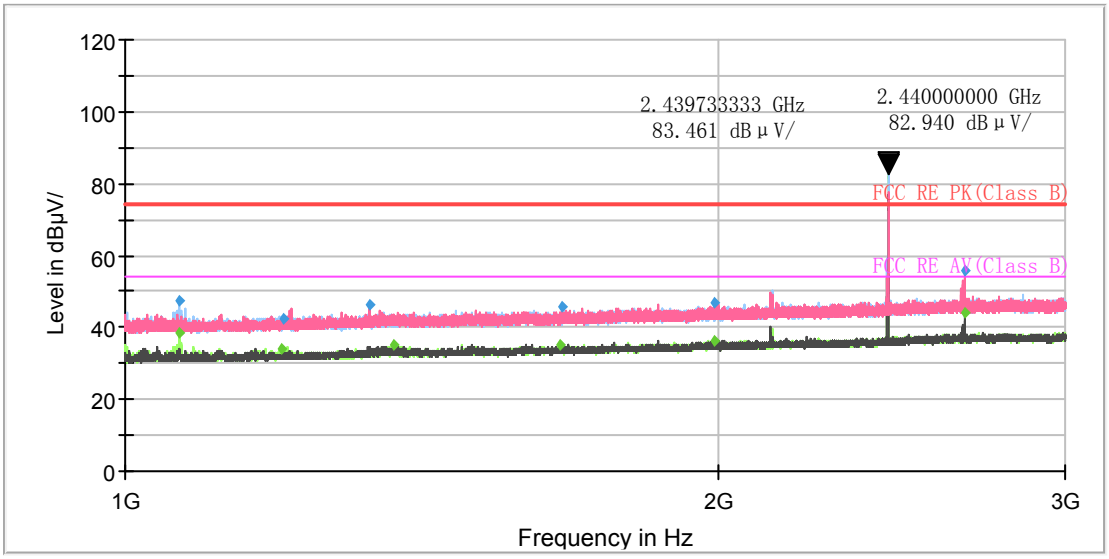

Note: The signal beyond the limit is carrier.

Radiates Emission from 1GHz to 3GHz

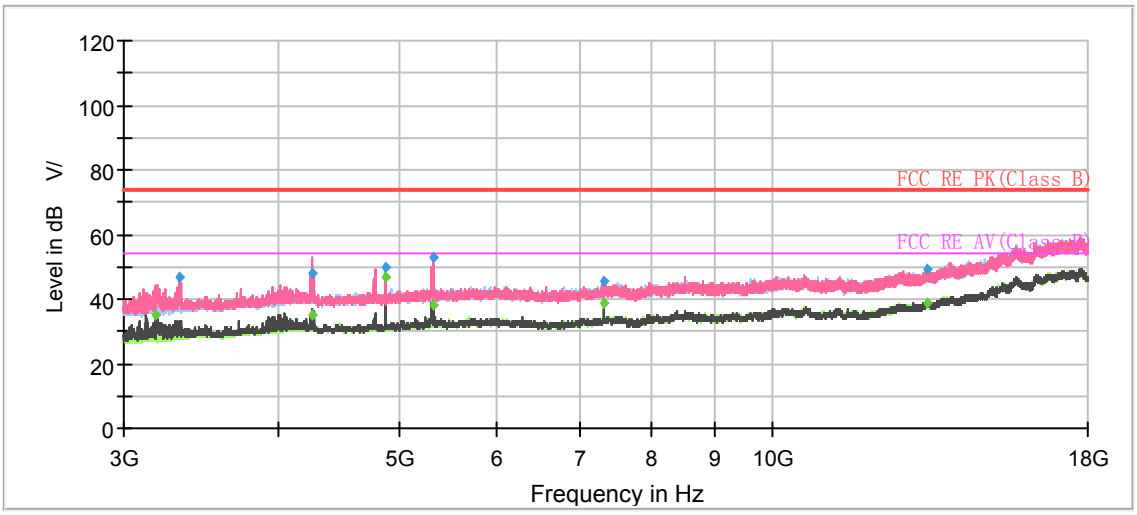

Radiates Emission from 3GHz to 18GHz

This report shall not be reproduced except in full, without the written approval of TA Technology (Shanghai) Co., Ltd.

Frequency (MHz)	MaxPeak (dB μ V/m)	Average (dB μ V/m)	Limit (dB μ V/m)	Margin (dB)	Height (cm)	Pol	Azimuth (deg)	Corr. (dB/m)
1065.266667	47.26	---	74.00	26.74	200.0	H	22.0	-9
1065.266667	---	38.40	54.00	15.60	200.0	H	22.0	-9
1201.266667	---	34.23	54.00	19.77	200.0	H	11.0	-8
1203.400000	42.24	---	74.00	31.76	100.0	V	301.0	-8
1332.133333	46.50	---	74.00	27.50	200.0	V	127.0	-7
1369.266667	---	35.01	54.00	18.99	100.0	V	50.0	-7
1662.866667	---	35.30	54.00	18.70	200.0	V	143.0	-5
1665.400000	45.52	---	74.00	28.48	200.0	V	156.0	-5
1991.266667	46.72	---	74.00	27.28	100.0	V	124.0	-3
1991.866667	---	36.49	54.00	17.51	100.0	V	124.0	-3
2666.266667	55.83	---	74.00	18.17	100.0	V	193.0	0
2666.266667	---	43.94	54.00	10.06	100.0	V	193.0	0

Remark: 1. Correction Factor = Antenna factor+ Insertion loss (cable loss + amplifier gain)

This report shall not be reproduced except in full, without the written approval of TA Technology (Shanghai) Co., Ltd.

Bluetooth LE-Channel 39

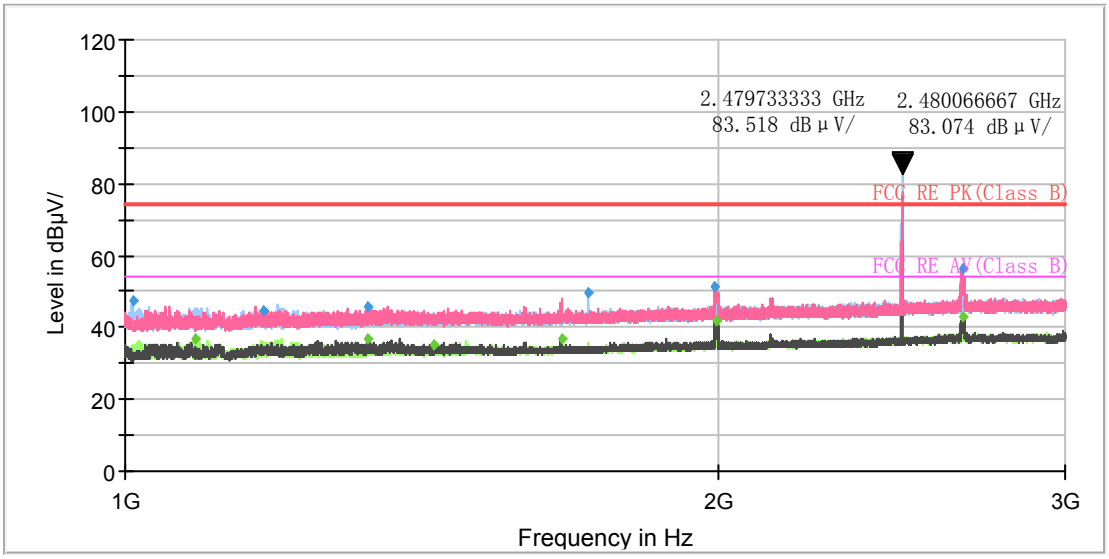

Note: The signal beyond the limit is carrier.

Radiates Emission from 1GHz to 3GHz

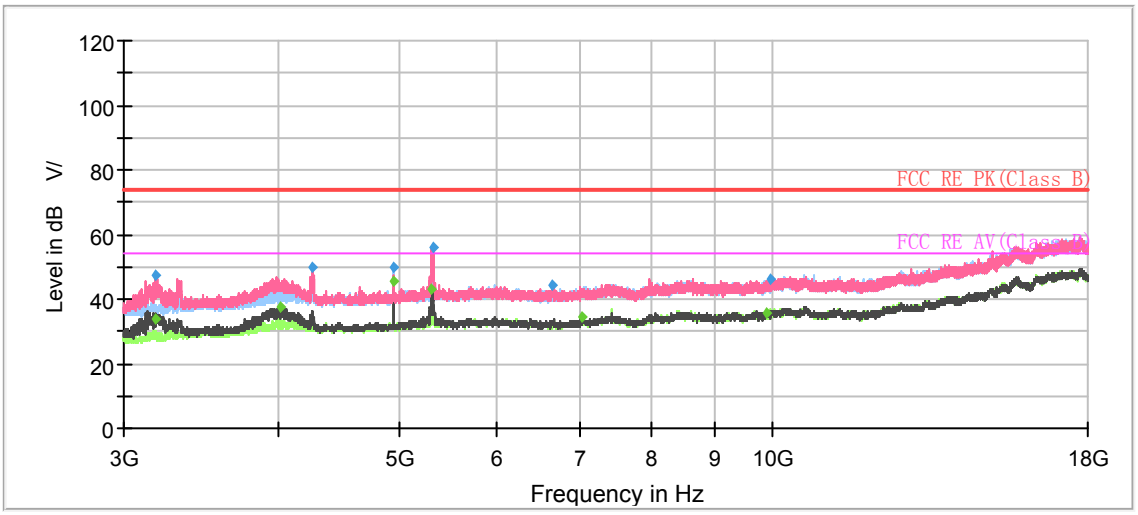

Radiates Emission from 3GHz to 18GHz

This report shall not be reproduced except in full, without the written approval of TA Technology (Shanghai) Co., Ltd.

Frequency (MHz)	MaxPeak (dB μ V/m)	Average (dB μ V/m)	Limit (dB μ V/m)	Margin (dB)	Height (cm)	Pol	Azimuth (deg)	Corr. (dB/m)
1009.400000	47.21	---	74.00	26.79	200.0	H	37.0	-9
1086.666667	---	36.90	54.00	17.10	200.0	H	17.0	-8
1174.400000	44.90	---	74.00	29.10	200.0	H	17.0	-8
1328.866667	46.04	---	74.00	27.96	200.0	V	41.0	-7
1328.866667	---	36.97	54.00	17.03	200.0	V	41.0	-7
1434.133333	---	35.11	54.00	18.89	200.0	V	296.0	-6
1665.466667	---	36.63	54.00	17.37	200.0	V	349.0	-5
1717.066667	49.61	---	74.00	24.39	200.0	H	44.0	-5
1993.000000	51.61	---	74.00	22.39	100.0	V	174.0	-3
1993.800000	---	41.91	54.00	12.09	100.0	V	28.0	-3
2661.533333	56.31	---	74.00	17.69	200.0	V	262.0	0
2661.600000	---	42.80	54.00	11.20	100.0	V	139.0	0

Remark: 1. Correction Factor = Antenna factor+ Insertion loss (cable loss + amplifier gain)

This report shall not be reproduced except in full, without the written approval of TA Technology (Shanghai) Co., Ltd.

During the test, the Radiates Emission from 18GHz to 26.5GHz was performed in all modes with all channels, Bluetooth LE-Channel 19 are selected as the worst condition. The test data of the worst-case condition was recorded in this report.

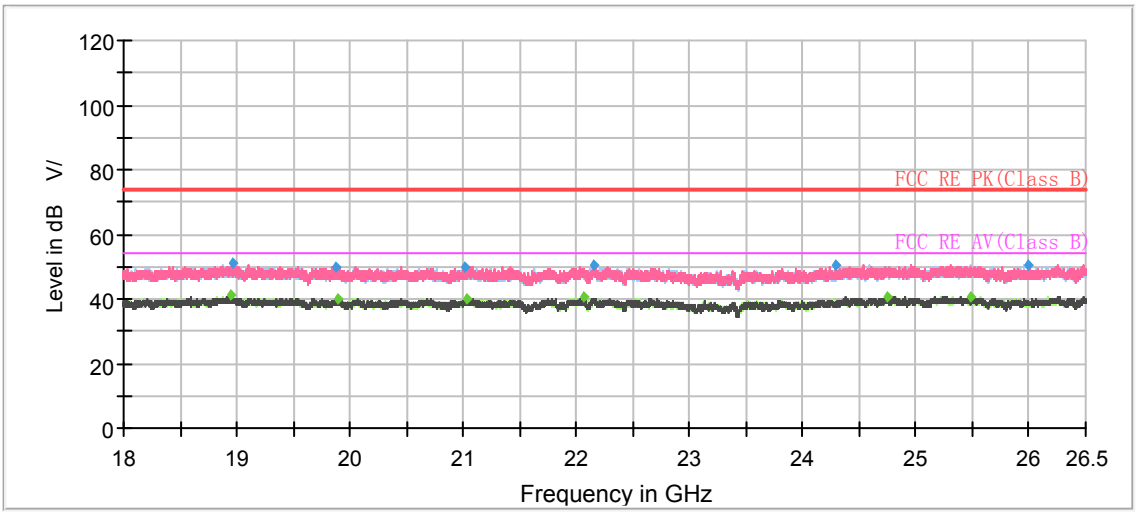

Radiates Emission from 18GHz to 26.5GHz

Frequency (MHz)	MaxPeak (dB μ V/m)	Average (dB μ V/m)	Limit (dB μ V/m)	Margin (dB)	Height (cm)	Pol	Azimuth (deg)	Corr. (dB/m)
18946.050000	---	40.97	54.00	13.03	100.0	H	190.0	-1
18966.450000	51.12	---	74.00	22.88	200.0	V	94.0	-1
19869.433333	49.88	---	74.00	24.12	100.0	V	331.0	-1
19886.150000	---	40.11	54.00	13.89	100.0	V	173.0	-1
21018.916667	50.07	---	74.00	23.93	200.0	V	308.0	0
21037.900000	---	40.08	54.00	13.92	100.0	H	216.0	0
22058.466667	---	40.80	54.00	13.20	200.0	V	51.0	1
22153.666667	50.36	---	74.00	23.64	100.0	V	0.0	1
24285.750000	50.38	---	74.00	23.62	200.0	V	213.0	3
24744.183333	---	40.66	54.00	13.34	200.0	V	241.0	3
25489.066667	---	40.72	54.00	13.28	200.0	H	259.0	3
25988.016667	50.66	---	74.00	23.34	200.0	H	294.0	3

This report shall not be reproduced except in full, without the written approval of TA Technology (Shanghai) Co., Ltd.

5.2. Conducted Emission

Ambient condition

Temperature	Relative humidity	Pressure
23°C ~25°C	45%~50%	101.5kPa

Methods of Measurement

The EUT is placed on a non-metallic table of 80cm height above the horizontal metal reference ground plane. During the test, the EUT was operating in its typical mode. The test method is according to ANSI C63.10. Connect the AC power line of the EUT to the L.I.S.N. Use EMI receiver to detect the average and Quasi-peak value. RBW is set to 9 kHz, VBW is set to 30kHz.
The measurement result should include both L line and N line.
The test is in transmitting mode.

Test Setup

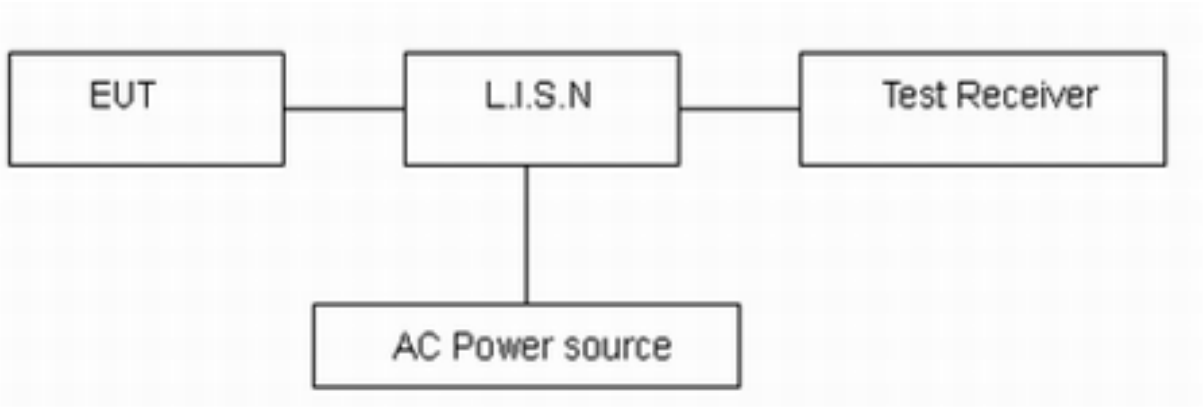

Note: AC Power source is used to change the voltage 110V/60Hz.

Limits

Frequency (MHz)	Conducted Limits(dBμV)	
	Quasi-peak	Average
0.15 - 0.5	66 to 56 *	56 to 46*
0.5 - 5	56	46
5 - 30	60	50
*: Decreases with the logarithm of the frequency.		

Measurement Uncertainty

The assessed measurement uncertainty to ensure 95% confidence level for the normal distribution is with the coverage factor k = 1.96, U= 2.69 dB.

This report shall not be reproduced except in full, without the written approval of TA Technology (Shanghai) Co., Ltd.

Test Results:

Following plots, Blue trace uses the peak detection and Green trace uses the average detection. During the test, the Conducted Emission was performed in all modes (Bluetooth LE) with all channels, Bluetooth LE-Channel 19 are selected as the worst condition. The test data of the worst-case condition was recorded in this report.

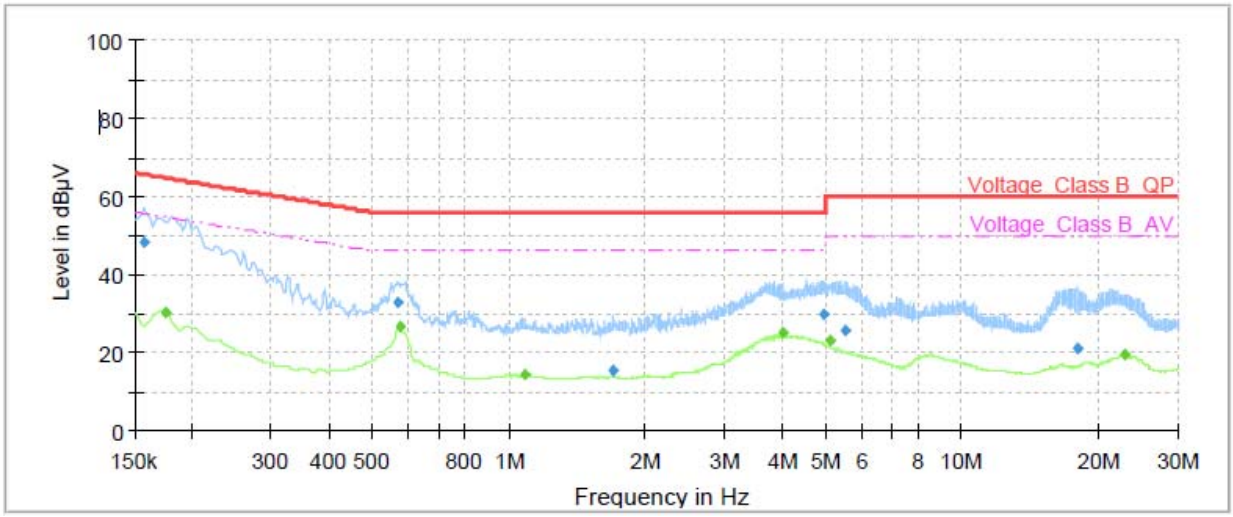

Frequency (MHz)	QuasiPeak (dBµV)	Average (dBµV)	Limit (dBµV)	Margin (dB)	Meas. Time (ms)	Bandwidth (kHz)	Line	Filter	Corr. (dB)
0.16	47.98	---	65.63	17.65	70.0	9.000	L1	ON	21
0.17	---	30.06	54.73	24.67	70.0	9.000	L1	ON	21
0.57	32.68	---	56.00	23.32	70.0	9.000	L1	ON	20
0.57	---	26.84	46.00	19.16	70.0	9.000	L1	ON	20
1.09	---	14.30	46.00	31.70	70.0	9.000	L1	ON	20
1.70	15.43	---	56.00	40.57	70.0	9.000	L1	ON	20
4.02	---	24.94	46.00	21.06	70.0	9.000	L1	ON	19
4.94	29.53	---	56.00	26.47	70.0	9.000	L1	ON	19
5.13	---	22.93	50.00	27.07	70.0	9.000	L1	ON	19
5.50	25.85	---	60.00	34.15	70.0	9.000	L1	ON	19
17.93	20.90	---	60.00	39.10	70.0	9.000	L1	ON	20
22.73	---	19.70	50.00	30.30	70.0	9.000	L1	ON	20

Remark: Correct factor=cable loss + LISN factor

L line Conducted Emission from 150 KHz to 30 MHz

This report shall not be reproduced except in full, without the written approval of TA Technology (Shanghai) Co., Ltd.

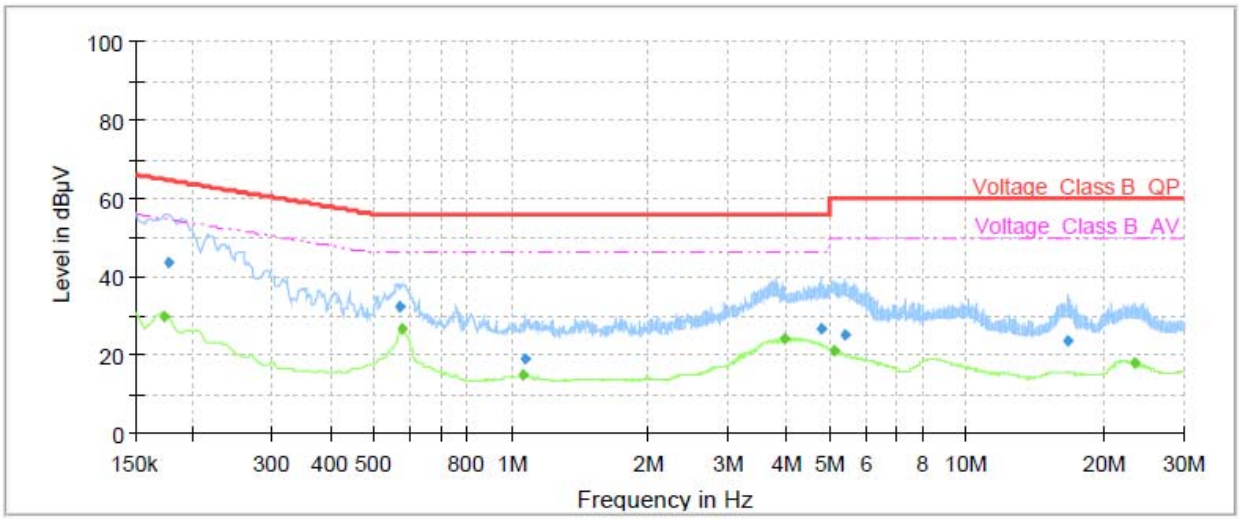

Frequency (MHz)	QuasiPeak (dBµV)	Average (dBµV)	Limit (dBµV)	Margin (dB)	Meas. Time (ms)	Bandwidth (kHz)	Line	Filter	Corr. (dB)
0.17	---	29.55	54.84	25.29	70.0	9.000	N	ON	21
0.18	43.83	---	64.63	20.80	70.0	9.000	N	ON	21
0.57	32.23	---	56.00	23.77	70.0	9.000	N	ON	20
0.57	---	26.49	46.00	19.51	70.0	9.000	N	ON	20
1.06	---	14.81	46.00	31.19	70.0	9.000	N	ON	20
1.07	18.76	---	56.00	37.24	70.0	9.000	N	ON	20
4.00	---	24.25	46.00	21.75	70.0	9.000	N	ON	19
4.79	26.46	---	56.00	29.54	70.0	9.000	N	ON	19
5.13	---	20.88	50.00	29.12	70.0	9.000	N	ON	19
5.42	24.89	---	60.00	35.11	70.0	9.000	N	ON	19
16.59	23.74	---	60.00	36.26	70.0	9.000	N	ON	20
23.31	---	17.98	50.00	32.02	70.0	9.000	N	ON	20

Remark: Correct factor=cable loss + LISN factor

N line Conducted Emission from 150 KHz to 30 MHz

This report shall not be reproduced except in full, without the written approval of TA Technology (Shanghai) Co., Ltd.

6. Main Test Instruments

Name	Manufacturer	Type	Serial Number	Calibration Date	Expiration Date
LISN	R&S	ENV216	101171	2021-12-11	2022-12-12
EMI Test Receiver	R&S	ESR	101667	2021-05-15	2022-05-14
Software	R&S	EMC32	10.35.10	/	/
EMI Test Receiver	R&S	ESCI7	100936	2021-12-12	2022-12-11
Spectrum Analyzer	R&S	FSV40	100816	2021-05-15	2022-05-14
TRILOG Broadband Antenna	SCHWARZBECK	VULB 9163	1023	2020-05-05	2023-05-04
Horn Antenna	R&S	HF907	102723	2020-08-11	2023-08-10
Horn Antenna	ETS-Lindgren	3160-09	00102643	2018-06-20	2023-06-19
Software	R&S	EMC32	9.26.0	/	/

********END OF REPORT ********

This report shall not be reproduced except in full, without the written approval of TA Technology (Shanghai) Co., Ltd.

ANNEX A: The EUT Appearance

The EUT Appearance are submitted separately.

This report shall not be reproduced except in full, without the written approval of TA Technology (Shanghai) Co., Ltd.

ANNEX B: Test Setup Photos

The Test Setup Photos are submitted separately.

This report shall not be reproduced except in full, without the written approval of TA Technology (Shanghai) Co., Ltd.