USER MANUAL

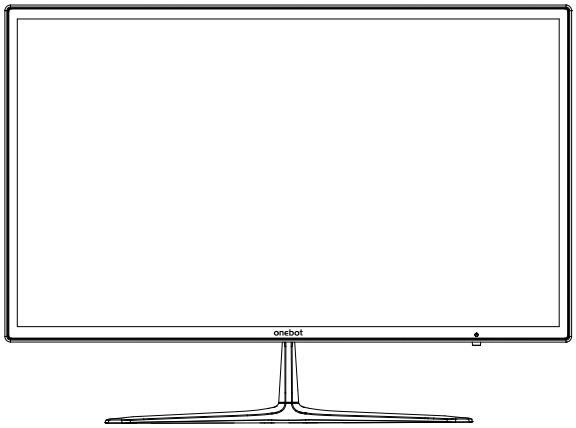

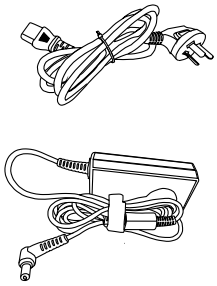

L2416 accessory bag power cable/adapter

Attention

★The power cable is different according to different countries.

★If any items are lost or damaged, please contact the original purchase.

A. Product Dimension

L2416

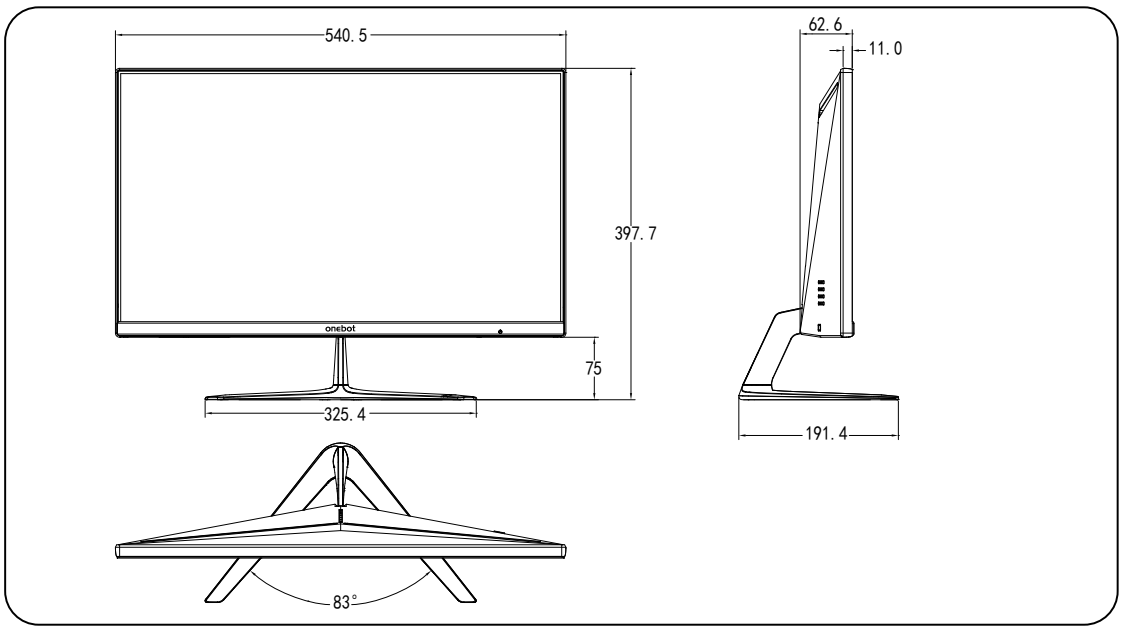

B. User Note

Please read this manual before operating the product, and keep the instructions well, so that you can read it in the future.

Attention:

1. Any changes or modifications are not authorized by the authority may make it impossible to operate the product.
2. In order to meet the radiation limit, you have to use shielding signal lines and AC power lines.
3. The manufacturer shall not be responsible for any radio or electrical interference caused by unauthorized modifications.

Warning:

To prevent a fire or explosion, do not put the product to rain or moisture environment, the product exists dangerous high pressure inside, do not open the shell, if service is required for professional maintenance personnel.

Preventive Measure

★Do not keep the product near water, such as a bathroom, dishwasher, kitchen, washing machine, swimming pool or in a wet basement.

★Do not put the product on the unstable car, chair, table, if the product falls, it will hurt the user, and may lead to the loss of equipment. If the product is fixed on the wall or on the shelf, the fixed installation must be recognized by the manufacturer.

★There are many narrow openings in the upper and lower parts of the rear shell. In order to ensure the continuous operation of the product without overheating, these vents can not be blocked or covered. So the product can not be placed on a bed, sofa, blanket or similar thing on the surface, not close to the above radiator or heat source. Do not put it in a bookcase or box unless it is protected.

★Supply voltage range identification of product operations is on the label of the back shell, if you can not confirm the voltage supply, you can contact your dealer or the local power company.

★This product is equipped with a three phase grounding plug, one of which is grounded. For safety reasons, the plug should be inserted into the ground power outlet, if the three-phase plug can not be inserted into your socket, please find a electrician to install a correct socket, or use the adapter to secure the equipment grounding. Do not change the safety function of grounding plug.

★When the product is not used for a long time, please cut off the power supply. This prevents loss of electric shock and abnormal power supply voltage during thunderstorms.

★Do not overload the socket or cause a fire or electric shock.

★Do not put foreign body into the machine, it can cause short circuit and cause fire or electric shock.

★Can not open the rear shell, so as not to be subjected to high pressure or other hazards. If there is a fault, please contact the after-sale service personnel directly.

★To ensure safe operation, make sure the supply voltage is 200-240VAC.

★Insert the plug of the product to the most convenient connection of the power outlet.

Special precautions

May occur following the problem is a normal phenomenon, does not mean that the product has problem.

Attention

★Due to the characteristics of the product, the first use of the screen may flicker. Please close and reopen to ensure that the screen is not flashing.

★When you use a different desktop drawing, there may be a slight uneven brightness of the screen.

★The effective pixels of the screen can reach or exceed 99.99%. However, there will be 0.01% or less pixel loss or brightness loss.

★Because of the characteristics of products, when the same image shows a long time after switching the image, may continue to retain the previous. In this case, the screen will be slowly restored by changing the image or shut down the power supply for hours.

★When the screen is black, flashing or not lit, please contact the dealer or service center to replace the relevant parts. Avoid self replacement!

Instructions before use

characteristics

★Windows display screen clear and bright

★Recommended resolution 1920x1080@60Hz

★Ergonomics design

★Compact, space saving

★LED backlight, energy saving and environmental protection,

★No mercury pollution slim fashion appearance, space saving, plug and play

Packing list

1 product specification 2 product warranty card 3 power cord 4 adapter

C. Basic operation instruction

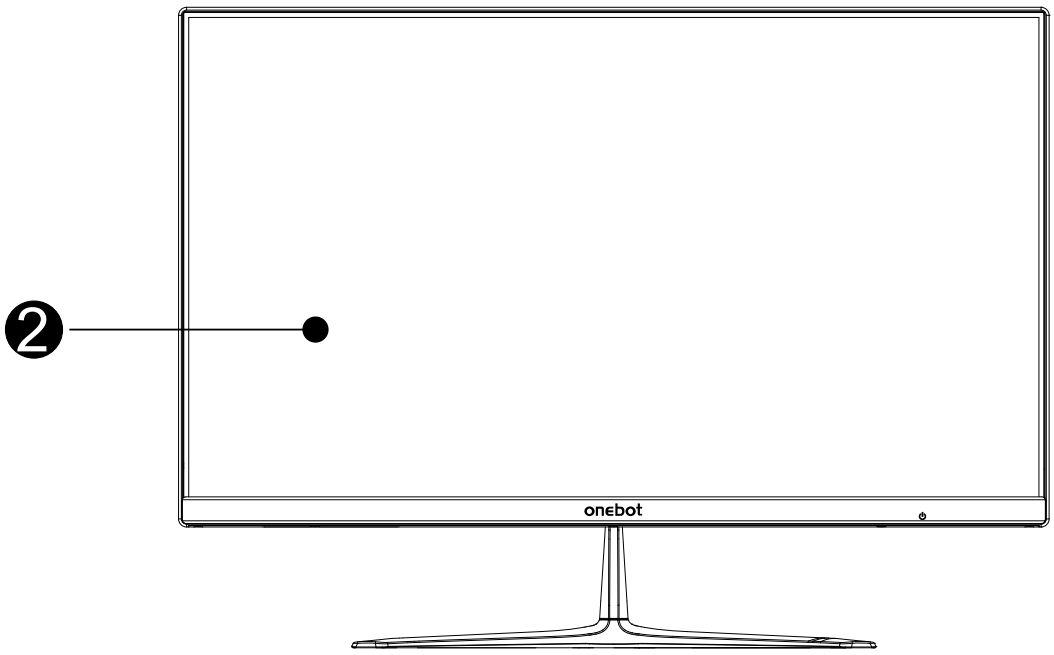

1) The power switch

Press the switch to turn on or off the computer.

2) LCD screen

High Definition LCD screen allows you to view photos, videos or other multimedia files

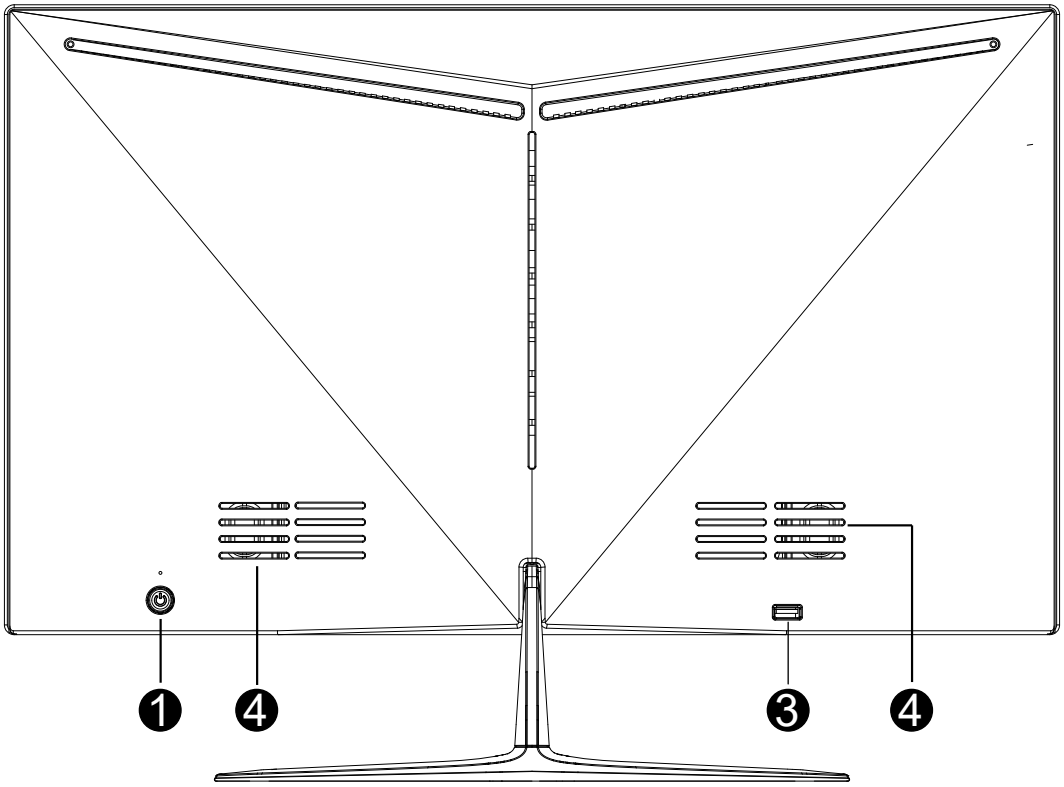

on your computer to provide excellent visual effects.

3) USB 2.0 ports

USB 2.0 ports can be connected for the USB 2.0 specification of the equipment, such as keyboard, camera, printer, scanner and mobile storage equipment etc.

4) 2*5W hi fi speaker

2*5W hi fi speakers to facilitate you to watch the video or listen to music to get a better visual effect.

Adjust angle of view

★The ideal angle of view is recommended to the front of the product, and then adjust the angle of the product according to your request.

★When you adjust the angle of the product, press and hold the base and adjust the position of the front frame.

★You can adjust the angle of the product from -5 degrees to 10 degrees.

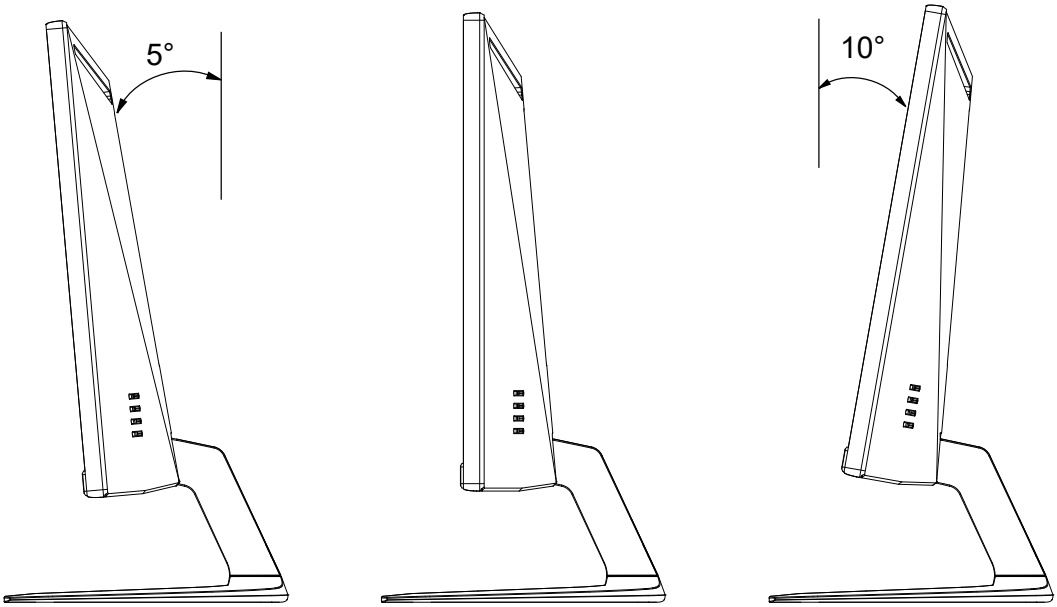

D. Product specifications and accessories

Display	23.8 inches 1920 x 1080/60Hz
CPU	Intel Celeron "quad core"
Multimedia equipment	2*5W hi fi speaker
Network	Wireless Lan Driver Support 802.11 b/g/n network interface card 1000Mbps ethernet card

E. Product installation / instructions

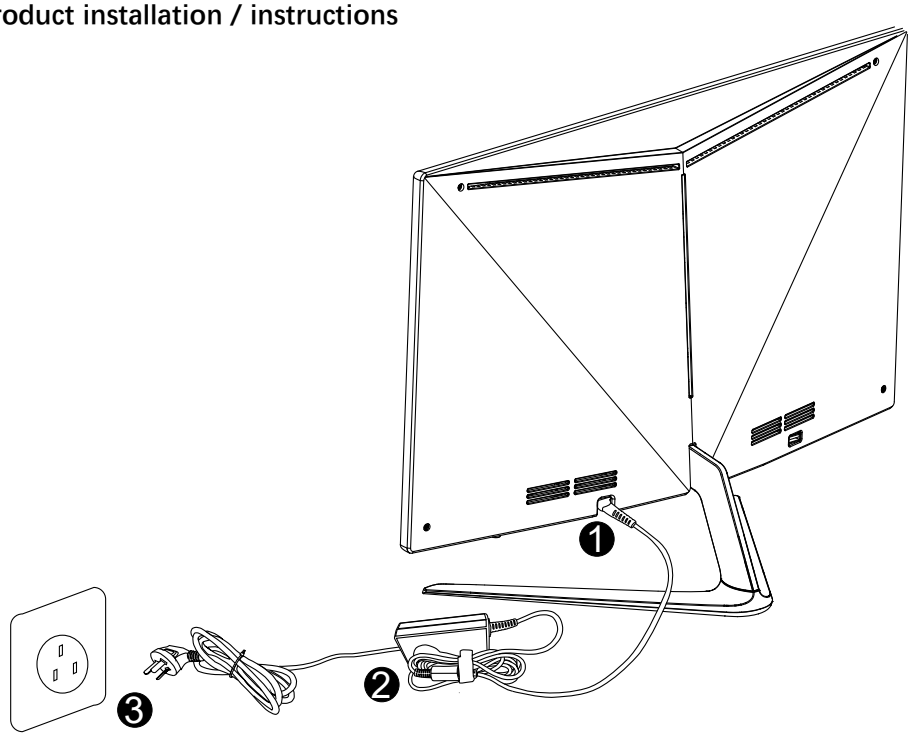

1) Input the DC power plug on the adapter to the computer power input jack (DC).
2) Connect the AC adapter plug to the AC/DC adapter.
3) Plug the AC adapter into the 100V~240V power outlet.
4) Press the power switch on the computer.

FCC Warning:

This equipment has been tested and found to comply with the limits for a Class B digital device, pursuant to part 15 of the FCC Rules. These limits are designed to provide reasonable protection against harmful interference in a residential installation. This equipment generates, uses and can radiate radio frequency energy and, if not installed and used in accordance with the instructions, may cause harmful interference to radio communications. However, there is no guarantee that interference will not occur in a particular installation. If this equipment does cause harmful interference to radio or television reception, which can be determined by turning the equipment off and on, the user is encouraged to try to correct the interference by one or more of the following measures:

- Reorient or relocate the receiving antenna.
- Increase the separation between the equipment and receiver.
- Connect the equipment into an outlet on a circuit different from that to which the receiver is connected.
- Consult the dealer or an experienced radio/TV technician for help.

Caution: Any changes or modifications to this device not explicitly approved by manufacturer could void your authority to operate this equipment.

This device complies with part 15 of the FCC Rules. Operation is subject to the following two conditions: (1) This device may not cause harmful interference, and (2) this device must accept any interference received, including interference that may cause undesired operation.

To comply with FCC RF exposure compliance requirements, this grant is applicable to only mobile configurations. The antennas used for this transmitter must be installed to provide a separation distance of at least 20 cm from all persons and must not be co-located or operating in conjunction with any other antenna or transmitter.