HYDRO-RAIN®

Built for Speed™

HRC-100-RS-RF

Wireless Rain/Freeze Sensor

INSTRUCTION MANUAL

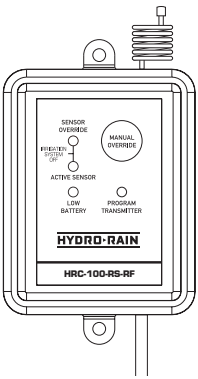

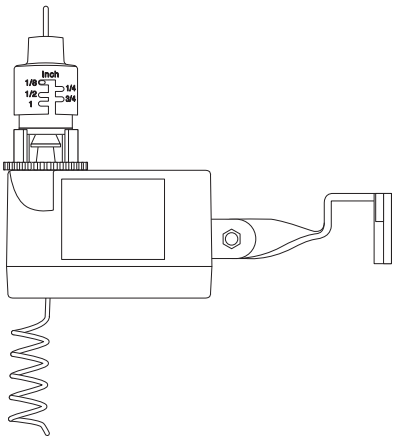

08HYD005598 04008-24 rA.indd 1 11/16/07 3:39:35 PM

Table Of Contents

Section 1: INTRODUCTION 03
Section 2: INSTALLATION INSTRUCTIONS 06
Section 3: OPERATION CHECKS 10
Section 4: ADJUSTMENTS AND OPERATION 12
Section 5: MAINTENANCE AND TROUBLESHOOTING 17

08HYD005598 04008-24 rA.indd 2 11/16/07 3:39:35 PM

Section 1: INTRODUCTION

Thank you for selecting a Hydro-Rain® Wireless Rain/Freeze Sensor (HRC-100-RS-RF). This Hydro-Rain® Sensor provides conservation, convenience, and flexibility to your fully automatic watering system. After a set amount of rain has fallen, the sensor will send a wireless signal to the receiver and prevent the timer from watering. When the freeze sensor option switch is activated the sensor interrupt s watering when the temperature drops on or below 37°F ± 2° (3°C ± 1°).

Please read this manual completely before you install and use the sensor.

A Few of the Notable Design Features Include:

RF Communication

RF (Radio Frequency) technology eliminates unsightly wires and simplifies mounting.

Battery Power

The rain/freeze sensor is powered by two replaceable 3V lithium batteries.

Feature Control Switch

Located on the bottom of the transmitter, the 3-position control switch allows you to select Rain Sensor, Rain/Freeze Sensor and Sensor Off.

08HYD005598 04008-24 rA.indd 3 11/16/07 3:39:35 PM

Section 1: INTRODUCTION

1. Manual Test Stem
Pushing downward on stem tests transmitter communication with the receiver.

2. Rain Fall Adjustment Cap
Range adjusts from ⅛" to 1" (3mm to 25mm). This setting will prevent watering when rainfall reaches the specified setting.

3. Vent Ring
An adjustable ring is designed to control the rain delay duration.

4. Communication Antenna
Transmits a wireless signal (up to 200') to the rain/freeze receiver.

5. Mounting Brackets
Attach to gutter or flat surface.

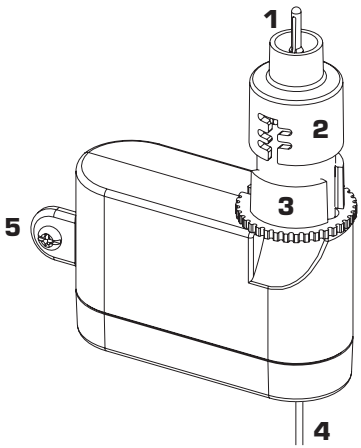

Figure 1: Rain/Freeze Transmitter

08HYD005598 04008-24 rA.indd 4 11/16/07 3:39:35 PM

6. Communication Antenna
Receives wireless signal from the rain/freeze sensor.

7. Manual Override Button
Functions in two ways:

1. Stops timer from watering
2. Allows watering when rain/freeze sensor is active

See Manual Override (Section 4) for additional detail

LED Panel Lights
Located on the receiver, the LED lights communicate the current status of the sensor. (See Figure 2)

8. Sensor Override LED
Indicates when manual override is on (see manual override above).

9. Active Sensor LED
Indicates when the rain/freeze sensor is overriding the sprinkler timer.

10. Low Battery LED
Indicates when battery needs to be replaced.

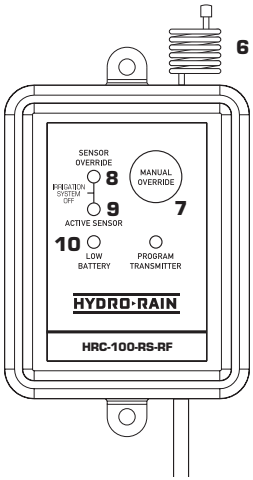

Figure 2: Receiver

08HYD005598 04008-24 rA.indd 5 11/16/07 3:39:36 PM

Section 2: INSTALLATION INSTRUCTIONS

Mounting the Receiver

1. Select a location within 6" adjacent to your sprinkler timer (receiver may be located indoor or outdoor).
2. Mount rain/freeze receiver (antenna side up) using screws provided.
3. Extend and straighten the antenna upward.

Wiring the Receiver to Timer

Important: This sensor is designed for 24-Volt irrigation timers only. Do not connect the receiver to 120/240 VAC. All wiring must conform to applicable local codes. Disconnect power to the sprinkler timer (unplug timer, turn off the appropriate circuit breaker or remove fuse) before attempting to connect the rain sensor receiver.

The two most common wiring situations are detailed below. The green "normal open" wire is not used in most installations. For nonstandard wiring situations, please contact our customer support hotline at 1-888-HYDRORAIN.

24-Volt Solenoid Valves Only (No Booster Pump)

1. Remove wire terminal cover from timer.

2. Check your timer for pre-installed sensor terminals. If the timer does not have sensor terminals, proceed to step 3. If it does, take the wire from rain/freeze receiver and connect the white (common) wire to one sensor terminal and the yellow (normal closed) wire to the other. (See Figure 3) Skip to step 5.

08HYD005598 04008-24 rA.indd 6 11/16/07 3:39:36 PM

3. Disconnect the common valve wire from the timer, and attach it (using a wire nut) to the yellow (normal closed) wire from the rain/freeze receiver. (See Figure 4)

4. Connect the white (common) wire from the rain/freeze receiver to the common terminal of the timer.

5. Connect the (2) red "24V" wires to the 24V terminals of the timer.

24-Volt Solenoid Valves with Booster Pump

Note: The pump circuit output must be 24 volts in this situation—if different, do not proceed.

1. Remove wire terminal cover from timer.

2. Check your timer for pre-installed sensor terminals. If the timer does not have sensor terminals, proceed to step 3. If it does, take the wire from the rain/freeze receiver and connect the white (common) wire to one sensor terminal and the yellow (normal closed) wire to the other. (See Figure 3) Skip to step 5.

3. Disconnect the common valve wire(s) from the timer and the common wire lead of the relay that starts the pump from the common terminal of the timer. Attach them to the yellow (normal closed) wire from the receiver, using a wire nut. (See Figure 5).

4. Connect the white (common) wire from the rain/freeze receiver to the common terminal on the timer.

5. Connect the (2) red "24V" wires to the 24V terminals of the timer.

08HYD005598 04008-24 rA.indd 7 11/16/07 3:39:36 PM

Section 2: INSTALLATION INSTRUCTIONS

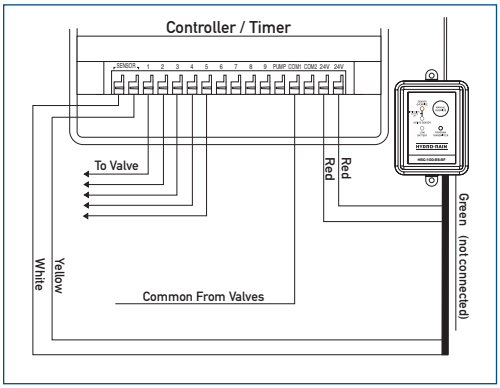

Figure 3: Wiring sprinkler timer with sensor terminals without booster pump

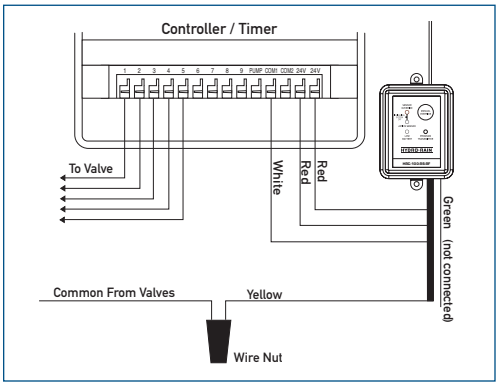

Figure 4: Wiring sprinkler timer without sensor terminals with booster pump

08HYD005598 04008-24 rA.indd 8 11/16/07 3:39:37 PM

Section 2: INSTALLATION INSTRUCTIONS

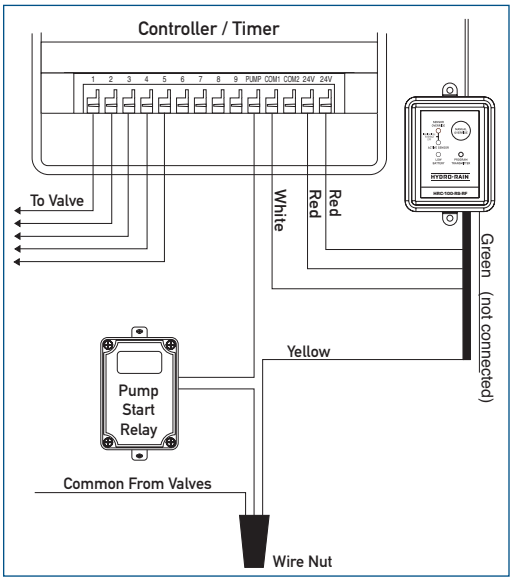

Figure 5: Wiring sprinkler timer with booster pump without sensor terminals

08HYD005598 04008-24 rA.indd 9 11/16/07 3:39:37 PM

Section 3: OPERATION CHECKS

Verify Correct Wiring

Select a sprinkler station/zone that is visible and in reach of the rain/freeze receiver and sprinkler timer. After manually activating the station/zone, on the sprinkler timer, press the “Manual Override” button on the receiver. The top light should indicate that the system is being overridden. If the light does not illuminate, check the red wire connections. If the light is illuminated then the zone watering (and the pump, if installed) should shut off. If the zone continues to water check the white and yellow (or green) wire connections.

Verify Communication Between the Transmitter and Receiver

Verify that the control switch, located on the bottom of the transmitter, is set on either the “Rain” or “Rain/Freeze” position. Next, press the manual test stem on the transmitter until you hear a light click. While holding the test stem down verify that the receiver “Sensor Active” light is illuminated. If the light is illuminated, the communication is set. If the light does not illuminate, press and hold the “Transmitter Program” button for at least two seconds. Once all three lights are illuminated, press the manual test stem repeatedly until the three lights start flashing. When the lights stop flashing press the manual test stem again, the “Sensor Active” light should illuminate. If problems persist check your wiring or call our technical support group.

08HYD005598 04008-24 rA.indd 10 11/16/07 3:39:38 PM

Section 3: OPERATION CHECKS

Mounting the Transmitter

Mount the rain/freeze sensor to a gutter with the provided thumb screw, or to a flat surface, with provided screws, where it will be exposed to direct, unobstructed rainfall (but away from sprinkler spray). The test stem must be upright. Note: The distance that the transmitter and receiver will operate at is approximately 200 feet line of sight. This distance may be affected by obstacles such as walls, automobiles, metal siding, etc.

Hints for Mounting:

1. Mount the transmitter in the highest possible position where rain can fall directly upon the rain sensor.

2. The transmitter mounting location will affect the reset rate, the amount of time it takes the rain sensor to dry out sufficiently for the sprinkler system to reactivate. For example, mounting the rain sensor on a very sunny, south-eastern end of a house may cause the rain sensor to dry out sooner than desired. Similarly, mounting on the northern end of a building with constant shade may keep the rain sensor from drying out at all. Some experimentation with the "vent ring" (described in the "Adjustments and Operation" section 4) will usually yield satisfactory results.

08HYD005598 04008-24 rA.indd 11 11/16/07 3:39:38 PM

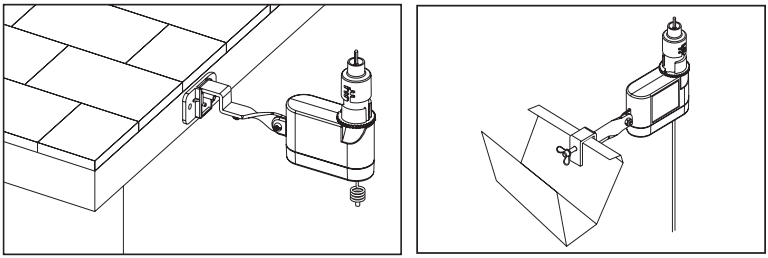

Figure 6: Attaching sensor/transmitter to gutter or flat surface

Rain Sensor

The rain sensor keeps the irrigation system from starting or continuing after rainfall quantities of ⅛", ¼", ½", ¾", or 1". We recommend that the sensor be set at the ½" setting. To adjust to the desired quantity of rainfall, rotate the cap on the switch housing so that the pins are located in the proper slots. Do not forcibly twist the cap as this might break the pins. The time that it takes the rain sensor to reset for normal sprinkler operation after the rain has stopped is determined by weather conditions (wind, sunlight, humidity, etc.). These conditions will determine how fast the hygroscopic discs dry out, and since the landscape is also experiencing the same conditions, their respective drying rates will roughly parallel each other. There is an adjustment capability on the rain sensor that will slow down the rest rate. By turning the “vent ring” to

08HYD005598 04008-24 rA.indd 12 11/16/07 3:39:39 PM

completely or partially cover the ventilation holes, the hygroscopic discs will dry more slowly. This adjustment can compensate for an “overly sunny” installation location or peculiar soil conditions. Experimenting with the vent rings will best determine the ideal vent setting. (See Figure 7)

Freeze Sensor

The temperature at which the freeze sensor is activated is 37°F ±2° (3°C ±1°) and is not adjustable. The freeze sensor feature can be bypassed by moving the switch (located on the bottom of the rain/freeze sensor) to the “Rain” position.

Manual Override

The Manual Override button can be used in 2 functions:

1. Running the sprinkler timer when rain/freeze sensor is active (Deactivating the sensor)
2. To stop timer from watering (Deactivating sensor and timer)

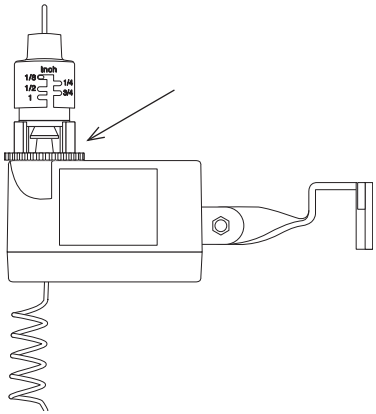

Figure 7: Rain and vent ring adjustments

08HYD005598 04008-24 rA.indd 13 11/16/07 3:39:39 PM

Running the Sprinkler Timer when Rain/Freeze Sensor is Active (see Figure 8)

1. Make sure “Active Sensor” is the only LED illuminated (on the rain/freeze receiver).

2. Push the “Manual Override” button–“Sensor Override” LED will illuminate and “Active Sensor” LED will turn off.

3. To restore rain/freeze sensor function push “Manual Override” again–“Sensor Override” LED will turn off.

Stop Sprinkler Timer from Watering (see Figure 9)

1. Make sure “Active Sensor” and/or “Sensor Override” is/are not illuminated (on the rain/freeze receiver).
Important: If “Active Sensor” is illuminated, do not push “Manual Override” (this will engage the function above). If you need to shut your irrigation system down, turn your timer to the off position.

2. Push the “Manual Override” button–both “Sensor Override” and “Active Sensor” will illuminate (on the rain/freeze receiver).

3. To restore sprinkler timer function, push “Manual Override” again–“Sensor Override” will turn off.

Fig
wh

08HYD005598 04008-24 rA.indd 14 11/16/07 3:39:40 PM

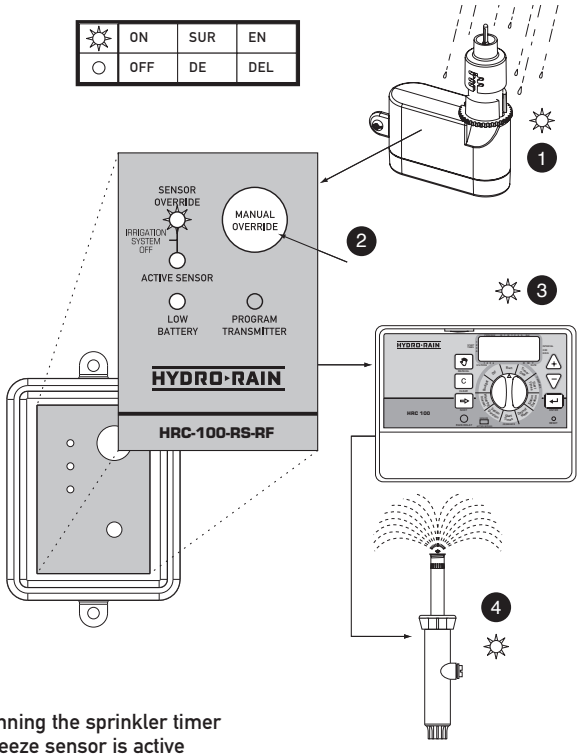

Figure 8: Running the sprinkler timer when rain/freeze sensor is active

08HYD005598 04008-24 rA.indd 15 11/16/07 3:39:40 PM

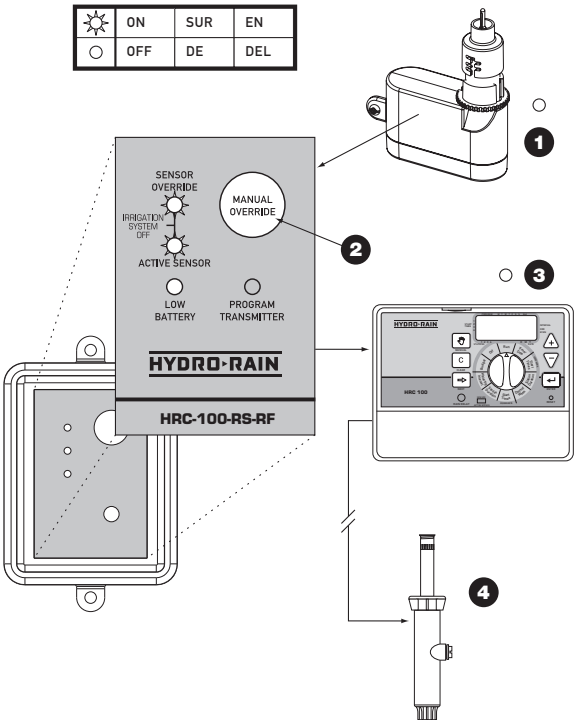

Figure 9: To stop timer from watering

08HYD005598 04008-24 rA.indd 16 11/16/07 3:39:41 PM

Section 5: MAINTENANCE AND TROUBLESHOOTING

Maintenance

The two lithium 3V batteries (CR2032) will need to be changed as needed. There is a low battery indicator light on the receiver that tells you when you need to change the battery. To change the batteries, remove the black rubber cover from underneath the sensor/transmitter. The battery mount should drop down, attached with a wire. Replace both batteries, making sure the + side of the batteries point to the + indicated on the mount. Insert the battery mount and replace cover, making sure it's seated properly.

Neither the rain nor freeze sensor needs to be removed or covered during the winter. All parts are easily replaceable if they become damaged or lost. The spindle assembly is designed to stay with the cap. Do not pull them apart.

Follow These Simple Checks Before Replacing Your Rain/Freeze Sensor:

System Will Not Come On At All:

A. Check to see that the rain sensor discs are dry and the switch "clicks" on and off freely by pressing the top of the spindle.

B. Check the feature control switch to make sure it is switched to the "rain" setting or the "rain/freeze" setting.

08HYD005598 04008-24 rA.indd 17 11/16/07 3:39:42 PM

C. Toggle the manual override switch on the receiver to change status.

D. If you have a timer with built-in sensor terminals there is usually a bypass switch located near the terminals, check that the switch is set to "ON."

E. Check that the temperature is at least 39°F (4°C) or higher.

System Will Not Shut Off Even After Heavy Rainfall:

A. Check wiring for correct installation (See "Operation Checks: Verify Correct Wiring").

B. Check sensitivity setting on rain sensor, and move the cap to a more sensitive setting. The rain sensor is an accurate rain gauge and can be verified by setting up a "tube" type rain gauge in the same vicinity and making periodic readings.

C. Check for obstructions to rainfall such as overhangs, trees, or walls.

D. Check the batteries.

E. If your controller has a rain bypass switch make sure it is in the correct position to allow the sensor to communicate with the controller.

F. Toggle the manual override switch on the receiver to change status.

Help: Before returning this timer to the distributor, contact Hydro-Rain® Technical Service at: 1-888-HYDRORAIN.

08HYD005598 04008-24 rA.indd 18 11/16/07 3:39:42 PM

This device complies with Part 15 of the FCC Rules. Operation is subject to the following two conditions: (1) This device may not cause harmful interference, and (2) this device must accept any interference received, including interference that may cause undesired operation.

NOTE: This equipment has been tested and found to comply with the limits for a Class B digital device, pursuant to Part 15 of the FCC Rules. These limits are designed to provide reasonable protection against harmful interference in a residential installation. This equipment generates uses and can radiate radio frequency energy and, if not installed and used in accordance with the instructions, may cause harmful interference to radio communications. However, there is no guarantee that interference will not occur in a particular installation. If this equipment does cause harmful interference to radio or television reception, which can be determined by turning the equipment off and on, the user is encouraged to try to correct the interference by one of the following measures:

- Reorient or relocate the receiving antenna.
- Increase the separation between the equipment and receiver.
- Connect the equipment into an outlet on a circuit different from that to which the receiver is connected.
- Consult the dealer or an experienced radio/TV technician for help.

WARNING: Any changes or modifications not expressly approved by the party responsible for compliance could void the user's authority to operate this equipment.

The device must not be co-located or operating in conjunction with any other antenna or transmitter.

08HYD005598 04008-24 rA.indd 19 11/16/07 3:39:42 PM

08HYD005598 04008-24 rA.indd 20 11/16/07 3:39:42 PM

HYDRO▸RAIN®

Built for Speed™

915 Overland Street
North Salt Lake, UT 84054

1.888.HYDRORAIN

www.hydrorain.com

Model 04008-24 rA

08HYD005598 04008-24 rA.indd 21 11/16/07 3:39:43 PM

FLUID

P 801 295 9820
F 801 951 5815
www.fluid-studio.net
1065 South 500 West
Bountiful, Utah 84010

PROOF NO: 2

DATE: 11.16.07

DES: SM **SPCK:** SM

JOB NO: 08HYD005598

CLIENT: Orbit

SKU: 04008

UPC: ? ????? ????? ?

FILE NAME: 08HYD005598 04008-24 rA.indd

SOFTWARE: InDesign CS2

DIMENSIONS:

FLAT: W: 5" **H:** 5.25"

FINISHED: W 5" **D:** " **H** 5.25"

COLORS

Registration

color non printing

color non printing

K

PMS 2955

PMS ????

PMS ????

ADDITIONAL INSTRUCTIONS:

- Font sizes cannot be smaller than 7 pt.
-
-

Printers are responsible for meeting print production requirements. Any changes must be approved by the client and Fluid Studio. **PRINTED PIECE MUST MEET DESIGNATED SPECIFICATIONS ON THIS FORM.**

© 2007 Fluid Studio. This work is the property of Fluid Studio, and cannot be used, reproduced or distributed in any way without their express permission.