尺寸：60x90mm

3 in 1 Magnetic Wireless Charger User Manual

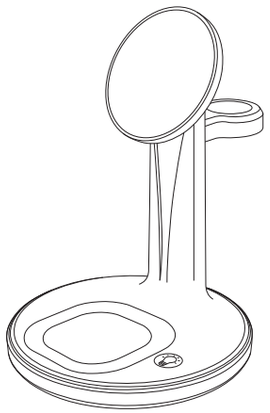

Specifications:

- **Model:** A02
- **Input:** 5V-9V⎓ 2.2A(MAX)
- **Magnetic Wireless Charge:** Advanced magnetic charging technology. Easily attach and perfectly align for wireless charging. Charge and play at the same time.
- **3-in-1 Design:** Charge your iPhone 12/13/14 and Airpods, Watch simultaneously. Perfect for a nightstand.
- **5 Charging Modes:** 15W, 10W, 7.5W, 5W and 2.5W for various Qi-enabled devices.
- **Vertical Stand Design:** The stand fixed angle to provide you comfortable viewing angle, and enjoy programs or video calls.

Product features:

1. 3-in-1 wireless charging station making it simple to charge your iPhone, Apple Watch, and AirPods.
2. With intelligent indicator light on the charging stand to indicate the charging status.
3. Built-in intelligent chipset provides over-current, over-voltage, and over-temperature protection, safeguarding your devices while charging.
4. Easy to operate, magnetic wireless charging can accurately align with the phone's charging point, achieving stable and fast charging.
5. Weighted base keeps your device more stable, no worry about being knocked down.

Product Parameter:

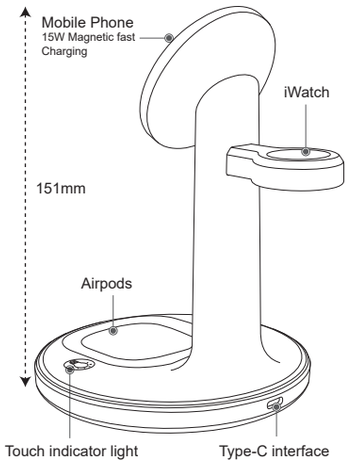

How to Use:

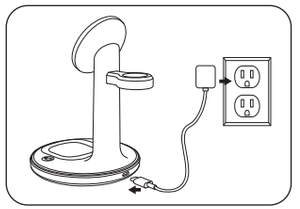

1. Connect to a power adapter.

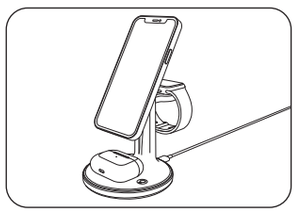

2. Attach your iPhone 12/13/14 to the top magnetic pad, and place your Charge your phone, Apple Watch, AirPods.

Attention:

* Do not disassemble the device.
* Please make sure your device is Qi-compatible or has a Qi receiver kit (not included).
* Your phone should be MagSafe compatible or equipped with a magnetic plate or phone case in order to achive the magnetic charging effect. (such as a magnetic protective case).
* A Quick Charger adapter and cable are required for the fast wireless charging features. (Power adapter is sold separately)
* Do not use or store the magnetic wireless charger in a hot or humid environment as it may damage the circuit.
* A magnet may interfere with the magnetic charging of the product or cause malfunctions; To avoid interference between. other devices and products, please keep magnetic chip cards (such as ID cards, credit cards) or medical devices (such as pacemakers,defibrillators, hearing aids, etc.) away from the product.Keep a distance of at least 20 cm from the product, and more than 30 cm during wireless charging.

* LED Indicator Status
  - · Power on -- Light keeps on after three times fast flashes.
  - · Standby Mode -- Light keeps on, can touch indicator to let light off.
  - · Charge One Device Individually -- Light keeps on.

三合一磁性无线充电座 说明书

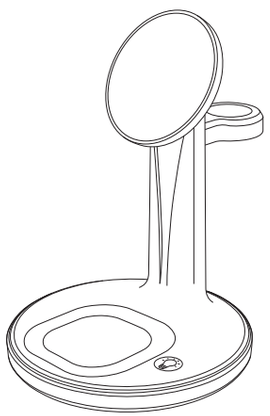

产品规格：

- 型号：A02
- 输入：5V-9V⎓ 2.2A(MAX)
- 磁性无线充电：先进的磁充电技术。轻松连接，完美对准无线充电。在同一时间充电和玩。
- 三合一设计：为iPhone 12/13/14和Airpods充电，同时观看。完美的床头柜。
- 5种充电模式：15W，10W，7.5W，5W和2.5W，适用于各种Qi设备。
- 立式支架设计：支架固定角度，为您提供舒适的观看角度，享受节目或视频通话。

产品特点：

1. 三合一无线充电站，让你的iPhone、Apple Watch和AirPods都能轻松充电。
2. 充电座上配有智能指示灯，指示充电状态。
3. 内置智能芯片组提供过流、过压和过温保护，在充电时保护您的设备。
4. 磁性无线充电操作简单，能准确对准手机的充电点，实现稳定快速充电。
5. 加重底座让你的设备更稳定，不用担心被撞倒。

产品参数：

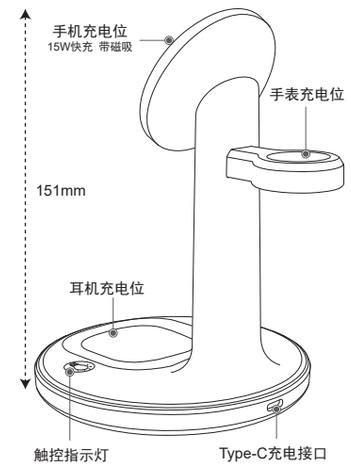

使用方法：

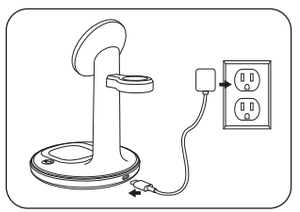

1. 连接电源。

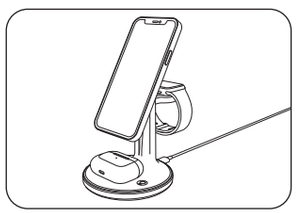

2. 给手机、Apple watch、AirPods充电。

注意：

* 请勿私自拆卸设备。
* 确保您的设备支持Qi无线充电协议或安装符合Qi标准的无线接收器（不包含在内）。
* 要实现手机吸附充电，请确保手机设备带有磁吸功能，或配有磁吸配件（如：磁吸保护壳）。
* 要达到快充，需要使用支持快充的适配器和充电线。
* 请勿在高温或者潮湿的环境下使用或存放该磁吸无线充。
* 磁铁可能会干扰产品的磁吸充电或导致故障；为避免其他设备和产品互相干扰，请将磁性芯片卡（例如D卡，信用卡）或医疗设备（例如心脏起搏器，除颤器，助听器等）与产品保持至少20cm的距离，无线充电时30cm以上。

* 指示灯状态
  - ・通电- 指示灯整体快闪3次常亮。
  - ・待机状态- 指示灯常亮，可以触摸关掉。
  - ・单独充一个 设备- 指示灯常亮。

FCC Statement

This device complies with part 15 of the FCC Rules. Operation is Subject To the following two conditions:

(1) This device may not cause harmful interference, and (2) this device must accept any interference received, including interference that may cause undesired operation.

Changes or modifications not explicitly approved by the party responsible for compliance could void the user's authority to operate this equipment.

Note: this equipment has been tested and found to comply with the limits for a Class B digital device, pursuant to part 15 of the FCC Rules. These limits are designed to provide reasonable protection against harmful interference in a residential installation. This equipment generates, uses and candidate radio frequency energy and, if not installed and used in accordance with the instructions, may cause harmful interference to radio communications. However, there is no guarantee that interference will not occur in a particular installation. If this equipment does cause harmful interference to radio or television reception, which can be determined by turning the equipment off and on, the user is encouraged to try to correct the interference by one or more of the following measures:

- Reorient or relocate the receiving antenna.
- Increase the separation between the equipment and receiver.
- Connect the equipment into an outlet on a circuit different from that to which the receiver is connected.
- Consult the dealer or an experienced radio/TV technician for help.

The equipment complies with FCC radiation exposure limits set forth for an uncontrolled environment. During the operation of device a distance of 15 cm surrounding the device and 20 cm above the top surface of the device must be respected.