# Car Fast Wireless Charger

USER MANUAL

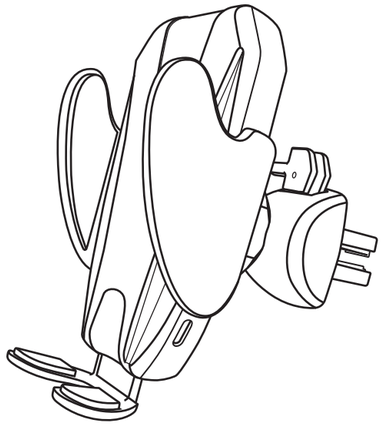

Please read the instructions carefully before using. Pictures are for reference only, Specifications are subject to the physical product

## What is included:

Car Fast Wireless Charger
X 1

Air vent mount
X 1

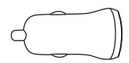

QC3.0 car charger
X 1

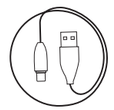

USB cable
X 1

## Features:

- Car holder with wireless charging fuction, charges your phone conveniently when driving
- Power output 10W, compatible with all phones with QI standard.
- Full 360 degrees rotation for perfect viewing angle.
- Start charging once as the phone contact with the holder, no need cable anymore.
- Fix foot support to fit any size of phone, much convenient for use.
- QC 3.0 USB car charger included so you can start charging readily, with over temperature, over current, over voltage muti-safety protection.

## Compatible devices:

- Work well with:
  **Samsung Note 8, Note 9, iPhone XS MAS, Huawei P30 Pro, MIUI9, Samsung S10+, iPhone 8PLus, Samsung S9+, Samsung S8+, iPhone XR, Samsung S10, Samsung S7edge, Samsung S8, iPhone XS, iPhone X, Samsung S9, iPhone 8**
- Also work with all other Qi enabled devices.
- Qi disabled devices with wireless receiver or wireless charging case.
  （Require receiver compliant with WPC Qi standard to match).

## Parameters:

Infrared Sensor Wireless Charger Holder

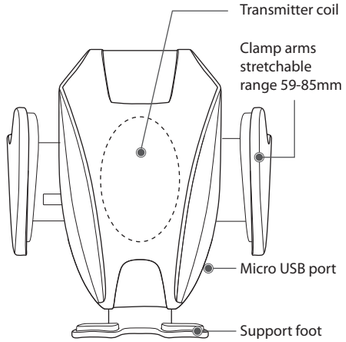


## Parameters:

Air Vent Mount

There are three levels of locking for different size AC vent blades.

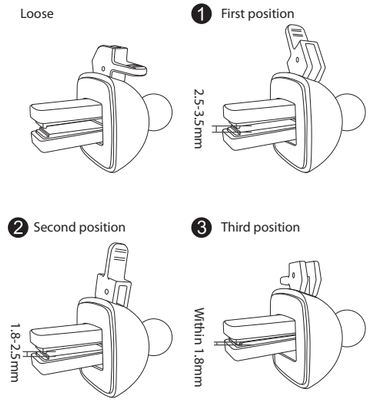


## Product specification:

| Wireless holder | |
|---|---|
| Input voltage | DC 5V/9V |
| Input current | 2A |
| Output power | 10W |
| Frequency | 115-205KHZ |

| QC 3.0 car charger | |
|---|---|
| Input voltage | DC 12-24V |
| Output Current | 5V=3A, 9V=2A, 12V=1.5A |

## LED Mode:

| | |
|---|---|
| Working state | LED light color |
| Power transfer | Red,blue,red blue light turn on by turns for once,then off |
| Standby mode | Light off |
| Charging | Red light keeps on |
| FOD Warning | Red light keeps flashing |
| Charge complete | Red light keeps on |

## Attentions:

- Please use the product correctly according to instructions
- Please do not disassemble the product or throw it to fire and water, to avoid leakage caused by electrical short circuit
- Please do not use wireless charger in high temperature, wet, corrosive environment, to avoid leakage from caused by damaged circuit
- Please do not put wireless charger close to cards with magnetic stripes or chips (ID card, credit card etc.) to avoid demagnetization
- Please keep wireless charger at least 20 CM distance away from implantable medical device (heart pacemaker, Implantable cochlea etc.) to avoid potential interferences
- Please do safekeeping, do not let your kids treat wireless charger as toy to avoid unwanted accidents

The pictures only supplies the reference, please take the actual product as the standard

## Attentions:

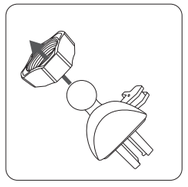

1. Insert the adjuster into the ball joint adapter.

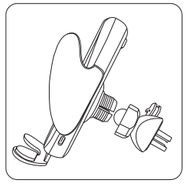

2. Insert the ball into the socket at the back of bracket and tighten.

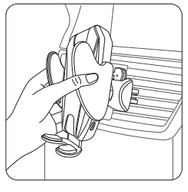

3. Insert the mount directly into the car air vent blade, set the locking switch to proper position.

## Attentions:

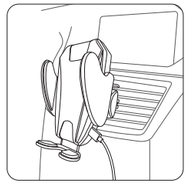

4. Connect the cable micro head to your charge holder.

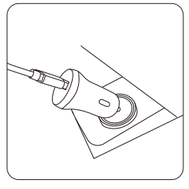

5. Connect the other end to car charger, then insert the car charger to car cigar lighter.

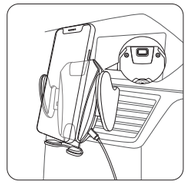

6. Press the switch which behind the bracket, open the bracket.

## Attentions:

7. Press the clamping arm and the phone starts charging.

## FCC Warning:

This device complies with part 15 of the FCC Rules.Operation is subject to the following two conditions:
(1) This device may not cause harmful interference, and (2) this device must accept any interference received, including interference that may cause undesired operation.
Any Changes or modifications not expressly approved by the party responsible for compliance could void the user's authority to operate the equipment. This equipment has been tested and found to comply with the limits for a Class B digital device, pursuant to part 15 of the FCC Rules. These limits are designed to provide reasonable protection against harmful interference in a residential installation. This equipment generates uses and can radiate radio frequency energy and, if not installed and used in accordance with the instructions, may cause harmful interference to radio communications.
However, there is no guarantee that interference will not occur in a particular installation. If this equipment does cause harmful interference to radio or television reception, which can be determined by turning the equipment off and on, the user is encouraged to try to correct the interference by one or more of the following measures:
-Reorient or relocate the receiving antenna.
-Increase the separation between the equipment and receiver.
-Connect the equipment into an outlet on a circuit different from that to which the receiver is connected.
-Consult the dealer or an experienced radio/TV technician for help.
The device has been evaluated to meet general RF exposure requirement. The device can be used in portable exposure condition without restriction.
FCC RF exposure statement:
The equipment complies with FCC Radiation exposure limit set forth for uncontrolled environment.
This equipment should be installed and operated with minimum distance 20cm between the radiator and your body.

FCC ID: 2APCQ-TAC-117