Owner's Manual

Distributed I/O System- Piccolo Interface Unit (PIU) and Piccolo-XR Plus Unit

6802974C40-R

MOTOROLA and the Stylized M Logo are registered in the U.S. Patent and Trademark Office. All other product or service names are the property of their respective owners.

Copyright © 2009 Motorola All Rights Reserved

6802974C40-R

@6802974C40@

COMMERCIAL WARRANTY (STANDARD)

Motorola radio communications products are warranted to be free from defects in material and workmanship for a period of ONE (1) YEAR, (except for crystals and channel elements which are warranted for a period of ten (10) years), from the date of shipment. Parts, including crystals and channel elements, will be replaced free of charge for the full warranty period but the labor to replace defective parts will only be provided for one Hundred-Twenty (120) days from the date of shipment. Thereafter purchaser must pay for the labor involved in repairing the product or replacing the parts at the prevailing rates together with any transportation charges to or from the place where warranty service is provided. This express warranty is extended by Motorola Communications and Electronics Inc., 1301 E. Algonquin Road, Schaumburg, Illinois 60196, to the original purchaser only, and only to those purchasing for purpose of leasing or solely for commercial, industrial, or governmental use.

THIS WARRANTY IS GIVEN IN LIEU OF ALL OTHER WARRANTIES EXPRESS OR IMPLIED WHICH ARE SPECIFICALLY EXCLUDED, INCLUDING WARRANTIES OF MERCHANTABILITY OR FITNESS FOR A PARTICULAR PURPOSE. IN NO EVENT SHALL MOTOROLA BE LIABLE FOR INCIDENTAL OR CONSEQUENTIAL DAMAGES TO THE FULL EXTENT SUCH MAY BE DISCLAIMED BY LAW.

In the event of a defect, malfunction or failure to conform to specifications established by seller, or if appropriate, to specifications accepted by Seller in writing, during the period shown, Motorola, at its option, will either repair or replace the product or refund the purchase price thereof, and such action on the part of Motorola shall be the full extent of Motorola's liability hereunder.

This warranty is void if:

a. the product is used in other than its normal and customary manner;

b. the product has been subject to misuse, accident neglect or damage;

c. unauthorized alterations or repairs have been made, or unapproved parts used in the equipment.

This warranty extends only to individual products, batteries are excluded, but carry their own separate limited warranty. Because each radio system is unique, Motorola disclaims liability for range, coverage, or operation of the system as a whole under this warranty except by a separate written agreement signed by an officer of Motorola.

Non-Motorola manufactured products are excluded from this warranty, but subject to the warranty provided by their manufacturers, a copy of which will be supplied to you on specific written request.

To obtain performance of this warranty, purchaser should contact a Motorola salesperson, or Motorola at the address shown above, attention: Quality Assurance Department.

This warranty applies only within the United States.

COMPUTER SOFTWARE COPYRIGHTS

The Motorola products described in this instruction manual may include copyrighted Motorola computer programs stored in semi conductor memories or other media. Laws in the United States and other countries preserve for Motorola certain exclusive rights for copyrighted computer programs including the exclusive right to copy or reproduce in any form the copyrighted computer program. Accordingly, any copyrighted Motorola computer programs contained in the Motorola products described in this instruction manual may not be copied or reproduced in any manner without the express written permission of Motorola. Furthermore, the purchase of Motorola products shall not be deemed to grant either directly or by implication, estoppel, or otherwise, any license under the copyrights, patents or patent applications of Motorola, except for the normal non-exclusive, royalty free license to use that arises by operation of law in the sale of a product.

EUROPEAN UNION DIRECTIVE 2002/95/EC CONFORMANCE STATEMENT

Hereby, Motorola declares that these products are in compliance with the essential requirements and other relevant provisions of Directive 2002/95/EC - Restriction of Hazardous Substances Directive.

This page left intentionally blank.

CONTENTS

CONTENTS I

INTRODUCTION 1
Scope of this Manual 1
General Description. 1
Safety Handling Instructions 5

INSTALLATION 7
General 7
PIU Installation 8
Mounting the PIU On A Wall Using Screws 9
Mounting the PIU Using a Bracket 10
PIU DIN Rail Mounting 11
PIU Electrical Connections 12
PIU Antenna Connection 18
Piccolo XR Plus Installation 19
Piccolo XR Plus Screw Mounting Options 20
Piccolo XR Plus Electrical Connections 22

THE DIOS PIU AND PICCOLO-XR Plus UNITS 27
PIU Overview 27
PIU Communication Ports 28
PIU Connectors 29
PIU LED Operation 29
PIU Adapter Operation 30
Piccolo XR Plus Overview 35
Piccolo XR Plus Communication Ports 35
Piccolo XR Plus Connector 36

APPENDIX A: PIU and PICCOLO-XR Plus SPECIFICATIONS 37

PIU Specifications.....37

Environmental 37

Mechanical 37

PIU Board.....38

Power.....39

PICCOLO XR Plus Specifications.....42

Environmental 42

Mechanical 42

PICCOLO XR Plus Board 42

Communication Ports 43

Power.....44

Regulatory Standards 46

Radio Network Freq Band Rated Power 46

APPENDIX B: MODELS and ACCESSORIES 49

General 49

APPENDIX C: ANTENNA..... 51

General 51

Flexible Antenna Specifications.....51

Pole Antenna 52

Pole Antenna installation 53

APPENDIX D: PIU/PICCOLO–XR Plus MOUNTING TEMPLATES 57

INTRODUCTION

Scope of this Manual

This manual provides instructions for the installation and operation of the Distributed I/O system Piccolo Interface Unit (PIU) and Piccolo XR Plus units. The Distributed I/O System includes PIUs and Piccolo XR Plus. Each PIU can be linked to up to 256 Piccolo XR Plus. For more information on the PIU and Piccolo XR Plus, see the online help of the DIOS Service Toolkit.

General Description

The Distributed I/O System (DIOS) is a self-sustained system designed to function within the IRRInet irrigation control product line.

The DIOS consists of the following components:

- Piccolo Interface Unit (PIU)
- Piccolo XR Plus Units

The PIU functions as an interface between the host application (irrigation SW and HW) and the Piccolo XR Plus units. The PIU and Piccolo XR Plus are portable devices, which are used in fixed installations. The PIU uses one of its communication ports to link to the host application and radio communication to link to the Piccolo XR Plus units. Figure 1 provides a general view of the DIOS System.

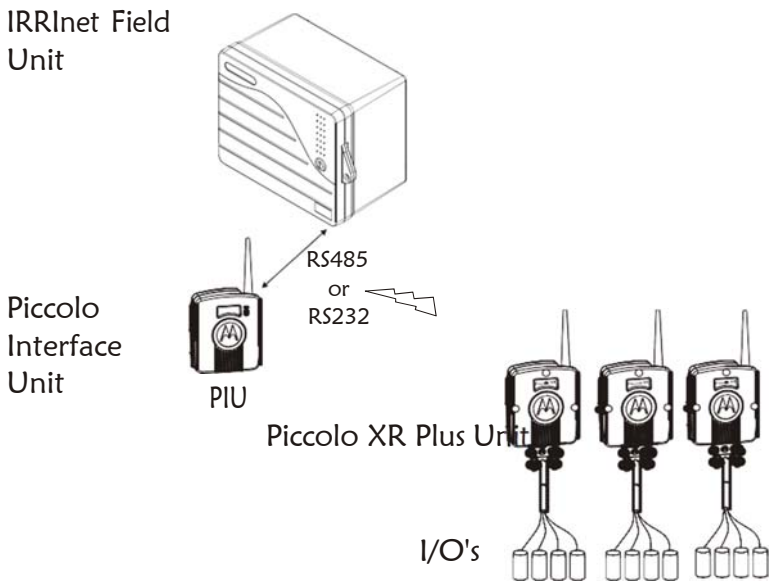

Figure 1
DIOS –General System View

The battery-operated Piccolo XR Plus unit is available in various models with different options of Inputs and Outputs. The Piccolo XR Plus unit can operate DC latch solenoids (outputs), read status and calculate flow of dry contact meters (inputs).

The units are equipped with built-in radio for communication with the PIU.

The DIOS automatically builds communication network, using Store and Forward (S&F) technology, enabling the DIOS to cover areas larger than normally possible when using a single radio to communicate with the PIU.

Using the DIOS, the IRRInet system opens and closes stations (manually or automatically by irrigation programs), reads dry contact input status, calculates flow rate and accumulates pulses from water meters.

PIU - Piccolo Interface Unit

The Piccolo Interface Unit (PIU; see Figure 2) is connected to the IRRInet Field Unit (FU) via RS232 or RS485 serial ports.

Each PIU supports up to 256 Piccolo XR Plus units, with any available I/O combination, limited by the capacity of the IRRInet software only.

Utilizing the S&F technology and networking capabilities, the PIU can be linked to Piccolo XR Plus units positioned in distances of up to 1500-2000 meters (approx. 1 mile), depending on topography, antenna type and antenna installation.

The PIU is an interface between the Piccolo XR Plus and the IRRInet FU, which provides communication and networking operations only. (Monitor and control features are not included in the PIU.) That is: The control and monitor functions are provided either locally, by the Piccolo XR Plus or by an upper hierarchy unit (i.e. IRRInet FU).

The PIU is a portable device, which is used in fixed installations enclosed in an indoor plastic housing.

The PIU must be installed by qualified and authorized technicians, so as to meet applicable safety standards and to ensure protection against weather hazards for the unit.

If the PIU will be connected to outdoor lines, an interface unit, complying with Clause 6 of the UL 60950 standard must be provided.

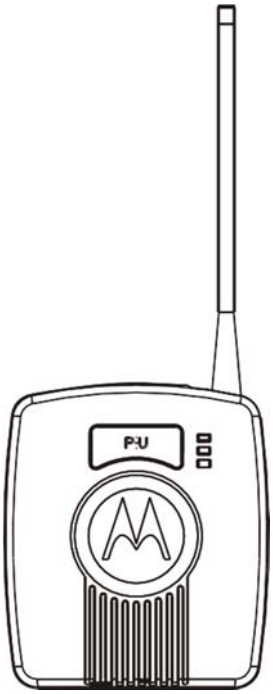

Figure 2
PIU – General View

Piccolo XR Plus

The Piccolo XR Plus is an intelligent, microprocessor based unit that can be used to monitor and control local units in a multi-unit communication network. Piccolo XR Plus units communicate data to a PIU while functioning as intelligent nodes in Distributed I/O monitor and control systems. The Piccolo XR Plus is often used in irrigation and water distribution systems (i.e. irrigation valves, water meters, fertilizing meters, various sensors, flushing filters, and other non-irrigation devices).

The Piccolo XR Plus is ideal for use in applications where very low power consumption is essential. The Piccolo XR Plus is also available in an outdoor resistant housing (IP66), designed to resist harsh environment, such as exposure to sun, dust, and pouring rain.

Figure 3
Piccolo XR Plus – General View

Safety Handling Instructions

For safety handling instructions, see the Product Safety and RF Energy Exposure Booklet for PIU and Piccolo XR Plus Units, Motorola publication no. 6802974C70, which is distributed with the devices.

The radio frequency band used by the DIOS system has not been harmonized throughout the entire European Economic Area (EEA).

This page left intentionally blank.

INSTALLATION

General

SAFETY SUMMARY

Caution

The PIU and Piccolo XR Plus must be installed by qualified and authorized technicians, specifically qualified to handle high voltage if the installation involves high-voltage connections/installations.

Caution

If the PIU will be installed outdoors, an outdoor plastic enclosure complying with UL60950 standard clause 6 is required.

Note! **See Piccolo XR Plus Screw Mounting Options (page 20) for mounting details.**

Note! **This equipment is tested with specified length cables and in standard enclosure. If longer cables or a different enclosure are used, the installer is responsible to ensure that the installation complies with the requirements of the applicable standards.**

PIU Installation

PIU Dimensions

The unit dimensions are (see Figure 4):

- Width – 4.25" (108 mm),
- Height – 4.96" (126 mm),
- Height including antenna – 11.46" (291.1 mm),
- Depth – 1.67" (42 .6mm),
- Weight – 0.558 lb (253g) maximum.

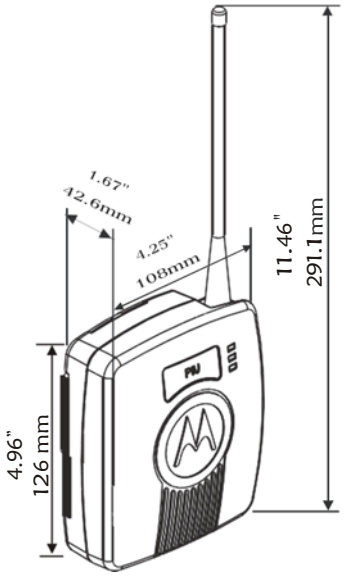

Figure 4
Dimensions of PIU Unit

The PIU is enclosed in a plastic housing, allowing 3 mounting options:

- Wall mount (Screws)
- Bracket mount
- DIN rail mount

Before installing the PIU, verify that there is sufficient space around the unit according to the specific installation.

Mounting the PIU On A Wall Using Screws

1. Secure two screws (not supplied) of maximum 0.37" (9.5 mm) head size to the wall, 3.256" (82.7 mm) apart. The wall-mounting template in Appendix D can be used to determine the space between both screws.
2. The screws must not protrude from the wall surface by more than 0.23” (6 mm) or by less than 0.16" (4 mm).
3. Attach the unit to the wall, fitting the two key hole shaped cavities on the back cover of the unit over the screws and sliding it down. (See Figure 5.)

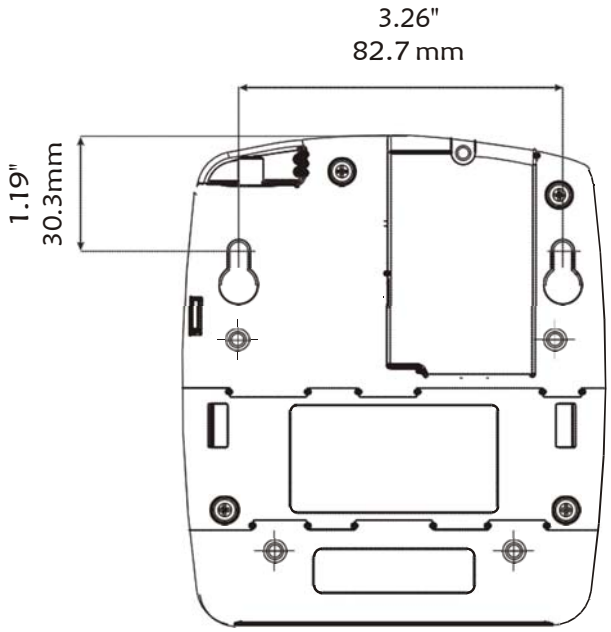

Figure 5
PIU Installation– Screw Mount dimensions

Mounting the PIU Using a Bracket

1. Using four M3x6 or M3x8 screws, attach a bracket (not supplied) to the back of the PIU. The upper two bracket holes must be 3.19" (81 mm) apart, and the lower two bracket holes must be 2.40" (61 mm) apart and 2.13" (54 mm) below the upper holes, as shown in Figure 6.
2. Attach the bracket to the mounting surface.

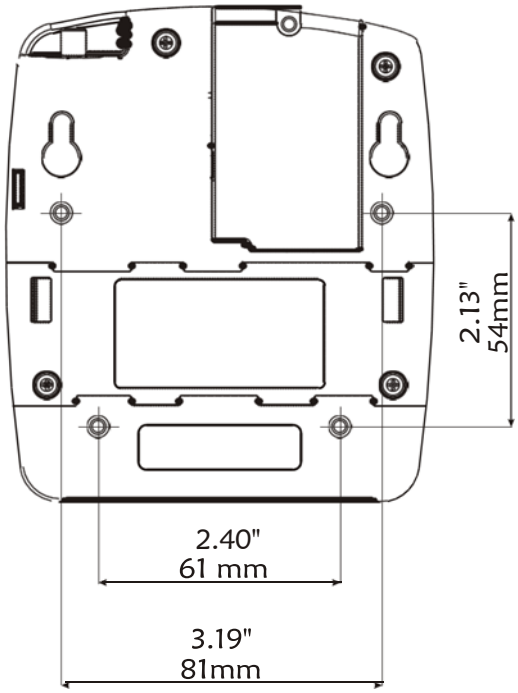

Figure 6
PIU Installation– Bracket Mount dimension

PIU DIN Rail Mounting

To mount the PIU on a DIN rail (not supplied), slide the PIU onto the rail at the grooves on the back of the unit. See Figure 7 and Figure 8.

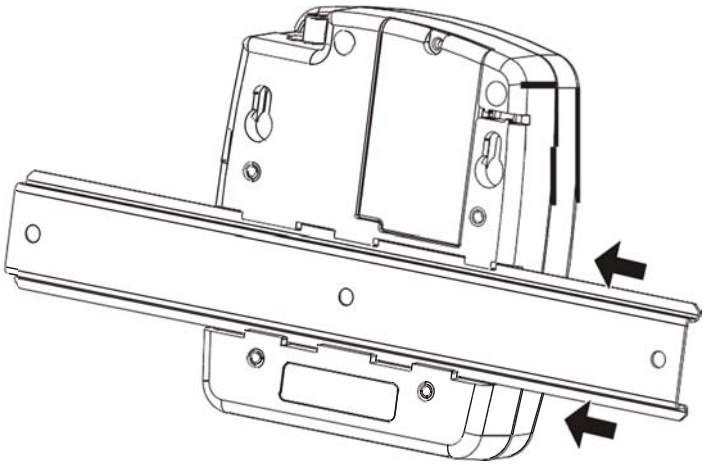

Figure 7
DIN Rail Attachment – Back View

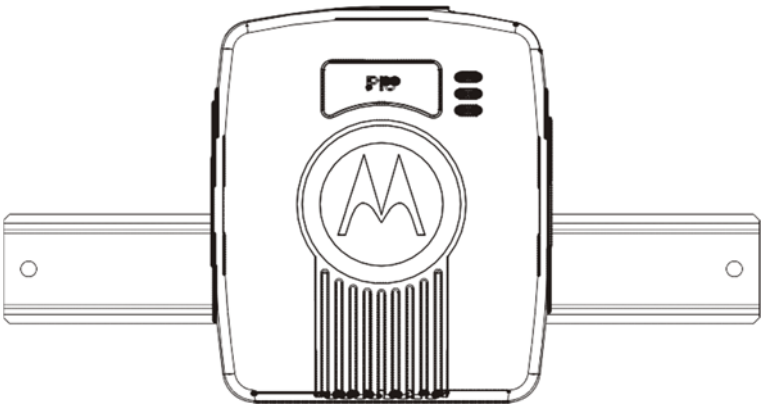

Figure 8
DIN Rail Attachment – Front View

PIU Electrical Connections

NOTE! Verify that all power connections are made in accordance with the applicable local standards.

PIU Ground Connections

Use the FKN8254B cable to connect the grounding cable directly to the TB connector of the PIU as shown in Figure 9.

NOTE! The grounding connector is also used as an ON/OFF switch, and the unit cannot be powered on without connecting it.

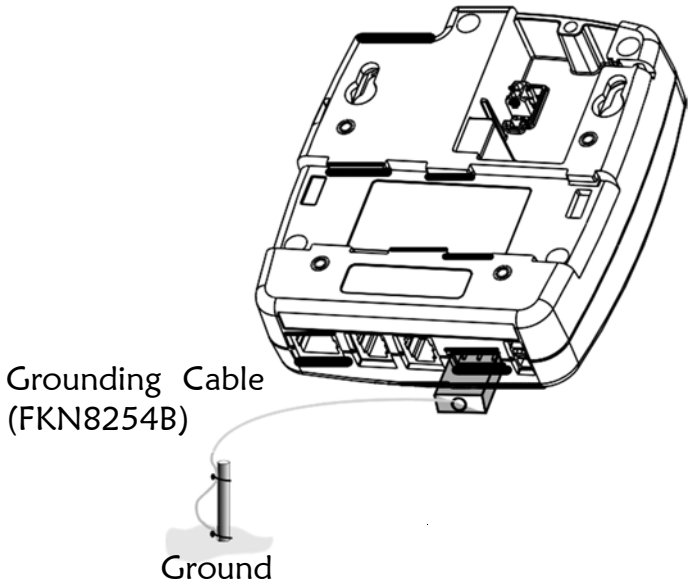

Figure 9
PIU Ground connection

Power Connection

The PIU can be powered by various types of supply sources:

- Internal (9VDC) battery;
- External 6V or 12V DC battery;
- Motorola power supplies – controllers. For example: IRRInet XL, IRRInet XM, IRRIcom, MOSCAD;
- 24VAC.

NOTE! The unit DC voltage range is 6 to 16 volts.

9VDC Internal Battery

Caution

Incorrect replacement of the battery can result in explosion! Replace only with the same or with an equivalent type of battery recommended by the manufacturer.

Dispose of used batteries according to the battery manufacturer instructions.

Place a standard 9VDC alkaline battery (not supplied) into the PIU battery chamber (see Figure 10). Battery operation is applicable when operating the unit in a non-radio mode, e.g. when the PIU is used as an adapter.

Installation of an Internal Battery

1. Release the screw at the top of the battery chamber door, and slide the door out, as shown in Figure 10.
2. Connect the 9V battery cable (FKN8204B) to the DC power input connector on the back of the unit.
3. Connect the 9V DC battery to the cable.
4. Place the 9V DC alkaline battery in the chamber as shown in Figure 10.
5. Close the battery chamber door and secure with the screw.

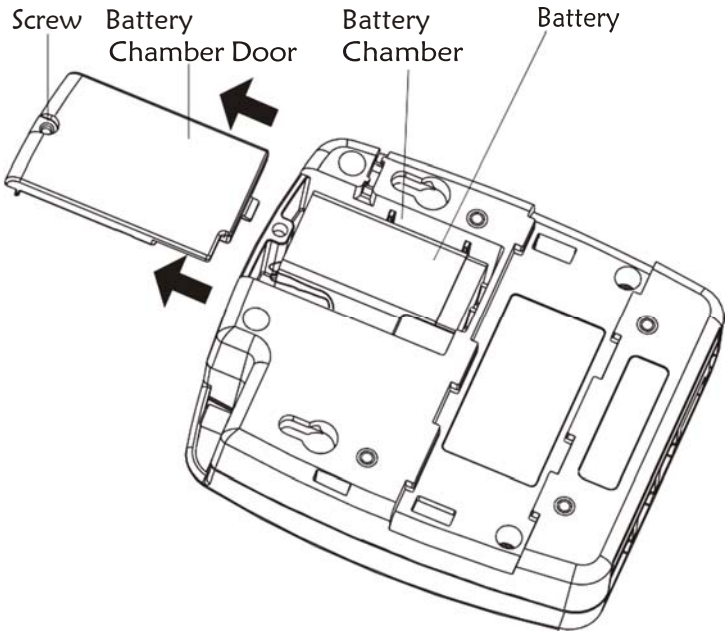

Figure 10
PIU Battery Chamber

External Battery Power Connections

Caution

The unit must be powered by a limited power source (12V DC) in accordance with standard UL/IEC 60950-1. See Power in Appendix A below.

This connection is used for normal operation of the PIU, when radio communication is required, or when RS485 or RS232 ports are used.

1. Release the screw at the top of the battery chamber door and slide the door out, as shown in Figure 10.
2. Connect the DC Adapter board (FCN6538B) to the DC power input connector on the back of the unit (Figure 11).
3. Connect the FKN8250B 7 ft cable to the DC Adapter board.
4. Connect the other cable end to an external 12VDC battery through 1A fuse (not supplied).
5. Close the battery chamber door and secure with the screw.

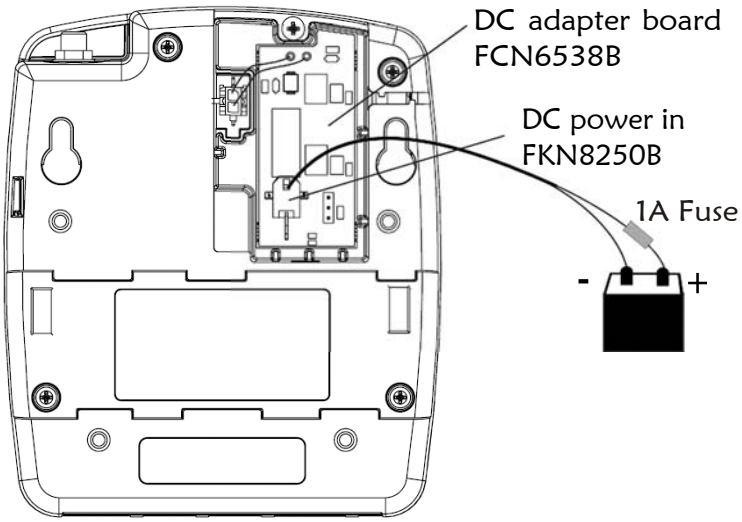

Figure 11
PIU Unit – Rear View with DC Adapter

External Power Supply Connections

Use the applicable cable from the V152AH PIU installation kit to connect the PIU to Motorola standard controller power supply.

1. Release the screw at the top of the battery chamber door and slide the door out, as shown in Figure 10.
2. Connect one end of the cable to the DC power input connector on the back of the unit.
3. Connect the other end of the cable to the power supply output of a Motorola controller.
4. Close the battery chamber door and secure with the screw.

24VAC Power Connections

Caution

The PIU must be connected to a power source equivalent to one or more of the following:

a. A listed Direct plug-in unit.
b. A Class II power source (defined by the National Electrical Code (NEC) and the Canadian Electrical Code (CEC).
c. A power source that complies with UL1950 C1.2.1 or UL60950 C1.2.5.

Caution

The unit must be powered by a limited power source (24V AC) in accordance with the UL/IEC 60950-1 standard. See Power in Appendix A below.

1. Connect the FKN8264B cable to the 24 V AC PWR IN connector as shown in Figure 12.
2. Connect the other end of the cable to the 24 V AC connection of a 110 V AC/220 V AC transformer (not supplied) through a 1 A fuse (not supplied).

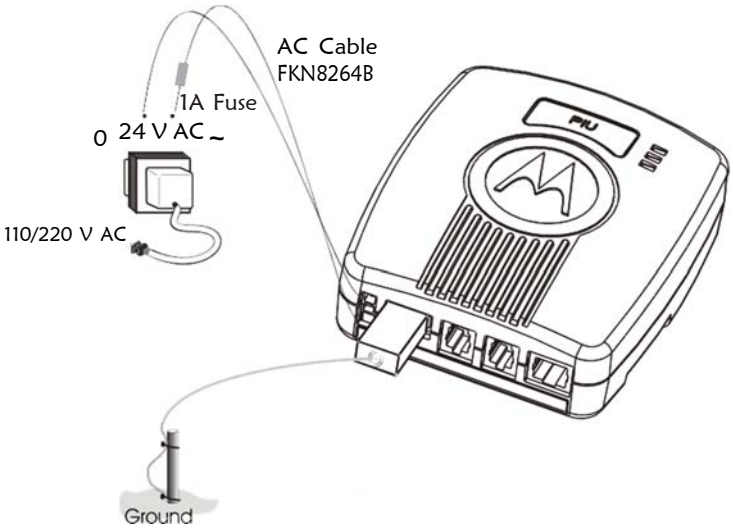

Figure 12
24VAC Power In Connection

PIU Antenna Connection

Flexible Antenna: Attach the flexible monopole antenna to the antenna connector at the top of the unit. See Appendix C for detailed information.

Pole Antenna: Attach the FKN8258B antenna cable to the antenna connector at the top of the unit. Connect the other end of the antenna cable to a customer-supplied pole antenna. See Appendix C for detailed information.

Piccolo XR Plus Installation

Piccolo XR Plus Dimensions

The unit dimensions are (see Figure 13):

- Width – 4.6" (117 mm)
- Height – 5.00" (127 mm)
- Hight including antenna – 11.46" (291.1 mm)
- Depth –2.67" (67.8mm)
- Weight – 0.54 lb (240 gr) maximum.

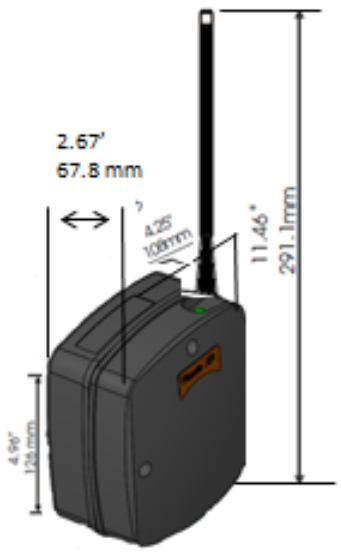

Figure 13
Dimensions of the Piccolo XR Plus Unit

The Piccolo XR Plus unit can be attached to any vertical or horizontal surface using screws. Before mounting the Piccolo XR Plus, verify that sufficient clearance is left around the unit. Allow 8" (20 cm) clearance off the bottom of the Piccolo XR Plus case for the user cable and 6.3" (16 cm) off the top of the unit for the flexible antenna.

Piccolo XR Plus Screw Mounting Options

Mount the Piccolo XR Plus on a vertical surface as follows:

Secure the unit to any vertical surface using one 0.35" (9 mm) maximum head screw. Use the mounting hole marked A in Figure 14 to attach it to the mounting surface. See Figure 15 B.

Mount the Piccolo XR Plus on a horizontal surface as follows:

Secure the unit to any horizontal surface using two 0.35" (9 mm) maximum head screws. Use the mounting holes marked B and C in Figure 14 to attach it to the mounting surface. See Figure 15 A.

Mount the Piccolo XR Plus on a wide plane as follows:

Secure the unit to any plane using three 0.35" (9 mm) maximum head screws. Use all three mounting hole marked A, B and C in Figure 14 to attach it to the mounting surface. See Figure 15 C.

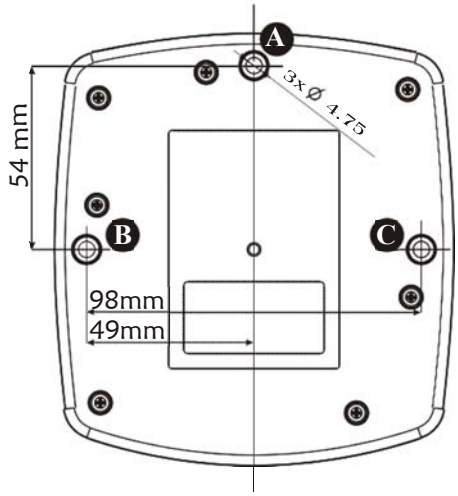

Figure 14
Piccolo XR Plus Mounting Screw holes – Back View

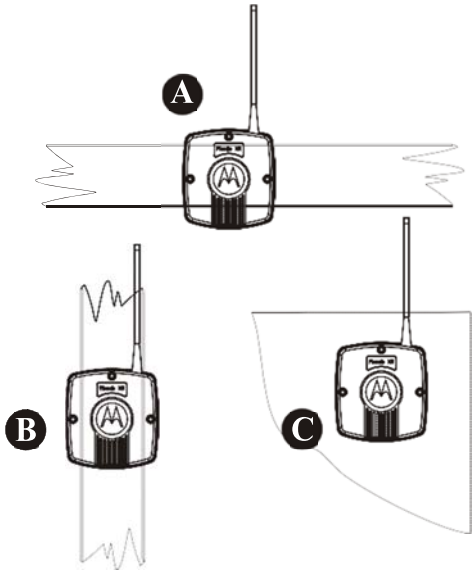

Figure 15
Piccolo XR Plus Mounting Options

Piccolo XR Plus Electrical Connections

NOTE! Verify that all power connections are made in accordance with the applicable local standards.

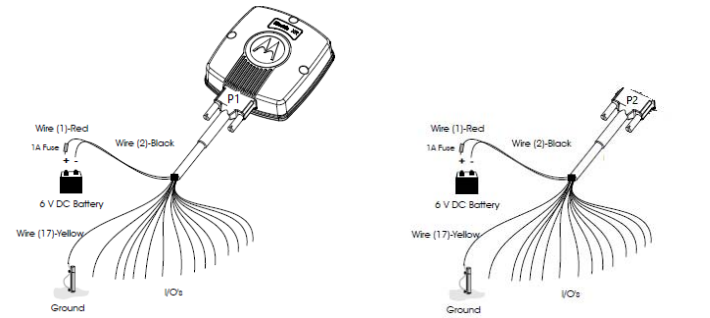

User Cable- 11.0558 P1 User Cable- 11.0559 P2

Figure 16
Piccolo XR Plus Ground and DC Power Connections

Piccolo XR Plus Ground Connections

Connect the yellow wire (17) of the 11.0558 user cable to the PGND, as shown in Figure 16.

Power Connections

Caution

The unit must be powered by a limited power source (6V DC) in accordance with standard UL/IEC 60950-1. See Power in Appendix A below.

The Piccolo XR Plus is powered by an external 6V DC battery source.

Use the 11.0558 and 11.0559 cables to connect the Piccolo XR Plus to an external battery. Connect Wire #1 (red) to the positive (+) pole of the battery through a 1A fuse (not supplied) and wire #2 (black) to the battery negative (–) pole. See Figure 16.

I/O Connections

The Piccolo XR Plus RTU can control up to eight DC Latch Solenoids.

The solenoid operating voltage can vary in the range of +9 to +20V DC (defined by the site configuration definition in the DIOS Service Toolkit).

The Piccolo XR Plus also responds to back indication signals from a maximum of twelve different field input sensors.

The available I/O module options are as follows:

- 5 DI / 5 DO
- 6 DI / 6 DO
- 8 DI / 8 DO
- 11 DI / 5 DO
- 12 DI / 4 DO

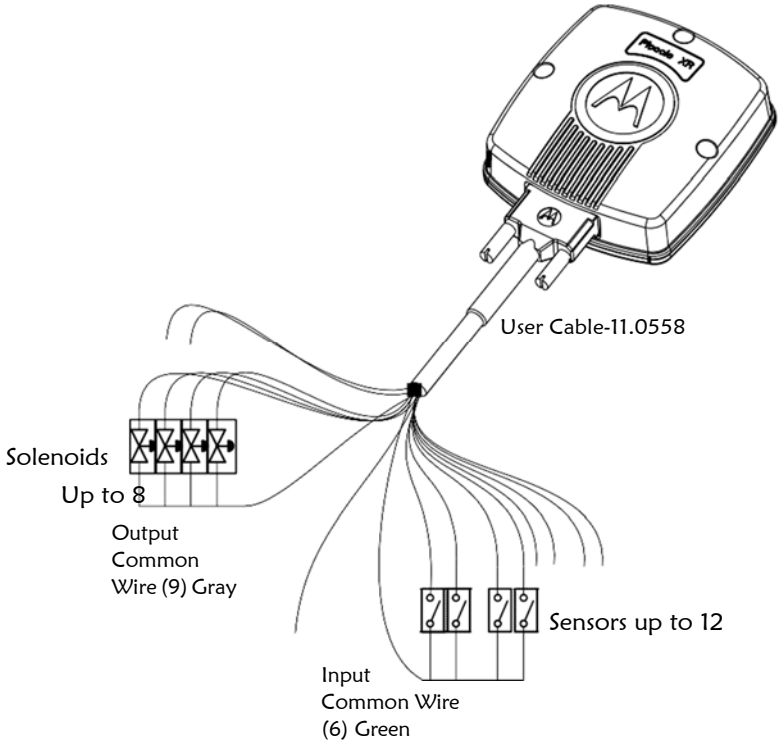

Figure 17
Piccolo XR Plus I/O Connections

NOTE! For proper operation, the Piccolo XR Plus unit must be connected either to a flexible antenna or to a pole antenna. See Appendix C for antenna installation details.

Table 1: **Connector P1 – Primary** Pin assignment of the Piccolo XR Plus user cable (11.0558) Connector

TAG	COLOR	DESCRIPTION
+	Red	Battery 6V (+)
-	Black	Battery 6V (–)
2	Green	Output 2
9	White / Black	Input 4
10	White / Gray	Input Common (1-4)
3	Brown	Output 3
4	Purple	Output 4
5	Gray	Output Common (1-4)
1	Blue	Output 1
6	White / Blue	Input 1
7	White / Green	Input 2
8	White / Purple	Input 3
31	Orange	Comm. 1 (to 31 P2)
32	White	Comm. 2 (to 33 P2)
33	White / Brown	Comm. 3 (to 32 P2)
GND	Yellow	GND

[*] Note! The Input Common, Output Common and Ground are INDEPENDENT.

Table 1: **Connector P2 – Secondary** Pin assignment of the Piccolo XR Plus user cable (11.0559) Connector

TAG	COLOR	DESCRIPTION
+	Red	Battery 6V (+)
-	Black	Battery 6V (–)
12	Green	Output 6
19	White / Black	Input 8
21	White / Yellow	Input 10
24	Black / Brown	Input Common (5-12)
13	Brown	Output 7
14	Purple	Output 8
15	Gray	Output Common (5-8)
11	Blue	Output 5
16	White / Blue	Input 5
17	White / Green	Input 6
18	White/ Purple	Input 7
20	White / Red	Input 9
22	White / Orange	Input 11
23	White / Gray	Input 12
31	Orange	Comm. 1 (to 31 P1)
32	White	Comm. 2 (to 33 P1)
33	White / Brown	Comm. 3 (to 32 P1)
GND	Yellow	GND

Note! The Input Common, Output Common and Ground are INDEPENDENT

THE DIOS PIU AND PICCOLO XR Plus UNITS

PIU Overview

The PIU unit (see Figure 18) is comprised of the following:

- Internal radio interfaces and a radio modem
- A logic board
- Communication ports

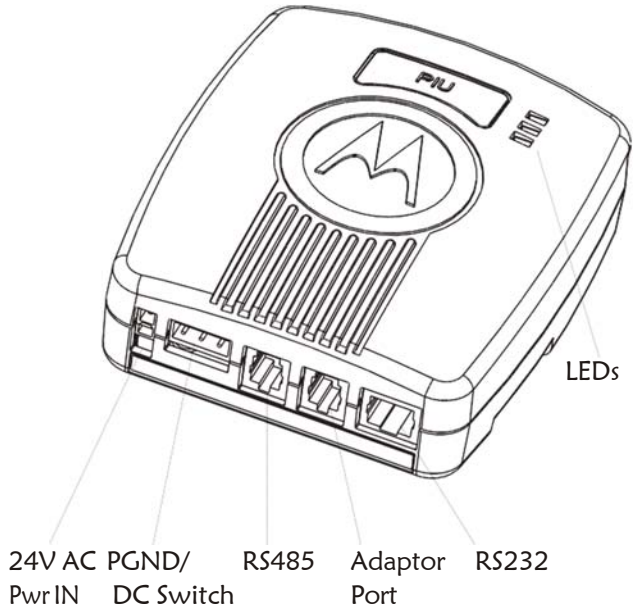

Figure 18
PIU Unit General View

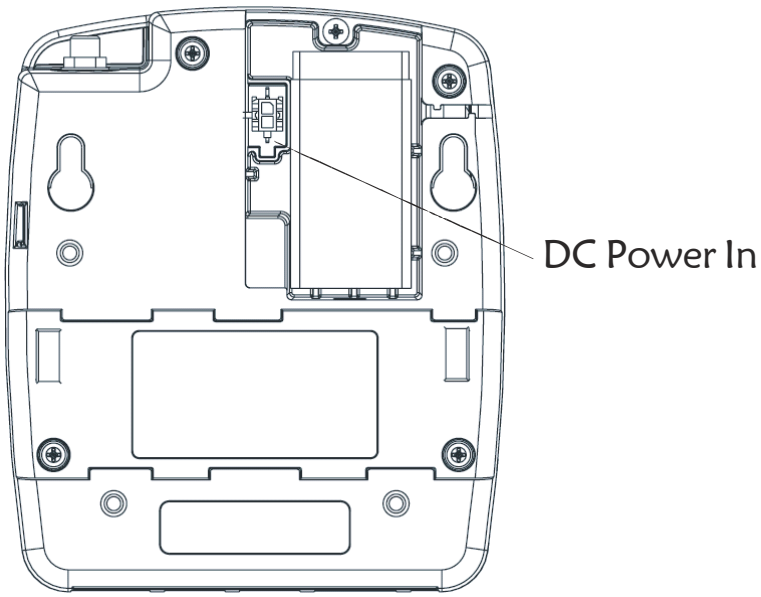

Figure 19
PIU Unit DC Power Connection– Rear View

PIU Communication Ports

The PIU has four ports:

NOTE! Only one of the two RS ports (232 and 485) can be operated at a time, i.e. they do not operate together.

- RS485: Communication between multiple PIU units and the FU.
- RS232: Communication between the PIU and the FU; Configuration Port (unit programming and monitoring).
- Adapter port: Communication with and programming the Piccolo XR Plus units.
- Internal Radio interface: internal DPSK modem.

PIU Connectors

The PIU connectors (see Figure 18):

- RS232 (RJ45, 8 pin)
- RS485 (RJ10, 4 pin)
- Adapter port (RJ10, 4 pin)
- PGND And Power Switch (TB 3 pin)
- 24 V AC PWR IN (2 pin)
- 6, 9, 12 V DC Battery Input (2 pin)

PIU LED Operation

Three software programmable LED indicators are located on the PIU enclosure (see Figure 18). These indicators can be used for diagnostics purposes.

- Radio TX/RX (RED): ON – a valid frame is received by the internal DPSK modem or the PIU transmits a frame.
- RS232/RS485 RX/TX (ORANGE): ON – a valid frame is received or transmitted through the RS232/RS485 port (UART1).
- Adapter port TX/RX (GREEN): ON – a valid frame is received or transmitted through the adapter port (UART2), or the Radio is being programmed.

PIU Adapter Operation

The PIU can be used as an adapter to perform the following functions:

- Communicating with the Piccolo XR Plus for configuration, monitoring or hardware test.
- Downloading new software to a Piccolo XR Plus unit.
- Downloading new software to a PIU unit.

Communicating With a Piccolo XR Plus Unit

1. Connect the PIU adapter RS232 port to the computer with the FTN6597B cable (see Figure 20).
2. Connect the PIU adapter unit to an external 12VDC battery or to an internal 9V battery. (See page 12 for power options).
   IMPORTANT: Ensure that there is a 20 cm safety distance between the PIU adapter unit and the user's body when connecting the battery.
3. Use the Distributed I/O Service Toolkit to turn off the radio's power.
4. Connect the Piccolo XR Plus unit to an external 6VDC power source. (See Power Connections on page 23.)
5. Use the P5 connector (communication) of the FKN8171B cable to connect the Piccolo XR Plus unit to the Adapter port of the PIU unit.
6. Use the Distributed I/O Service Toolkit to configure and monitor the Piccolo XR Plus or to test its hardware.

For additional information, please refer to the online help of the DIOS Service Toolkit.

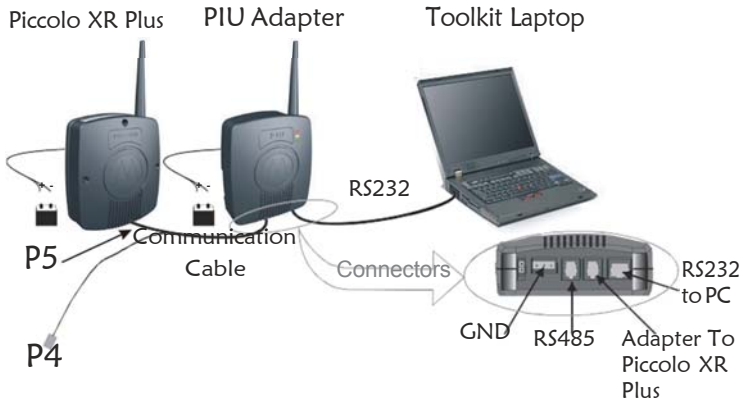

Figure 20
PIU Adapter – Piccolo XR Plus Communication Mode Connections

NOTE! The grounding connector is also used as an ON/OFF switch, and the unit cannot be powered on without connecting it. (See Figure 9.)

Downloading new software to a Piccolo XR Plus unit

1. Connect the PIU adapter RS232 port to the computer using the FTN6597B cable (see Figure 21).
2. Connect the PIU adapter unit to an external 12VDC battery or to an internal 9V battery. (See page 12 for power options).
3. Connect the Piccolo XR Plus unit to an external 6 V DC power source. (See Power Connections on page 23.)
4. Use the P4 connector (programming) of the FKN8171B cable to connect the Piccolo XR Plus unit to the Adapter port of the PIU unit.
5. Use the Distributed I/O Service Toolkit Downloader.

For additional information, please refer to the online help of the DIOS Service Toolkit.

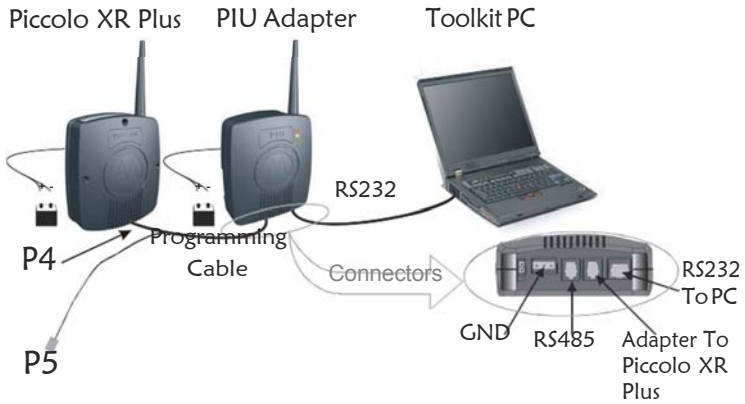

Figure 21
PIU Adapter – Piccolo XR Plus Downloading Mode Connections

NOTE! The grounding connector is also used as an ON/OFF switch, and the unit cannot be powered on without connecting it. (See Figure 9.)

Communicating with a PIU unit

1. Connect the PIU unit RS232 port to the computer with the FTN6597B cable (see Figure 22).
2. Connect the PIU unit to an external 12VDC battery or to an internal 9V battery. (See page 12 for power options.)
3. Use the Distributed I/O Service Toolkit for configuration, monitoring or hardware test.

For additional information, please refer to the online help of the DIOS Service Toolkit.

Figure 22
PIU Adapter – PC Communication Connections

NOTE! The grounding connector is also used as an ON/OFF switch, and the unit cannot be powered on without connecting it. (See Figure 9.)

Downloading new software to a PIU

1. Connect the PIU adapter RS232 port to the computer with the FTN6597B cable (see Figure 23).
2. Connect the PIU adapter to an external 12VDC battery or to an internal 9V battery. (See page 12 for power options).
3. Connect the PIU unit to an external 12VDC battery or to an internal 9V battery. (See page 12 for power options.)
4. Use the FKN8203B cable to connect the Adapter port of the PIU adapter to the RS232 connector of the PIU unit to be programmed.
5. Use the Distributed I/O Service Toolkit Downloader.

For additional information, please refer to the online help of the DIOS Service Toolkit.

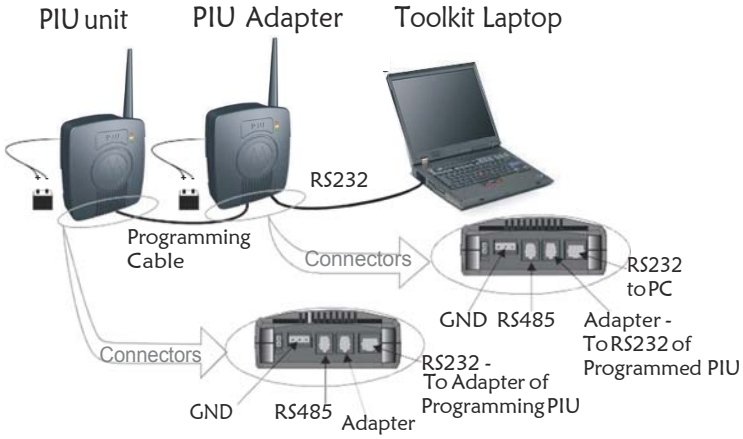

Figure 23
PIU Adapter Programming Mode Connections

NOTE! The grounding connector is also used as an ON/OFF switch, and the unit cannot be powered on without connecting it. (See Figure 9.)

Piccolo XR Plus Overview

The Piccolo XR Plus Remote Terminal Unit (RTU) is comprised of:

- Logic board, which includes:
  - I/O's
  - Radio interface
  - Power supplies
  - Communication ports
- Radio

2*26 PIN Connector
P1+P2

Figure 24
Piccolo XR Plus Unit

Piccolo XR Plus Communication Ports

The Piccolo XR Plus has three ports:

- Programming port: for downloading SW.
- UART Port: Configuration Port (for programming and monitoring the unit)
- Internal Radio interface: internal DPSK modem.

Piccolo XR Plus Connector

The Piccolo XR Plus has two D-type 26 pin connector (see Figure 24). See Table 1 and Table 2 on pages 25–26 for more information

Input/Output options

A variety of I/O options is available for use with the Piccolo XR Plus, increasing the system flexibility.

The available Piccolo XR Plus I/O options are:

- 5 DI / 5 DO
- 6 DI / 6 DO
- 8 DI / 8 DO
- 11 DI / 5 DO
- 12 DI / 4 DO

For option numbers, see Appendix B below.

APPENDIX A: PIU and PICCOLO XR Plus SPECIFICATIONS

PIU Specifications

Environmental

Operating Temperature	-30 °C to +60 °C (-22 °F to +140 °F)
Storage Temperature	-40 °C to +85 °C (-40 °F to + 185 °F)
Relative Operating Humidity	0 to 95% without condensation @ +50 °C (122 °F)
Operating Altitude	-400 m to +4000 m (-1300 ft to 13,000 ft) above sea level

Mechanical

Dimensions	126x108x42.6 mm ± 1 mm (4.96"x4.25"x1.67")	
Weight	253 gr ± 25 gr (0.56 lb ± 0.06 lb)	
User Connection	RS232	(RJ45)
	Adapter port	(RJ10)
	RS485	(RJ10)
	PGND and DC switch	(TB 3 PIN)
	24 VAC	(Molex header 2 PIN)
	6V, 9V, 12V DC BAT IN	(Straight 2 PIN)

PIU Board

Communication Ports	
RS232	Serial RS-232
RS485	Multi Drop 2 Wire
Adapter	Serial interface between PIU as adapter and PICCOLO–XR Plus (UART levels)
Boot-Strap	Software programming port
Internal Radio	
RF Frequency	UHF 450–470 MHz (actually 450.0125-469.9875) OR UHF 430-450 MHz (actually 430.0125-449.9875)* ** (Service Toolkit programmable)
Duty Cycle ratio	< 10% (relative to a 1 hour period for ISM band only)
Channel spacing	12.5 KHz
Internal Modem	DPSK 1200
TX RF Low power mode:	8 – 12 mW @+25 °C (+77 °F) (10 mW typical)
	5 – 16.3 mW @–30 °C - +60 °C (-22 °F to 140 °F)
TX RF High power mode:	80 – 108 mW @+25 °C (+77 °F) (100 mW typical)
	50 – 108 mW @–30 °C - +60 °C
Frequency Error:	± 1.5 ppm

* Includes unlicensed ISM (intended for industrial, scientific and medical purposes) band: Center frequency: 433.92 MHz, Frequency range: 433.05–434.79 MHz (actually 433.0625-434.7875 MHz) in Region 1. See Unlicensed Frequency Restrictions below.

** Not including 443.95 MHz and 444.8625 MHz.

TX deviation:	2KHz ± 15%
RX BER	BER<1% (See Note 5 on p. 41.)
LEDs	Red, Orange, Green (SW Programmable)

Power

Input Voltage

External Source (DC Power In)	6.00 to 16.00 VDC e.g. lead acid battery or solar panel, typically used in irrigation systems.
External Source (24V ~ IN)	24VAC±20%, typically from transformer to 110VAC or 220VAC.

Power Modes

Adapter Mode (Using the internal 9 V battery)

Normal Operation	1 – 5 mA	(See Note 4 on p. 41.)
Sleep Mode		
LPM0	250 – 400 µA	(See Note 1 on p. 41.)
LPM3	140 – 290 µA	(See Note 1 on p. 41.)
Power Fail Mode		
LPM3	270 – 850 µA	(See Note 3 on p. 41.)

PIU Mode (Using a 12 V or 6 V external power source)

Radio Transmission

(TX power-10 mW)	25 – 40 mA	(PWR IN =14 V)
	65 – 90 mA	(PWR IN = 6 V)
(TX power-100 mW)	30 – 65 mA	(PWR IN =14 V)
	85 – 135 mA	(PWR IN = 6 V)

Standby current

Radio Receives	13 – 18 mA	(PWR IN =14 V)
	30 – 38 mA	(PWR IN = 6 V)

Sleep Mode

LPM0	200 – 320 µA (See Note 2 on p. 41.)
LPM3	130 – 250 µA (See Note 2 on p. 41.)

Power Monitors

Power OK Voltage	(Service Toolkit Adjustable Default = 12 V DC) ± 200 mV
LOW Power Voltage	(Service Toolkit Adjustable Default = 11.2 V DC) ± 200 mV
Very Low Battery	(Service Toolkit Adjustable Default = 10.8 V DC) ± 200 mV

Reverse Input Voltage Connection	Protected

Note 1: Power In = 9 V DC (Adapter), RS232 = shutdown, RS485 = disable, Radio (On Board Circuits) = off, internal Radio is off. RS232 cable connected.

Note 2: Power Supply = 14 V DC (PIU), RS232 = shutdown, RS485 = disable, Radio (On Board Circuits) = off, internal Radio is off. RS232 cable connected.

Note 3: Power In = 5.4 V DC (Power fail), RS232 = shutdown, RS485 = disable, Radio (On Board Circuits) = off, internal Radio is off. RS232 cable connected.

Note 4: Power In = 9 V DC (Adapter), RS232 = auto shutdown, RS485 = disable, Radio (On Board Circuits) = off, internal Radio is off. RS232 cable connected.

Note 5: Apply 1.2 KHz FM signal with 2 KHz Deviation, Sensitivity @–110 dBm to the radio, and read BER. At extreme temperatures apply –104 dBm.

Piccolo XR Plus Specifications

Environmental

Operating Temperature	-30 °C to +60 °C (-22 °F to +140 °F)
Storage Temperature	-40 °C to +85 °C (-40 °F to + 185 °F)
Relative Operating Humidity	0 to 95% without condensation @ +50 °C (122 °F)
Operating Altitude	-400 m to +4000 m (-1300 ft to 13,000 ft) above sea level
Housing	IP66

Mechanical

Dimensions	127x117x67.8 mm ± 1 mm (5.00"x4.60"x2.67")
Weight	240 gr ± 24 gr (0.54 lb ± 0.05 lb)
User Connection	17 pin User Cable (26 pin D-type connector)
Wire Gauge	22 AWG

Piccolo XR Plus Board

INPUTS:

Number of Inputs	Modularity: 5,6,8,11,12
Dry contact Input Ratings	Open: > 45 kΩ (OFF) Closed: < 6 kΩ (ON)
Minimum pulse width	100 msec
Maximum pulse rate	7200 pulses per hour

OUTPUTS:

Number of Outputs	Modularity: 4,5,6,8
Output Drive Voltage	9 - 20 Volts (± 10%) (Service Toolkit Adjustable)- 2200 µF capacitor
Output Short Circuit Protection	>5 A

Communication Ports

UART 1 port	Serial port UART levels (Async.)
UART 2 port	Serial port UART levels (Async.)
Bootstrap Port	Software programming port

Internal Radio

RF Frequency	UHF 450–470 MHz (Service Toolkit programmable)
Duty Cycle ratio	< 10% (relative to a 1 hour period for ISM band only)
Channel spacing	12.5 KHz
Internal Modem	DPSK 1200
TX RF Low power mode:	8 – 12 mW @+25 °C (+77 °F) (10 mW typical)
	5 – 16.3 mW @–30 °C - +60 °C (-22 °F to 140 °F)
TX RF High power mode:	80 – 108 mW @+25 °C (+77 °F) (100 mW typical)
	50 – 108 mW @–30 °C - +60 °C
Frequency Error	± 1.5 ppm
TX deviation	2KHz ± 15%
RX BER	BER<1% (See Note 10 on p. 44.)

Power

Input Voltage

External Battery Source 4 to 7.8 V DC (See Note 11 p. 45.)

Power Consumption (6 V battery operation)

Normal Operating Mode:

Radio Transmission		
Radio Off	1.2 – 1.5 mA	(See Notes 6, 7 p. 44.)
(TX power-10mW)	65 – 90 mA	(See Notes 8, 9 p. 44.)
(TX power-100mW)	100 – 150 mA	(See Notes 8, 9 p. 44.)
Radio Receives	30 – 40 mA	(See Notes 8, 9 p. 44.)
Sleep Mode		
LPM0	190 – 250 µA	(See Note 7 p. 44.)
LPM3	40 – 65 µA	(See Note 7 p. 44.)
Power Fail Mode LPM3	40 – 70 µA	(See Note 6 p. 44.)

<u>Power Monitors</u>

Power In Report	± 200 mV
Power OK Voltage	Service Toolkit Adjustable Default = 6 V DC ± 200 mV
Low Power Voltage	Service Toolkit Adjustable Default = 5 V DC ± 200 mV
Very Low Battery	Service Toolkit Adjustable Default = 4.8 V DC ± 200 mV
Reverse Input Voltage Connection	Protected

Note 6: Power In = 4 V DC, Radio (On Board Circuits) = Off, internal Radio is off.

Note 7: Power In = 7.8 V DC, Radio (On Board Circuits) = Off, internal Radio is off.

Note 8: Power In = 5.5 V DC, Radio (On Board Circuits) = On, internal Radio is On.

Note 9: Power In = 7.8 V DC, Radio (On Board Circuits) = On, internal Radio is On.

Note 10: Apply 1.2 KHz FM signal with 2 KHz Deviation, Sensitivity @-110 dBm to the radio, and read BER. At extreme temperatures apply -104 dBm.

Note 11: For radio functionality external Power In minimum voltage=5 V.

Note 12: Please note that due to the lower transmission power, the distance between the Piccolo and the PIU is shorter than the distance when using a licensed frequency with 100 mW transmission power.

Note 13: The current consumption of the Piccolo will increase due to the fact that the Maximum transmission time is reduced and therefore the Piccolo should wake up more frequently.

Note 14: The maximum number of transmissions from the PIU/Piccolo is limited to 360 per hour. When this number is exceeded, the PIU/Piccolo will stop transmitting until the current hour has elapsed.

Note 15: The PIU/Piccolo will not transmit on a busy channel. Verify that the frequency you choose in the band is not continually busy.

Regulatory Standards

US and Canada Grant of Equipment Authorization

IMPORTANT: Unauthorized repairs or modifications could result in permanent damage to the equipment and void your warranty and your authority to operate this device under Part 15 of the FCC Rules.

FCC Grant of Equipment Authorization

FCC ID: 2APCUMO515A

This Class B digital apparatus complies with Canadian ICES-003.

Radio	Network	Freq Band	Rated Power
FM	UHF	450-470MHz	100mW

FCC INTERFERENCE

This device complies with Part 15 of the FCC Rules. Operation is subject to the following two conditions:

1) This device may not cause harmful interference.

2) This device must accept any interference received, including interference that may cause undesired operation.

For detailed product safety and RF exposure, refer to the Product Safety and RF Energy Exposure Booklet for PIU and

Piccolo XR Plus Units, Motorola publication no. 6802974C70, which is distributed with the devices.

European Union Notification

The CE mark is the official marking required by the European Community for all Electric and Electronic equipment that will be sold, or put into service for the first time, anywhere in the European community.

It proves to the buyer or user that this product fulfills all essential safety and environmental requirements as they are defined in the European Directives.

Mhz is marked with the CE mark.

Marked with the following CE marks, CE ⓘ, carries

Equipment Disposal

Waste (Disposal) of Electronic and Electric Equipment

Please do not dispose of Electronic and Electric Equipment or Electronic and Electric Accessories with your household waste. In some countries or regions, collection systems have been set up to handle waste of electrical and electronic equipment. In European Union countries, please contact your local equipment supplier representative or service center for information about the waste collection system in your country.

FCC Warnings

This device has been tested and found to comply with the limits for a Class B digital device, pursuant to Part 15 of the FCC Rules. These limits are designed to provide reasonable protection against harmful interference in residential installations. This equipment generates uses and can radiate radio frequency energy and, if not installed and used in accordance with the instructions, may cause harmful interference to radio and television reception. However, there is no guarantee that interference will not occur in a particular installation. If this device does cause such interference, which can be verified by turning the device off and on, the user is encouraged to eliminate the interference by one or more of the following measures:

– Re-orient or re-locate the receiving antenna.
– Increase the distance between the device and the receiver.
– Connect the device to an outlet on a circuit different from the one that supplies power to the receiver.
– Consult the dealer or an experienced radio/TV technician.

WARNING! Changes or modifications to this unit not expressly approved by the party responsible for compliance could void the user's authority to operate the equipment.

A distance of at least 20 cm between the equipment and all persons should be maintained during the operation of the equipment.

APPENDIX B: MODELS and ACCESSORIES

General

The following tables describe the available models, options and accessories.

DIOS Models	Model
Piccolo Interface Unit (PIU)	F4604B
Piccolo XR Plus DC	F4614B

PIU Options	Option
ADD: RS-485 Option (indoor)	V440AD
ADD: RS-232 Cable 3 m	V666AA
ADD: UHF Antenna for PIU	V208AJ
ADD: PIU Adapter	V345AM
ADD: PIU DIOS Application	V377AD
INT: 12.5 KHz UHF Radio, 450–470 MHz	V347CT/ FLE6036C

Piccolo-XR Plus Options	**Option**
ADD: 5 DI / 5 DO Option	XR Plus 5/5
ADD: 6 DI / 6 DO Option	XR Plus 6/6
ADD: 8 DI / 8DO Option	XR Plus 8/8
ADD: 11 DI / 5 DO Option	XR Plus 11/5
ADD: 12 DI / 4 DO	XR Plus 12/4
ADD: UHF Antenna for Piccolo–XR	V208AH
INT: 12.5 KHz UHF Radio, 450–470 MHz	V347CT/ FLE6036C

Accessories	**Kit number**
TEC Programming & Monitoring Cable (26 pin)	FKN8171B
Pole Antenna Kit (SMA TO SMA)	FAE5534B
Pole Antenna Kit (SMA TO N-TYPE)	FLN3373B
I/O Cable for Piccolo XR Plus – P1	11.0558
I/O Cable for Piccolo XR Plus – P2	11.0559

APPENDIX C: ANTENNA

General

The PIU and Piccolo XR Plus units can be connected either to a flexible or to a pole antenna.

The antenna connector (see Figure 25), located at the top of the unit, is used for both antenna types.

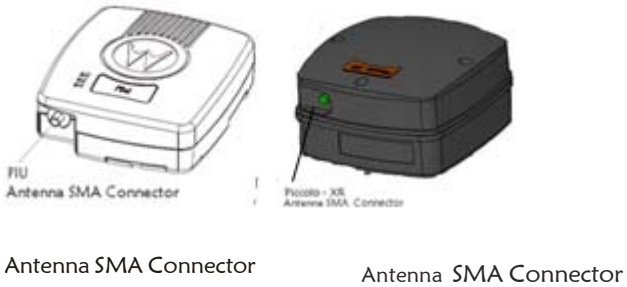

Figure 25
PIU and Piccolo XR Plus Antenna Connectors

Flexible Antenna Specifications

Frequency Range:	UHF
Polarization:	Vertical
Nominal Impedance:	50 ohms
VSWR:	1.5:1 max at resonance
Power Rating	50 watts
Temperature Range:	-40ºC to +85ºC

Pole Antenna

The pole antenna installation must comply with the following requirements in order to ensure optimal performance and guarantee that human exposure to radio frequency electromagnetic energy is within the guidelines set forth by the applicable local regulations.

The antenna must be mounted outdoors, preferably on a tower, if possible.

Building mounted antennas must be located on the building roof.

All fixed site antenna installations, including the installation of this pole antenna, require that, under the responsibility of the licensee, the installation site be managed in accordance with the applicable regulatory requirements. This may require taking additional compliance actions such as signage and site access restrictions in order to ensure that human exposure limits are not exceeded.

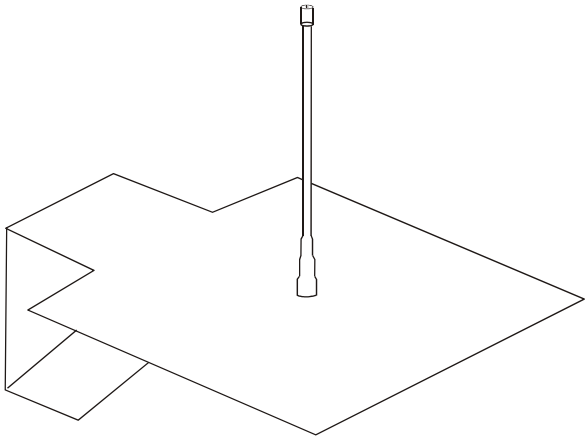

Figure 26
PIU/Piccolo XR Plus Pole Antenna

Pole Antenna installation

SMA to SMA option

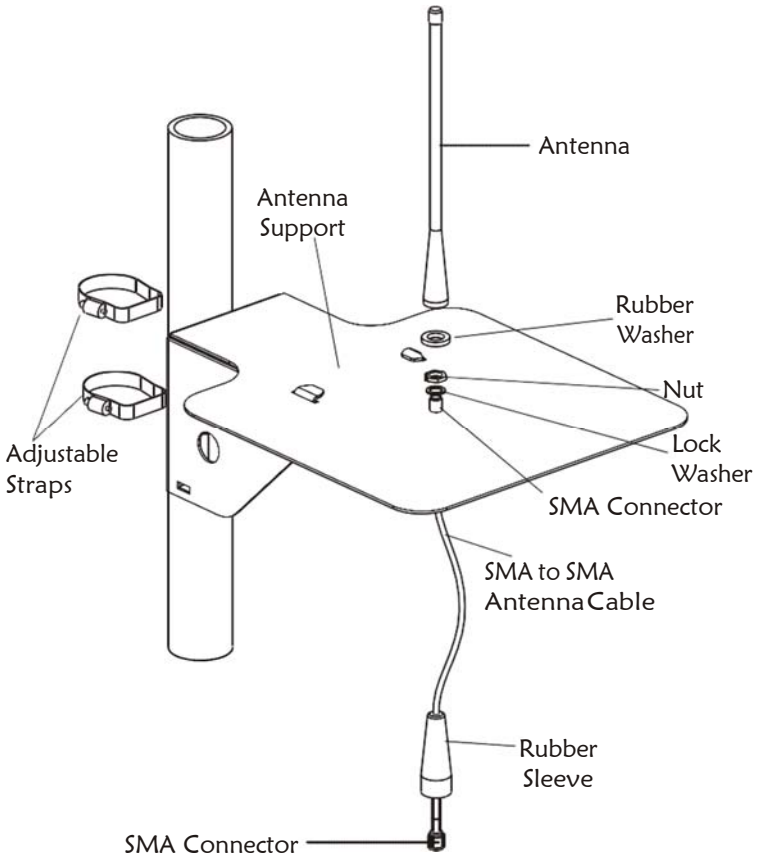

Figure 27
SMA to SMA type PIU/Piccolo XR Plus Pole Antenna

1. Connect a flexible antenna to the antenna support plate using rubber washers, lock washer and a nut (see Figure 27).
2. Connect one end of the SMA Cable to the antenna connection.
3. Connect the other end to the PIU/Piccolo XR Plus.

SMA TO N-TYPE

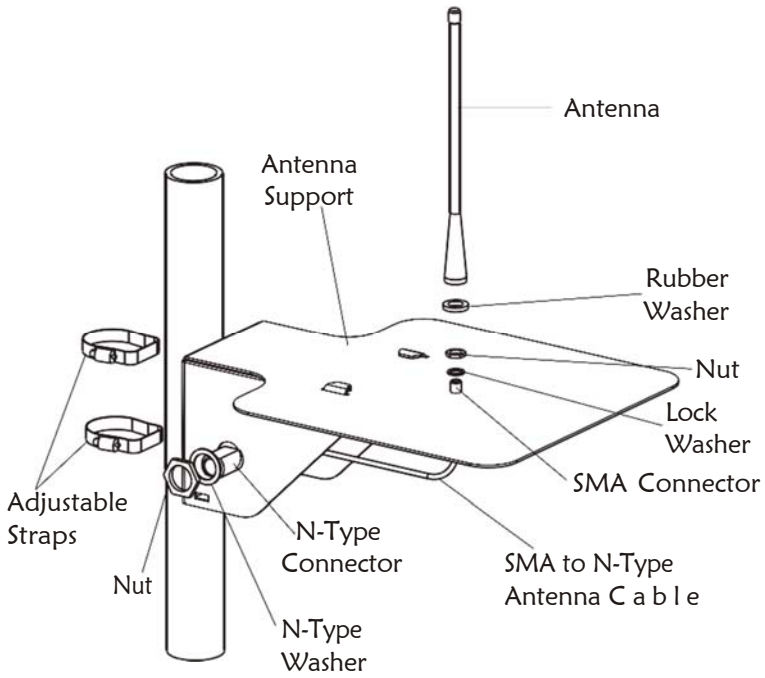

Figure 28
SMA to N-Type Pole Antenna

1. Connect a flexible antenna to the antenna support plate using rubber washers, lock washer and a nut (see Figure 28).
2. Connect the SMA end of the cable to the antenna connection.
3. Connect the N Type end to the PIU/Piccolo XR Plus.

Pole Antenna Dimension

Figure 29 shows recommended dimensions for a supporting plate for the pole antenna.

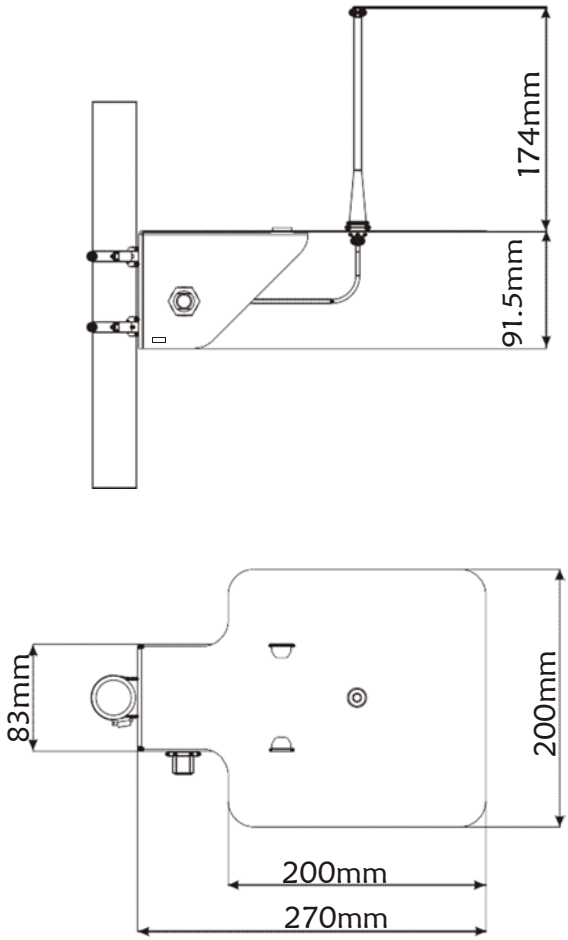

Figure 29
PIU/Piccolo XR Plus Pole Antenna Supporting Plate Dimensions

This page left intentionally blank.

APPENDIX D: PIU/Piccolo XR Plus MOUNTING TEMPLATES

Use the following template for PIU wall mounting.

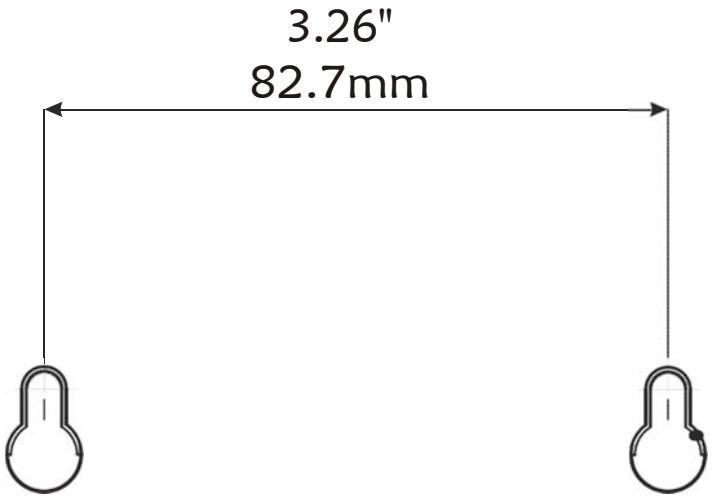

Figure 30
PIU Wall Mounting Template (Full Size)

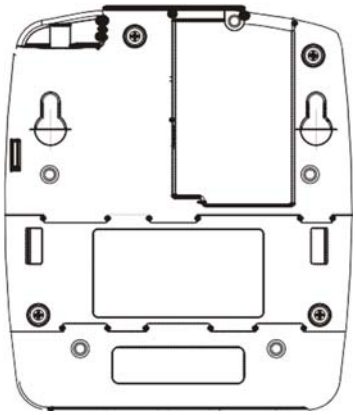

Figure 31
PIU Back

The following is a template that can be used for mounting the Piccolo XR Plus unit.

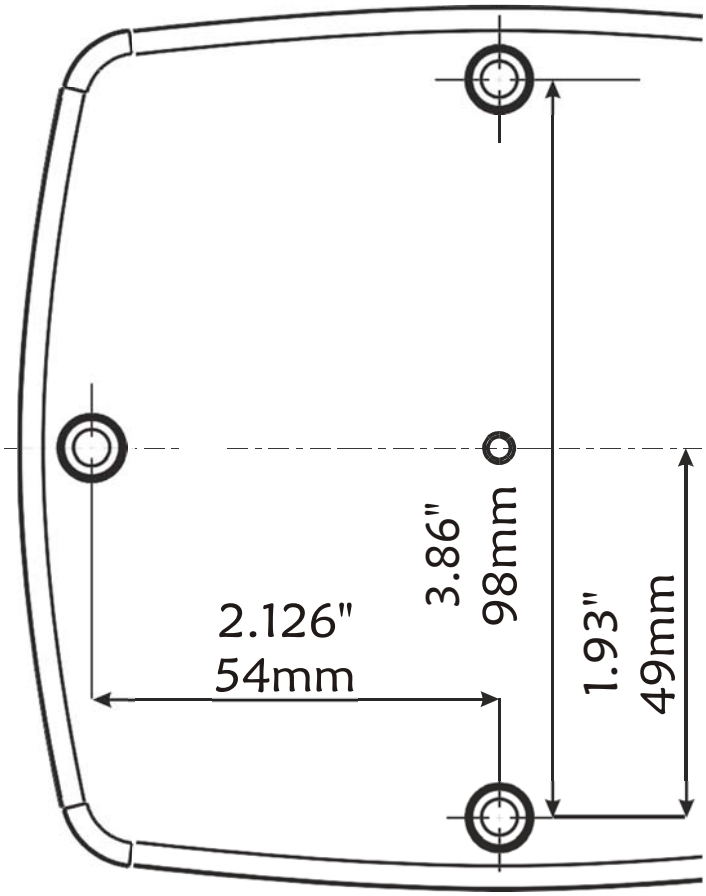

Figure 32
Piccolo XR Plus Mounting Template (Full Size)

MOTOROLA and the Stylized M Logo are registered in the U.S. Patent and Trademark Office. All other product or service names are the property of their respective owners.

Copyright © 2009 Motorola All Rights Reserved

6802974C40-R

@6802974C40@

August 2009