71.6 Watch Fast Charger Inductive Coil Module Dimensions

REV	ECO#	DESCRIPTION OF REVISION

NOTES: (UNLESS OTHERWISE SPECIFIED)

1. NO ELECTRICAL SHORTS BETWEEN GND PAD AND SURROUNDING METAL.
2. THE TOP SURFACE OF THE INDUCTIVE COIL ASSEMBLY (DATUM A) SHALL BE 0.40MM ±0.25MM PROUD OF THE SURROUNDING SURFACE.
3. COMPONENTS AND TERMINATIONS ON THE CONTROL MODULE SHALL BE FULLY ENCAPSULATED WITH A RIGID GLUE TO PROTECT COMPONENTS. LOCTITE UV9061F OR EQUIVALENT GLUE RECOMMENDED
4. THE CONTROL MODULE SHOULD BE CONTAINED WITHIN A SHEET METAL ENCLOSURE. THERMAL PASTE SHOULD BE USED TO THERMALLY BRIDGE THE CONTROL MODULE TO THE THERMALLY CONDUCTIVE ENCLOSURE. COLLTECH N-SIL 8516W THERMAL PASTE OR EQUIVALENT PASTE RECOMMENDED (THERMAL CONDUCTIVITY TARGET OF AT LEAST 1.5 W/mK).

Product name：Wireless charging coil module
Turns：9Ts (ref)
WIRE：0.08*24P
Winding Direction：Clockwise (based on the outermost circle)
Unit：mm

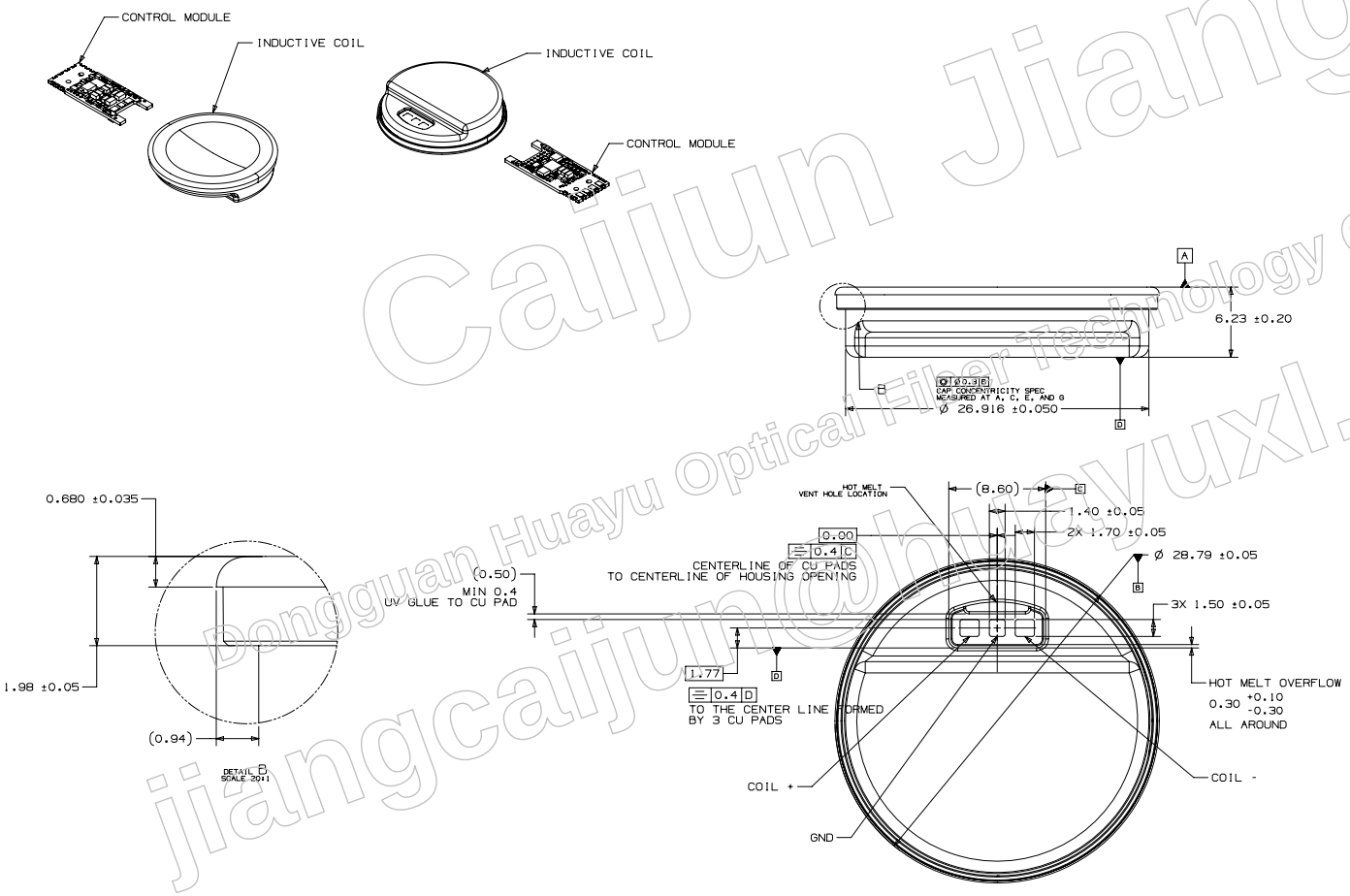

ADD：10600 N Tantau Ave, Cupertino, CA 95014

METRIC	Apple Inc.
DRAWTER: APPLE INC	DATE
DESIGNER: APPLE INC	DATE
DIMENSIONS ARE IN MILLIMETERS TOLERANCES	NOTICE OF PROPRIETARY PROPERTY: THE INFORMATION CONTAINED HEREIN IS THE PROPRIETARY PROPERTY OF APPLE INC. THE POSSESSOR AGREES TO THE FOLLOWING: (i) TO MAINTAIN THIS DOCUMENT IN CONFIDENCE (ii) NOT TO REPRODUCE OR COPY IT (iii) NOT TO MAKE USE OR PUBLISH IT IN WHOLE OR PART (iv) ALL RIGHTS RESERVED
	TITLE: APPLE WATCH FAST CHARGER MODULE
DO NOT SCALE DRAWINGS	DRAWING NUMBER / REV. 01
THIRD ANGLE PROJECTION	SIZE D / SCALE NONE / SHT 1 OF 2

NX GENERATED

Caijun Jiang
Dongguan Huayu Optical Fiber Technology Co., Ltd.
jiangcaijun@huayuxl.com