# Zermat
# USA Speaker

zermat®
INTERNATIONAL

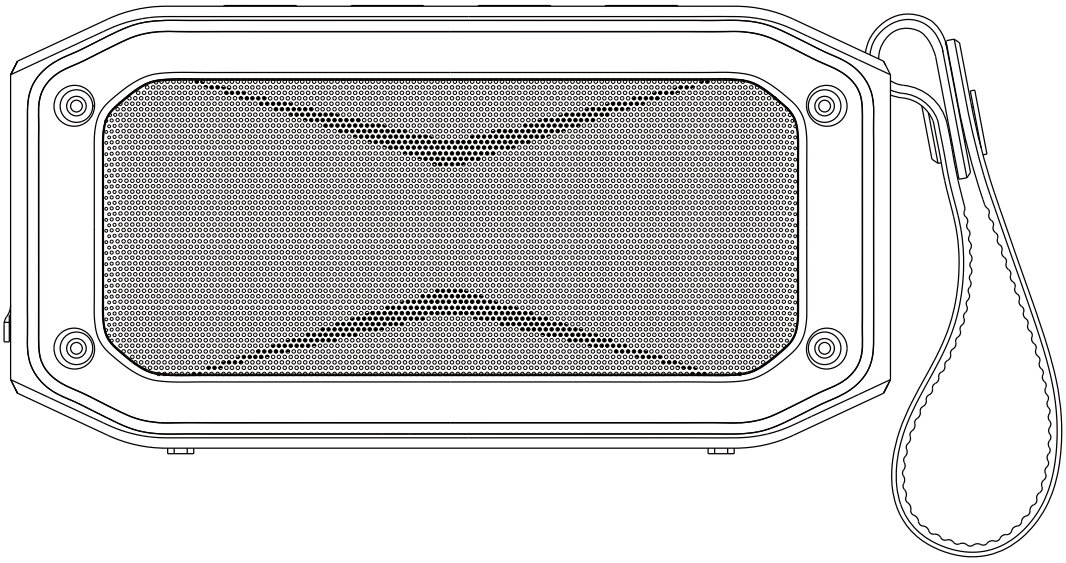

EN Operating Instructions

Thanks for purchasing Zermat USA Speaker. This manual will give you better use of our Bluetooth speakers.Please carefully understand the Bluetooth function of your playback device before using our Bluetooth speakers.

## Product Overview:

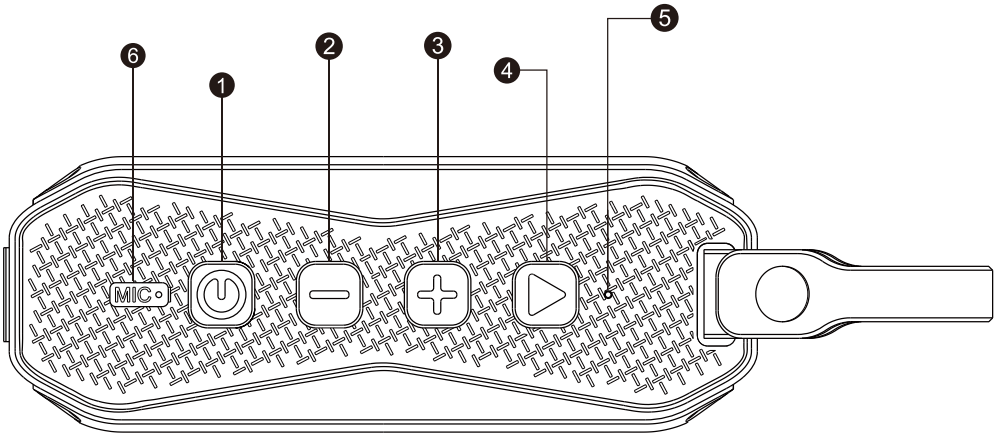


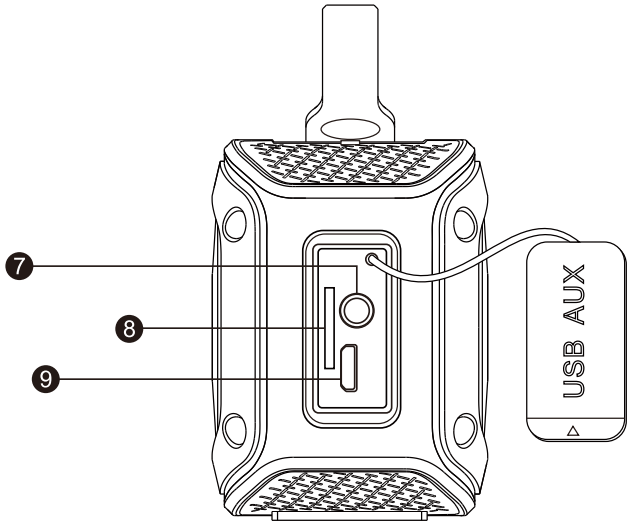

❶ Power button: ON/OFF; Mode switch
❷ Vol-/ Previous track: short press for previous track, long press for Volume down
❸ Vol+/ Next track: short press for next track, long press for Volume up
❹ Play/Pause/Answer (when call in)
❺ Indicator light
❻ Mic
❼ Line in: 3.5mm line in jack
❽ TF card slot (Optional)
❾ Micro USB charging port

**How to use this speaker:**

**Connecting the Bluetooth device:**

1. Enter Bluetooth status automatically after long press the “Power” button, the blue indicator light blinks quickly.
2. Turn on the Bluetooth function of your mobile phone or other Bluetooth devices, search for “Zermat USA Speaker” on your device’s Bluetooth list and then pair it (please input “1234” or “0000” if the device requires you to input a paring code), the indicator light blinks slowly after pairing successfully.

3.You can short press the Play/Pause button to play or pause the music. Long press “+” for volume up or “-” for volume down. Short press “+” or “-” for next or previous track.

4.Long press “Play/Pause” button to disconnect the speaker from the current device and reset it into pairing mode.

## Hands free function

This speaker has a built-in Microphone, you may use it to answer the phone call as a hands-free device.

1.When the speaker is playing music via Bluetooth of your cell phone, the music will pause and you will hear the ringtone in case of any incoming call, you can short press the “Play/Pause” button to answer the call via built-in MIC. Short press the “Play/Pause” button again if you want to hang up the call after conversation.

2.You may long press the “Play/pause” button to decline an incoming call if you don’t want to answer the call.

## Line-in mode:

If you want play music from mp3 player or the other device which doesn’t have Bluetooth function, you could use the attached audio cable to connect the speaker with the device.

1.Turn on the speaker, insert the 3.5mm plug into the line in jack of the speaker, and insert another 3.5mm plug into the device.

2.The speaker will change to “Line in” mode automatically and the indicator light turns red and lights steadily.
3.You may long press “+” for volume up or “-” for volume down. The other buttons on the speaker does not work at Line in mode.
4.You may short press “Power” button to back to Bluetooth mode at anytime.

## Mp3 mode(Optional):

1.Turn on the speaker, Insert a TF card with music files (mp3) into the TF card slot of the speaker.
2.The speaker will change to “Mp3” mode automatically and the indicator light turns red and lights slowly.
3.You may control it by using Play/Pause, Volume +/- buttons.
4.You may short press “Power” button to back to Bluetooth mode at anytime.

## True Wireless Stereo Technology:

If you have two of this Bluetooth Speakers you can use them together as 2.0 stereo speakers.  Be sure neither speaker is paired to a device before you connect them together. Press and hold the “Play/Pause” button to disconnect the speaker from the current device and reset it into pairing mode. Please make sure the 2 speakers are not placed more than 10 meters / 33 feet from each other when paring.

1.Press the “Power” button to turn on speaker number 1.
2.Press and hold the “Play” button quickly to enter the Stereo Pairing mode.
3.The blue indicator light will blink slowly.
4.To pair the speakers together, next you need to press the “Power” button to turn on speaker number 2.
5.Speaker 2 will automatically search for the other speaker and connect with it.
6.When the speakers are connected the blue indicator light on the 2nd speaker will blink steadily.
7.To connect your device to the two speakers, you will need to turn on the Bluetooth function of your device.
8.Search for “Zermat USA Speaker” on the wireless list and then pair with it.If you need to input a pairing code, use 1234 or 0000.
9.The indicator light of the number 1 speaker will blink slowly after the pairing is successful.
10.To turn off the True Wireless Stereo mode, press and hold the “Play” button.

**Charging:**

Connect the USB cable to an USB power adapter or an USB port of the computer, and then plug the micro USB into the micro USB port of the speaker. While charging, the indicator light is always in green. When it is full charged, the indicator light turns off. Normally it takes around 3-4 hours to fully charged your speaker. It depends on the power supply of your USB power adapter.

## ECO mode:

If there is no connection within 5 minutes after power on, the speaker will automatically power off.
If there is no any music(sound) playing within 5 minutes after the connection, the speaker will automatically power off.

## Troubleshooting:

Q: Why I can find the speaker in the Bluetooth list of my playback device but could not connect with it successfully?
A: Please long press “Play/Pause” button to reset the Bluetooth connection and try to connect it again.
Q: Why it always playing music from TF card when I turn the speaker on?
A: Please remove the TF card from the speaker or you can short press the “Power” button to change the speaker to “Bluetooth” mode.

Made in China
Zermat USA Inc.

NOTE: This equipment has been tested and found to comply with the limits for a Class B digital device, pursuant to part 15 of the FCC Rules. These limits are designed to provide reasonable protection against harmful interference in a residential installation. This equipment generates uses and can radiate radio frequency energy and, if not installed and used in accordance with the instructions, may cause harmful interference to radio communications. However, there is no guarantee that interference will not occur in a particular installation. If this equipment does cause harmful interference to radio or television reception, which can be determined by turning the equipment off and on, the user is encouraged to try to correct the interference by one or more of the following measures:

- Reorient or relocate the receiving antenna.

- Increase the separation between the equipment and receiver.

-Connect the equipment into an outlet on a circuit different from that to which the receiver is connected.

-Consult the dealer or an experienced radio/TV technician for help

Changes or modifications not expressly approved by the party responsible for compliance could void the user's authority to operate the equipment. This device complies with Part 15 of the FCC Rules. Operation is subject to the following two conditions:

(1) this device may not cause harmful interference, and

(2) this device must accept any interference received, including interference that may cause undesired operation.