SLM310 Hardware Design Manual

Controlled version: V 1.01

Release date :November 2023

IMPORTANT NOTICE

COPYRIGHT NOTICE

Copyright © MeiG Smart Technology Co., Ltd. All rights reserved.

All contents of this manual are exclusively owned by MeiG Smart Technology Co., Ltd (MeiG Smart for short), which is under the protection of Chineselawsandcopyrightlaws in international conventions. Anyone shall not copy, spread, distribute, modify or use in other ways with its contents without the written authorization of MeiG Smart. Those who violated will be investigated by corresponding legal liability in accordance with the law.

NO GUARANTEE

MeiG Smart makes no representation or warranty, either express or implied, for any content in this document, and will not be liable for any specific merchantability and applicable or any indirect,particular and collateral damage.

CONFIDENTIALITY

All information contained here (including any attachments) is confidential. The recipient acknowledges the confidentiality of this document, and except for the specific purpose, this document shall not be disclosed to any third party.

DISCLAIMER

MeiG Smart will not take any responsibility for any property and health damage caused by the abnormal operation of customers. Please develop the product according to the technical specification and designing reference guide which defined in the product manual. MeiG Smart have the right to modify the document according to technical requirement with no announcement to the customer.

The device could be used with a separation distance of 20cm to the human body.

Hereby, [MeiG Smart Technology Co., Ltd] declares that the radio equipment type [SLM310] is in compliance with Directive 2014/53/EU.

The full text of the EU declaration of conformity is available at the following internet address: https://en.meigsmart.com/.

Important Notice to OEM integrators

1. This module is limited to OEM installation ONLY.

2. This module is limited to installation in fixed applications, according to Part 1.1307

3. The separate approval is required for all other operating configurations, including portable configurations with respect to Part 2.1093 and different antenna configurations

4. For FCC Part 15.31 (h) and (k): The host manufacturer is responsible for additional testing to verify compliance as a composite system. When testing the host device for compliance with Part

15 Subpart B, the host manufacturer is required to show compliance with Part 15 Subpart B while the transmitter module(s) are installed and operating. The modules should be transmitting and the evaluation should confirm that the module's intentional emissions are compliant (i.e. fundamental and out of band emissions). The host manufacturer must verify that there are no additional unintentional emissions other than what is permitted in Part 15 Subpart B or emissions are complaint with the transmitter(s) rule(s).

The Grantee will provide guidance to the host manufacturer for Part 15 B requirements if needed.

Important Note

notice that any deviation(s) from the defined parameters of the antenna trace, as described by the
instructions, require that the host product manufacturer must notify to XXXX that they wish to change
the antenna trace design. In this case, a Class II permissive change application is required to be filed by the USI, or the host manufacturer can take responsibility through the change in FCC ID (new application) procedure followed by a Class II permissive change application.

End Product Labeling

When the module is installed in the host device, the FCC ID label must be visible through a window on the final device or it must be visible when an access panel, door or cover is easily re-moved. If not, a second label must be placed on the outside of the final device that contains the following text: “Contains FCC ID: 2APJ4-SLM310”

The FCC ID can be used only when all FCC compliance requirements are met.

Manual Information to the End User

The OEM integrator has to be aware not to provide information to the end user regarding how to install or remove this RF module in the user's manual of the end product which integrates this module. The end user manual shall include all required regulatory information/warning as show in this manual.

Federal Communication Commission Interference Statement

This device complies with Part 15 of the FCC Rules. Operation is subject to the following two conditions: (1) This device may not cause harmful interference, and (2) this device must accept any interference received, including interference that may cause undesired operation.

This equipment has been tested and found to comply with the limits for a Class B digital device, pursuant to Part 15 of the FCC Rules. These limits are designed to provide reasonable protection against harmful interference in a residential installation. This equipment generates, uses and can radiate radio frequency energy and, if not installed and used in accordance with the instructions, may cause harmful interference to radio communications. However, there is no guarantee that interference will not occur in a particular installation. If this equipment does cause harmful interference to radio or television reception, which can be determined by turning the equipment off and on, the user is encouraged to try to correct the interference by one of the following measures:

- Reorient or relocate the receiving antenna.

- Increase the separation between the equipment and receiver.

- Connect the equipment into an outlet on a circuit different from that to which the receiver is connected.

- Consult the dealer or an experienced radio/TV technician for help.

Any changes or modifications not expressly approved by the party responsible for compliance could void the user's authority to operate this equipment. This transmitter must not be co-located or operating in conjunction with any other antenna or transmitter.

List of applicable FCC rules

This module has been tested and found to comply with part 22, part 24, part 27, requirements for Modular Approval.

The modular transmitter is only FCC authorized for the specific rule parts (i.e., FCC transmitter rules) listed on the grant, and that the host product manufacturer is responsible for compliance to any other FCC rules that apply to the host not covered by the modular transmitter grant of certification. If the grantee markets their product as being Part 15 Subpart B compliant (when it also contains unintentional-radiator digital circuity), then the grantee shall provide a notice stating that the final host product still requires Part 15 Subpart B compliance testing with the modular transmitter installed.

Antenna Installation

(1) The antenna must be installed such that 20 cm is maintained between the antenna and users,

(2) The transmitter module may not be co-located with any other transmitter or antenna.

authorization for operation.

Antenna type	Band	Gain(dBi)
Glue Stick Antenna	GSM 850	2.81
	PCS 1900	2.04
	GSM 900	2.61
	DCS 1800	2.92
	LTE B1	1.14
	LTE B2	2.04
	LTE B3	2.92
	LTE B4	2.92
	LTE B5	2.81
	LTE B7	2.16
	LTE B8	2.61
	LTE B18	3.08
	LTE B19	2.74
	LTE B20	2.74
	LTE B25	2.04
	LTE B26	3.08
	LTE B28	3.33
	LTE B34	1.60
	LTE B38	2.03
	LTE B39	1.50
	LTE B40	2.35
	LTE B41	3.36

In the event that these conditions cannot be met (for example certain laptop configurations or co-location with another transmitter), then the FCC/IC authorization is no longer considered valid and the FCC ID/IC ID cannot be used on the final product. In these circumstances, the OEM integrator will be responsible for re-evaluating the end product (including the transmitter) and obtaining a separate FCC/IC authorization.

This device is intended only for OEM integrators under the following conditions: (For module device use)

1) The antenna must be installed such that 20 cm is maintained between the antenna and users, and
2) The transmitter module may not be co-located with any other transmitter or antenna.
As long as 2 conditions above are met, further transmitter test will not be required. However, the OEM integrator is still responsible for testing their end-product for any additional compliance requirements required with this module installed.

Radiation Exposure Statement

This equipment complies with FCC radiation exposure limits set forth for an uncontrolled environment. This equipment should be installed and operated with minimum distance 20 cm between the radiator & your body.

Industry Canada Statement

This device complies with Industry Canada's licence-exempt RSSs. Operation is subject to the

following two conditions:

(1) This device may not cause interference; and

(2) This device must accept any interference, including interference that may cause undesired

operation of the device.

Le présent appareil est conforme aux CNR d'Industrie Canada applicables aux appareils radio exempts de licence. L'exploitation est autorisée aux deux conditions suivantes:

(1) l'appareil ne doit pas produire de brouillage, et

(2) l'utilisateur de l'appareil doit accepter tout brouillage radioélectrique subi, même si le brouillage est susceptible d'en compromettre le fonctionnement."

Radiation Exposure Statement

This equipment complies with IC radiation exposure limits set forth for an uncontrolled environment. This equipment should be installed and operated with minimum distance 20 cm between the radiator & your body.

Déclaration d'exposition aux radiations:

Cet équipement est conforme aux limites d'exposition aux rayonnements ISED établies pour un environnement non contrôlé. Cet équipement doit être installé et utilisé avec un minimum de 20 cm de distance entre la source de rayonnement et votre corps.

This device is intended only for OEM integrators under the following conditions: (For module device use)

1) The antenna must be installed such that 20 cm is maintained between the antenna and users, and
2) The transmitter module may not be co-located with any other transmitter or antenna.
As long as 2 conditions above are met, further transmitter test will not be required. However, the OEM integrator is still responsible for testing their end-product for any additional compliance requirements required with this module installed.

Cet appareil est conçu uniquement pour les intégrateurs OEM dans les conditions suivantes: (Pour utilisation de dispositif module)

1) L'antenne doit être installée de telle sorte qu'une distance de 20 cm est respectée entre l'antenne et les utilisateurs, et
2) Le module émetteur peut ne pas être coïmplanté avec un autre émetteur ou antenne.

Tant que les 2 conditions ci-dessus sont remplies, des essais supplémentaires sur l'émetteur ne seront pas nécessaires. Toutefois, l'intégrateur OEM est toujours responsable des essais sur son produit final pour toutes exigences de conformité supplémentaires requis pour ce module installé.

IMPORTANT NOTE:

In the event that these conditions can not be met (for example certain laptop configurations or colocation with another transmitter), then the Canada authorization is no longer considered valid and the IC ID can not be used on the final product. In these circumstances, the OEM integrator will be responsible for re-evaluating the end product (including the transmitter) and obtaining a separate Canada authorization.

NOTE IMPORTANTE:

Dans le cas où ces conditions ne peuvent être satisfaites (par exemple pour certaines configurations d'ordinateur portable ou de certaines co-localisation avec un autre émetteur), l'autorisation du Canada n'est plus considéré comme valide et l'ID IC ne peut pas être utilisé sur le produit final. Dans ces circonstances, l'intégrateur OEM sera chargé de réévaluer le produit final (y compris l'émetteur) et l'obtention d'une autorisation distincte au Canada.

End Product Labeling

This transmitter module is authorized only for use in device where the antenna may be installed such that 20 cm may be maintained between the antenna and users. The final end product must be labeled in a visible area with the following: “Contains IC: 23860-SLM310”.

Plaque signalétique du produit final

Ce module émetteur est autorisé uniquement pour une utilisation dans un dispositif où l'antenne peut être installée de telle sorte qu'une distance de 20cm peut être maintenue entre l'antenne et les utilisateurs. Le produit final doit être étiqueté dans un endroit visible avec l'inscription suivante:
"Contient des IC: 23860-SLM310 ".

Manual Information To the End User

The OEM integrator has to be aware not to provide information to the end user regarding how to install or remove this RF module in the user's manual of the end product which integrates this module.

The end user manual shall include all required regulatory information/warning as show in this manual.

Manuel d'information à l'utilisateur final

L'intégrateur OEM doit être conscient de ne pas fournir des informations à l'utilisateur final quant à la façon d'installer ou de supprimer ce module RF dans le manuel de l'utilisateur du produit final qui intègre ce module.

Le manuel de l'utilisateur final doit inclure toutes les informations réglementaires requises et avertissements comme indiqué dans ce manuel.

Revision History

serial Number	version Number	Time	Author	Reason for Revision
1	V1.00	2023-08	Hardware Department	1. Initial establishment
2	V1.01	2023-11	Hardware Department	1. Updata diagram

Content

1. Introduction 11
1.1 Safety Instruction 12
1.2 Document Purpose 12
1.3 Content 12
2. Product Overview 13
2.1 Basic Description 13
2.2 Main Performance 14
3. Application Interface 16
3.1 Basic Description 16
3.2 LCC Interface Definition 17
3.3 Pin Description 18
3.4 Power 28
3.4.1 Power Supply 28
3.4.2 Reduce Voltage Drop 29
3.4.3 Power Supply Reference Circuit 29
3.4.4 VDD_EXT Voltage Output 30
3.5 Switch Machine 30
3.5.1 PWRKEY Pin Power on 30
3.5.2 Shutdown 31
3.6 Reset Function 32
3.6.1 Hardware Reset 32
3.6.2 AT Command Reset 33
3.7 USIM/SIM Interface 33
3.8 USB Interface 35
3.8.1 USB Pin Description 35
3.8.2 USB Reference Circuit 35
3.9 Serial Port 36
3.10 Status Indication 38
3.11 Low Power Mode 39
3.11.1 Airplane Mode 39
3.11.2 Sleep Mode 40
3.11.3 Ultra Low Power Mode 40
3.12 ADC Function 40
3.13 USB_BOOT Interface 40
4. Antenna Ports 41
4.1 Introduction of Antenna Interface 41
4.2 RF Reference Circuit 42
4.2.1 Antenna Connection Reference Design 42
4.2.2 RF Signal Line Layout 43
4.3 Antenna installation 44
4.3.1 RF Receive Sensitivity 44
4.3.2 Operating Frequency 45
4.3.3 OTA Antenna Requirements 46
5. Electrical Characteristics 47
5.1 Limited Voltage Range 47
5.2 Ambient Temperature Range 47
5.3 ESD Characteristics 47
6. Mechanical Characteristics 48
6.1 Module Mechanical Dimensions 48
6.2 Recommended Package 50
6.3 Module Top View 51
6.4 Module Bottom View 51
7. Storage and Production 52
MeiG Smart Technology Co., Ltd. 52
2nd Floor,Office Building,No.5 Lingxia Road,Fenghuang,Fuyong Street,Bao'an District,Shenzhen City. 52

Tel : 0755-83213556.....52
Website: www.meigchina.com.....52

1. Introduction

This document defines SLM310 and the air interface and hardware interface between module and customer application.

This document can help customers quickly understand the SLM310 module interface specifications, electrical characteristics, mechanical specifications and related product information. With the help of this document, combined with our application manual and user guide, customers can quickly apply the SLM310 module to wireless applications.

SLM310 wireless module is a broadband wireless terminal product suitable for TDD-LTE/FDD-LTE / GSM multiple network standards and multiple frequency bands.

Access rates supported by SLM310:

- TDD-LTE: 8Mbps/2Mbps
- FDD-LTE: 10Mbps/5Mbps
- GPRS : 85.6 kbps / 85.6 kbps .

Except wireless data access, SLM310 can provide functions such as SMS, and can be widely used in M2M fields, it can be widely used in industrial meter, shared equipment, security monitoring and other products.

1.1 Safety Instruction

You can ensure personal safety and help protect your product and work environment from potential damage by following the safety principles.

1.2 Document Purpose

This article elaborates the basic functions, main features, hardware interface and its use method, structural characteristics, power consumption index and electrical characteristics of SLM310 wireless module in detail, and guides users to apply SLM310 module to various application terminals.

1.3 Content

This article is divided into the following parts:

- Chapter 1, mainly introduces security instructions, document purpose, revision history, etc.;
- Chapter 2 describes the basic functions and main features of SLM310 wireless module;
- Chapter 3 describes the functions, characteristics and usage of each hardware interface in detail;
- Chapter 4, related information and precautions of antenna interfaces ;
- Chapter 5 describes SLM310 electrical characteristics in detail;
- Chapter 6 describes in detail the features and precautions of SLM310 structure;
- Chapter 7, describes in detail SLM310 precautions in storage and production ;
- Chapter 8, Appendix A Reference Documents and Term Abbreviations;

2. Product Overview

2.1 Basic Description

SLM310 is a wireless communication module that supports TDD - LTE/FDD-LTE/GSM. It supports TDD-LTE, FDD-LTE, GPRS network data connection, and can provide customers with SMS and other functions. It supports, GPS/BDS/GLONASS/Galileo/ QZSS.

Table 1 Frequency bands supported by SLM310

Network	SLM310
TDD-LTE	B34/B38/B39/B40/B41
FDD-LTE	B1/B2/B3/B4/B5/B7/B8/B18/B19/B20/B25/B26/B28
GSM	850/900/1800/1900

SLM310 adopts an advanced highly integrated design scheme, which integrates the radio frequency and baseband on a PCB to complete the function of wireless reception, transmission, baseband signal processing and audio signal processing. It is a single-sided layout and the module structure size is: 31.0(±0.15)×28.0(±0.15)×2.4(±0.15)mm. It can be widely used in M2M fields, and it used in fixed product such as industrial meter, shared equipment, security monitoring and other fixed products.

2.2 Main Performance

The following table shows the performance of SLM310 module.

Table 2List of main features of module

Parameter	Description
Power	● VBAT supply voltage range: 3.5 V～ 4.2 V ● Typical supply voltage: 3.8 V
Transmit power	● Class 4 (33dBm±2dB) for GSM900 PCL5 ● Class 1 (30dBm±2dB) for DCS1800 PCL0 ● Class E2 (27dBm±3dB) for GPRS900 PCL8 ● Class E2 (26dBm±3dB) for GPRS1800 PCL2 ● Class 3 (23dBm± 2.7 dB) for FDD-LTE bands ● Class 3 (23dBm± 2.7 dB) for TDD-LTE bands
LTE features	● Maximum support CAT 1 Bis ● Support 1.4 ~ 20MHz RF bandwidth ● FDD: Maximum UL rate 5 Mbps, maximum DL rate 10Mbps ● TDD: maximum UL rate 2Mbps, maximum DL rate 8Mbps
GSM features	R99: ● CSD transmit rate: 9.6kbps, 14.4kbps GPRS: ● Transmit rate: 85.6 kbps / 85.6 kbps ● Support GPRS multi-slot class 12 (default is 12) ● Encoding format: CS-1/CS-2/CS-3 and CS-4 ● Up to 4 RX slots per frame
Network Protocol Features	● TCPIP/UDP/HTTP(S)/MQTT/FTP/SSL
USIM card interface	● Support USIM/SIM card: 1.8V and 3V
Audio features	● Support 1 channel digital audio interface: PCM interface ● Support one analog MIC signal input interface ● Support one channel of speaker signal output interface (0.8W@4.2V/Class D, 0.5W@4.2V/Class AB)
PCM interface	● For audio use, an external codec chip is required
USB interface	● Support USB2.0 ● Used for AT commands, data transfer, software debugging and software upgrade ● USB drive: Support Windows7, Windows 8/8.1, Windows10
Serial port	Main serial port: ● For AT commands and data transfer ● The baud rate defaults to 115200bps ● Support RTS and CTS hardware flow control Debug serial port: ● Used for R&D debugging , AP log output ● The baud rate defaults to 115200bps
SD card interface	● Compliant with SD2.0 protocol
AT command	● Compliant with 3GPP TS 27.007, 27.005

Network indication	● NET_STATUS, NET_MODE these two pins indicate the network status
Antenna interface	SLM310 ● Main Antenna Interface (ANT_MAIN) ● GNSS Antenna Interface(ANT_GNSS)
Physical properties	● Dimensions: 31.0(±0.15)×28.0(±0.15)×2.4(±0.15) mm
Temperature range	● Normal working temperature: -30 ℃～+75℃ ● Storage temperature: -40 ℃ ～ + 90 ℃
Software upgrade	● USB interface,OTA
RoHS	● All devices are fully EU RoHS compliant
Environment humidity	● 5%~95%
Interface	● 144Pin LCC +LGA interface
LCC functional interface	● Power interface ● USB2.0 High-Speed interface ● UART interface ● USIM/SIM card interface (support 3V, 1.8V) ● PCM interface ● MIC input interface ● Speaker output interface ● Hardware reset interface ● Indicator light interface ● keyboard interface ● sleep control interface ● Airplane Mode Control Interface ● ADC interface ● I2C interface ● SPI interface ● SD card interface ● USB_BOOT interface

3. Application Interface

3.1 Basic Description

SLM310 adopts 80 pin LCC+64 pin LGA package, providing the following functional interfaces:

- Power interface
- USB2.0 High-Speed interface
- UART interface
- USIM/SIM card interface (support 3V, 1.8V)
- PCM interface
- MIC input interface
- Speaker output interface
- Hardware reset interface
- Indicator light interface
- keypad interface
- sleep control interface
- Airplane Mode Control Interface
- ADC interface
- I2C interface
- SPI interface
- SD card interface
- USB_BOOT interface

3.2 LCC Interface Definition

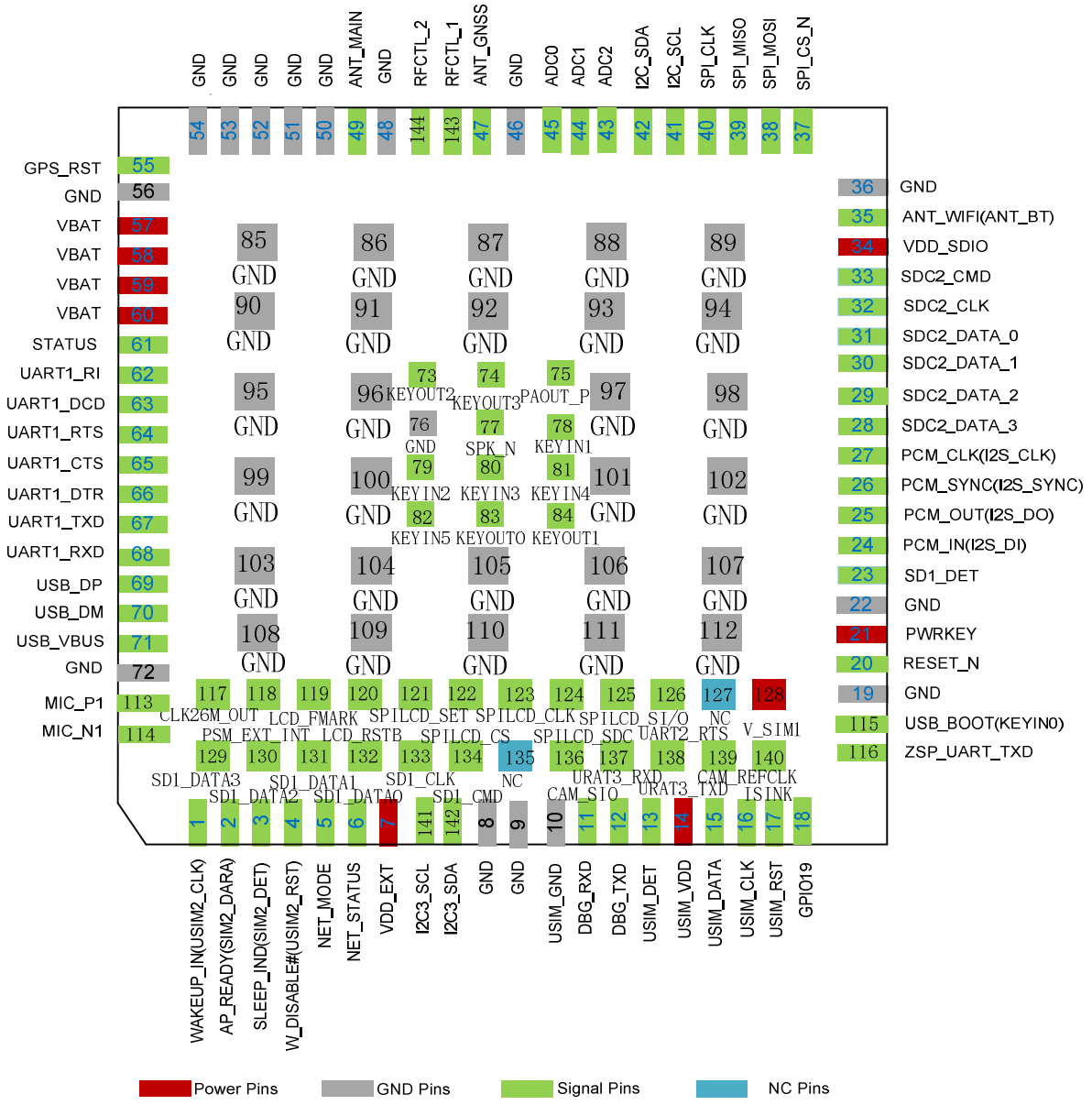

Figure 1Module serial number pin diagram

Remark:

Module serial number pin diagram is the actual wiring name inside the module;

3.3 Pin Description

The following table shows the definition of each pin of SLM310 module.

Table4 IO parameter definition

Type	Describe
IO	Input and output bidirectional signal.
DI	Digital input signal.
DO	Digital output signal.
OD	Open-drain output signal.
AI	Analog signal input
BOT	Bidirectional signal with open-drain output.
PI	power input.
PO	Power Output.
G	Ground

Table 3Pin Description

Pin Number	Pin Name	I/O	Level	Describe	Remark
1	WAKEUP_IN(USIM2_CLK)	I/O	VILnom = 0V _ _ VIH nom = 1.8 V	External device wake-up module USIM2_CLK Leave empty if not used	GPIO29
2	AP_READY(USIM2_DATA)	I/O	VILnom=0V VIHnom=1.8V	Module detects whether the host is sleeping USIM2_DATA Leave empty if not used	GPIO30
3	SLEEP_IND(USIM2_DET)	I/O	VOL nom =0V VOHnom = 1.8V _ _	System sleep indicator USIM2_DET Leave empty if not used	GPIO23
4	W_DISABLE#(USIM2_RST)	I/O	VILnom=0V VIHnom=1.8V	Modular flight mode control USIM2_RST Leave empty if not used	GPIO31
5	NET_MODE	I/O	VOLnom=0V VOHnom=1.8V	Module network mode indication signal Leave empty if not used	GPIO13

6	NET_STATUS	I/O	VOLnom=0V VOHnom=1.8V	Module network status indication signal Leave empty if not used	GPIO19
7	VDD_EXT	PO	1.8V	Module digital level, 1.8V output, 50mA load capacity Leave empty if not used	
8	GND	G		GND	
9	GND	G		GND	
10	USIM_GND	G		GND	
11	DBG_RXD	I	VILnom=0V VIHnom=1.8V	DEBUG serial port receive Leave empty if not used	
12	DBG_TXD	O	VOLnom=0V VOHnom=1.8V	DEBUG serial port send Leave empty if not used	
13	USIM_DET	I	VILnom=0V VIHnom=1.8V	USIM card hot swap detection Leave empty if not used, and the software will turn off the detection function.	GPIO14
14	USIM_VDD	PO	1.8V/3.0V	USIM power supply	
15	USIM_DATA	I/O	1.8V/3.0V	USIM data signal line	
16	USIM_CLK	O	1.8V/3.0V	USIM clock signal line	

17	USIM_RST	O	1.8V/3.0V	USIM reset signal line	
18	GPIO19_STATUS	IO	VILnom=0V VIHnom=1.8V	Leave empty if not used	GPIO19
19	GND	G		GND	
20	RESET_N	I	VILnom=0V VIHnom=VBAT	Module reset signal, active low	
21	PWRKEY		VILnom=0V VIHnom=VBAT	Module on/off signal, active low	
22	GND	G		GND	
23	SD1 _DE T	I	VILnom=0V VIHnom=1.8V	SD card hot plug detection signal Leave empty if not used	GPIO15
24	PCM_IN(I2S_DI)	I	VILnom=0V VIHnom=1.8V	PCM data input Leave empty if not used	
25	PCM_OUT(I2S_DO)	O	VOLnom=0V VOHnom=1.8V	PCM data output Leave empty if not used	
26	PCM_SYNC(I2S_SY NC)	I/O	0V/1.8V	PCM data sync signal Leave empty if not used	
27	PCM_CLK(I2S_CLK)	I/O	0V/1.8V	PCM clock signal Leave empty if not used	
28	SDC2_DATA_3	I/O	1.8V/3.0V	SDC2_DATA_3 Leave empty if not used	GPIO28

29	SDC2_DATA_2	I/O	1.8V/3.0V	SDC2_DATA_2 Leave empty if not used	GPIO27
30	SDC2_DATA_1	I/O	1.8V/3.0V	SDC2_DATA_1 Leave empty if not used	GPIO26
31	SDC2_DATA_0	I/O	1.8V/3.0V	SDC2_DATA_0 Leave empty if not used	GPIO25
32	SDC2_CLK	O	1.8V/3.0V	SDC2_CLK Leave empty if not used	
33	SDC2_CMD	O	1.8V/3.0V	SDC2_CMD Leave empty if not used	GPIO24
34	VDD_SDIO	PO	1.8V/3.0V	SD card pull-up power, power supply capacity 150mA	
35	GND	G		GND	
36	SPI_CS	O	VOLnom=0V VOHnom=1.8V	SPI chip select signal Leave empty if not used	GPO2
37	SPI_MOSI	O	VOLnom=0V VOHnom=1.8V	SPI_MOSI Leave empty if not used	GPO3
38	SPI_MISO	I	VILnom=0V VIHnom=1.8V	SPI_MISO Leave empty if not used	GPO4
39	SPI_CLK	O	VOLnom=0V VOHnom=1.8V	SPI_CLK Leave empty if not used	GPO1
40	I2C_SCL	DO	VOLnom=0V VOHnom=1.8V	I2C interface clock signal Leave empty if not used	

41	I2C_SDA	DO	0V/1.8V	I2C interface data signal Leave empty if not used	GPIO17
42	ADC2	A I		Analog-to-Digital Converter Interface 2 1k in series, and leave empty if not used	
43	ADC1	A I		Analog-to-Digital Converter Interface 1 1k in series , and leave empty if not used	
44	ADC0	A I		Analog to Digital Converter Interface 0 1k in series , and leave empty if not used	
45	GND	G		Ground	
46	ANT_GNSS	I		GNSS Antenna Leave empty if not used	Version of China /European don't support this feature
47	GND	G		Ground	
48	ANT_MAIN	I/O		Main set antenna	
49	GND	G		Ground	
501	GND	G		Ground	
51	GND	G		Ground	

52	GND	G		Ground	
53	GND	G		Ground	
54	GPS_RST	I	VILnom=0V VIHnom=1.8V	GPS RST Leave empty if not used	Version of China /European don't support this feature
55	GND	G		Ground	
56-60	VBAT	PI	Vmax = 4.2V Vmin = 3.5V Vnorm = 3.8V	Baseband power input	Connect to VBAT
61	STATUS_SINK	OD	VOLnom=0V VOHnom=1.8V	Reserved Status Indication Interface Leave empty if not used	OD Interface
62	UART1_RI	O	VOLnom=0V VOHnom=1.8V	Module output ringing prompt Leave empty if not used	GPIO22
63	UART1_DCD	O	VOLnom=0V VOHnom=1.8V	Serial carrier detection Leave empty if not used	Can be multiplexed as UART2_TXD
64	UART1_RTS	I	VOLnom=0V VOHnom=1.8V	Module request to send	GPIO19 Internal direct connection, external crossover
65	UART1_CTS	O	VOLnom=0V VOHnom=1.8V	Module clear to send	GPIO18 Internal direct connection, external crossover
66	UART1_DTR	O	VOLnom=0V VOHnom=1.8V	Data terminal ready	GPIO20(After power-on reset 5ms, the level changes from L to H)

					UART1_DTR can be reused as UART2_RXD
67	UART1_TXD	O	VOLnom=0V VOHnom=1.8V	Module sends data Leave empty if not used	UART1_TXD for AT commands
68	UART1_RXD	I	VILnom=0V VIHnom=1.8V	Module receives data Leave empty if not used	UART1_RXD for AT commands
69	USB_DP	I/O		USB signal DP	
70	USB_DM	I/O		USB signal DM	
71	USB_VBUS	PI	Vnorm=5.0V	USB Insertion Detection Signal	
72	GND	G		Ground	
73	KEYOUT2	O		Keyboard matrix output signal Leave empty if not used	
74	KEYOUT3	O		Keyboard matrix output signal Leave empty if not used	
75	PAOUT_P	O		PAOUT_P Leave empty if not used	
76	RESERVED			NC	
77	PAOUT_N	O		PAOUT_N Leave empty if not used	

78	KEYIN1	I	VILnom=0V VIHnom=1.8V	Keyboard matrix input signal Leave empty if not used	
79	KEYIN2	I	VILnom=0V VIHnom=1.8V	Keyboard matrix input signal Leave empty if not used	
80	KEYIN3	I	VILnom=0V VIHnom=1.8V	Keyboard matrix input signal Leave empty if not used	
81	KEYIN4	I	VILnom=0V VIHnom=1.8V	Keyboard matrix input signal Leave empty if not used	
82	KEYIN5	I	VILnom=0V VIHnom=1.8V	Keyboard matrix input signal Leave empty if not used	
83	KEYOUT0	O	VOLnom=0V VOHnom=1.8V	Keyboard matrix output signal Leave empty if not used	
84	KEYOUT1	O	VOLnom=0V VOHnom=1.8V	Keyboard matrix output signal Leave empty if not used	
85-112	GND	G		Ground	
113	MIC_P1	I	VOLnom=0V VOHnom=1.8V	MIC_P1 Leave empty if not used	
114	MIC_N1	I	VOLnom=0V VOHnom=1.8V	MIC_P1 Leave empty if not used	
115	KEYIN0(USB_BOOT)	I	VILnom=0V VIHnom=1.8V	USB_BOOT Short-circuit with VDD_EXT to enter emergency download mode	Multiplexed here as USB_BOOT
116	ZSP_UART_TXD	O	VOLnom=0V VOHnom=1.8V	Output CP log	UART2_CTS

117	CLK26M_OUT	O		CLK26M_OUT Leave empty if not used	Level around 0.8V
118	PSM_EXT_INT	I	VILnom=0V VIHnom=1.8V	Ultra-low power external interrupt signal	
119	LCD_FMARK	O	1.8V/3.0V	LCD_FMARK Leave empty if not used	GPIO5
120	LCD_RST	O	1.8V/3.0V	LCD_RSTB Leave empty if not used	
121	SPILCD_SEL	O	1.8V/3.0V	SPILCD_SEL Leave empty if not used	GPIO4
122	SPILCD_CS	O	1.8V/3.0V	SPILCD_CS Leave empty if not used	GPIO3
123	SPILCD_CLK	O	1.8V/3.0V	SPILCD_CLK Leave empty if not used	GPIO2
124	SPILCD_SDC	O	1.8V/3.0V	SPILCD_SDC	GPIO1
125	SPILCD_SI/O	I/O	1.8V/3.0V	SPILCD_SI/O Leave empty if not used	GPIO0
126	UART2_RTS	I	VILnom=0V VIHnom=1.8V	Module clear to send Leave empty if not used	
127	NC			NC	
128	USIM2_VDD			USIM power supply	

129	SD1_DATA3	I/O	1.8V	SD1_DATA3 Leave empty if not used	GPIO12
130	SD1_DATA2	I/O	1.8V	SD1_DATA2 Leave empty if not used	GPIO11 (The boot process outputs high levels)
131	SD1_DATA1	I/O	1.8V	SD1_DATA1 Leave empty if not used	GPIO10 (The boot process outputs high levels)
132	SD1_DATA0	I/O	1.8V	SD1_DATA0 Leave empty if not used	GPIO9 (The boot process outputs high levels)
133	SD1_CLK	O	1.8V	SD1_CLK Leave empty if not used	GPIO7
134	SD1_CMD	O	1.8V	SD1_CMD Leave empty if not used	GPIO8 (The boot process outputs high levels)
135	NC			NC	
136	CAM_SIO	I		Reserved camera data PIN Leave empty if not used	
137	UART3_RXD	I	VILnom=0V VIHnom=1.8V	UART3_RXD , UIS reserved serial port Leave empty if not used	
138	UART3_TXD	O	VOLnom=0V VOHnom=1.8V	UART3_TXD , UIS reserved serial port Leave empty if not used	
139	CAM_REFCLK	O		Reserve the CLK of the camera Leave empty if not used	The boot process outputs a 450ms clock

140	NISINK			RGB SINK Support 200mA current	
141	I2C3_SCL	OD	VOLnom=0V VOHnom=1.8V	I2C3_SCL Leave empty if not used	
142	I2C3_SDA	OD	VOLnom=0V VOHnom=1.8V	I2C3_SDA Leave empty if not used	
143	RFCTL_1	O	VOLnom=0V VOHnom=1.8V	RFCTL_1 Leave empty if not used	The actual connection of RFCTL_ 3 inside the module
144	RFCTL_2	O	VOLnom=0V VOHnom=1.8V	RFCTL_2 Leave empty if not used	The actual internal connection of the module is RFCTL_ 4

Remark:

1. * means that the function is under development;

2. The above interface functions are not supported at the same time, some pins are multiplexed functions, please pay attention when choosing!

3. SLM310 pin multiplexing see “SLM310 _GPIO function multiplexing”

3.4 Power

Table 6 SLM310 module power interface description

Pin Name	I/O	Pin	Description
VBAT	PI	57,58,59,60	Module power supply, 3.5~4.2V, nominal value 3.8V
VDD_EXT	PO	7	Voltage output, 1.8V
GND	G	8,9,10,19,22,36,46,48,50-54,56,72,76，85-112	Land

3.4.1 Power Supply

The SLM310 module needs to be powered through the VBAT pin. The recommended power supply design is shown in Figure 3:

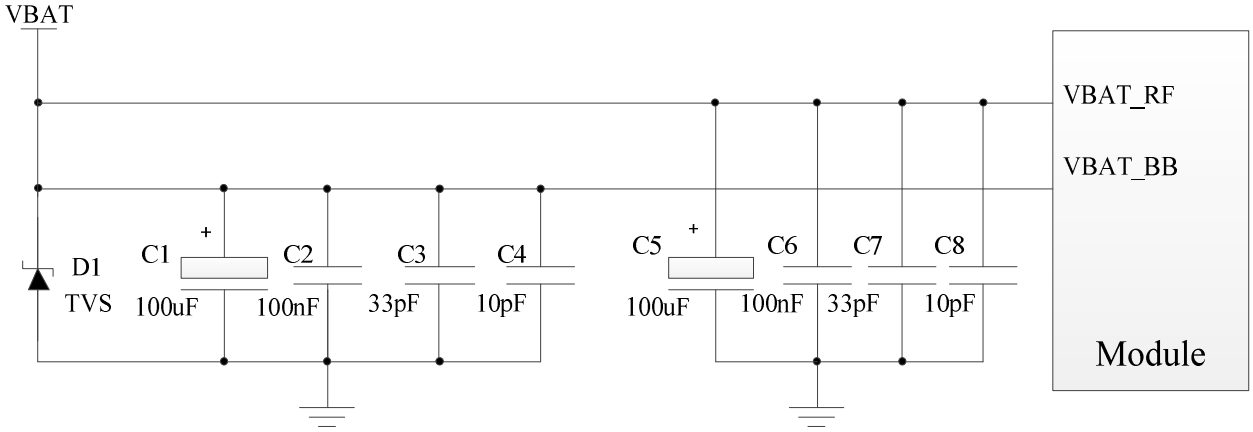

Figure 3 Module power supply circuit

3.4.2 Reduce Voltage Drop

The power supply range of SLM310 is 3.5V~4.2V. During data transmission or calls, instantaneous high-power transmission will form a current peak value of up to 2A, which will cause large ripples in VBAT. The module will reboot or shut down. In order to ensure normal operation, the power supply must have sufficient power supply capacity, and the input voltage should not be lower than 3.5V.

Figure 4 below shows the voltage drop during burst transmission under the 2G network. The voltage drop under the 4G network is smaller than that under the 2G network.

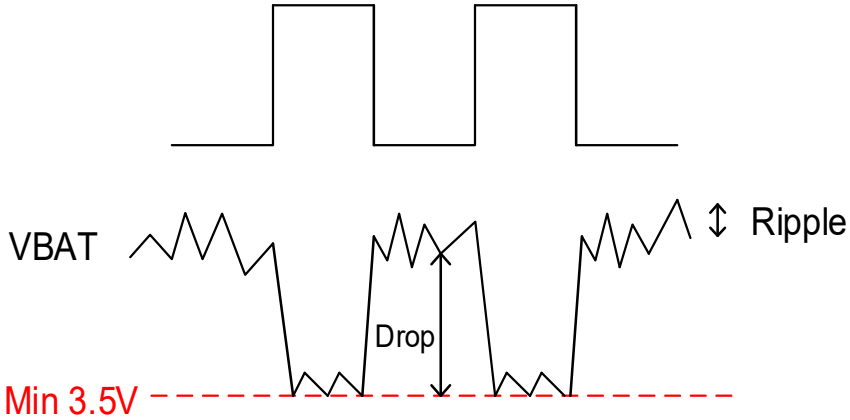

Figure 4 Burst transfer power requirements

To reduce voltage drop, a low ESR 100uF filter capacitor is required. Chip multilayer ceramic capacitors (MLCC) have the best ESR. It is recommended to add 6 ceramic capacitors (100nF, 33pF, 10pF) to the VBAT pins respectively, and the capacitors should be placed close to the VBAT pin. At the same time, in order to ensure better power supply performance, a TVS tube is added near the VBAT input end of the module to improve the electrostatic tolerance. The VBAT trace width should not be less than 2mm. In principle, the longer the VBAT trace, the wider the trace width.

3.4.3 Power Supply Reference Circuit

The design of power supply is very important because the performance of the module is largely determined by the power supply. Therefore SLM310 must choose a power supply with at least 2A of current. If the voltage difference between the input voltage and the power supply voltage is not very large, it is

recommended to choose an LDO as the power supply. If not, it is recommended to use DCDC as the power supply.

The following figure is the reference design of the +5V power supply circuit. The design uses an LDO from Micrel, model MIC29302WU. Its typical output voltage is 3.9V, and the peak load current reaches 3A.

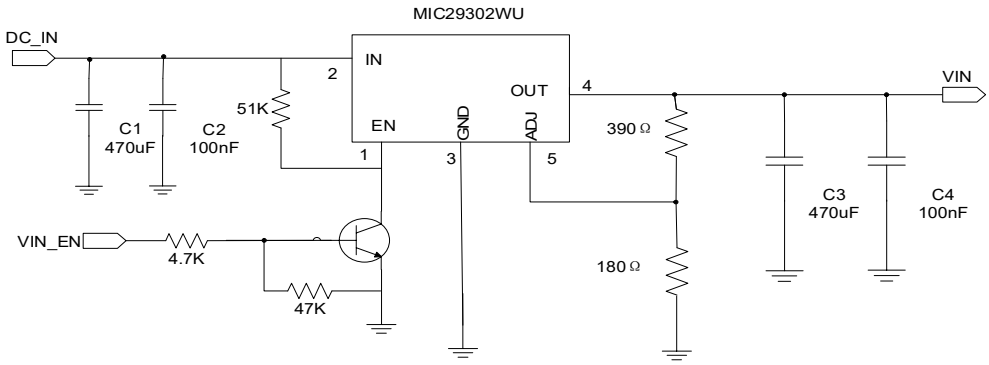

Figure 5 Power Input Reference Design

3.4.4 VDD_EXT Voltage Output

When the SLM310 module is powered on normally, Pin7 output voltage is 1.8V and current load is 50mA. This output voltage can be used as an external pull-up source, such as level reference.

3.5 Switch Machine

3.5.1 PWRKEY Pin Power on

When the SLM310 module is in shutdown mode, the module can be powered on by pulling down PWRKEY for at least 2s. It is recommended to use an open collector driver circuit to control the PWRKEY pin. The reference circuit is as follows:

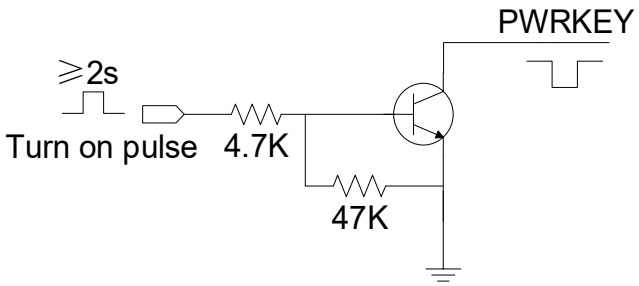

Figure 6 Open collector driver reference boot circuit

Another way to control the PWRKEY pin is to directly use a button switch. A TVS should be placed near the button for ESD protection. The reference circuit is as follows:

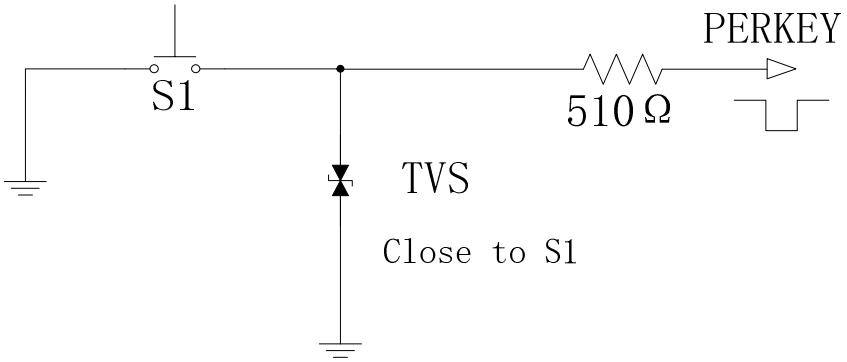

Figure 7 Button boot reference circuit

The boot sequence is shown in the figure below:

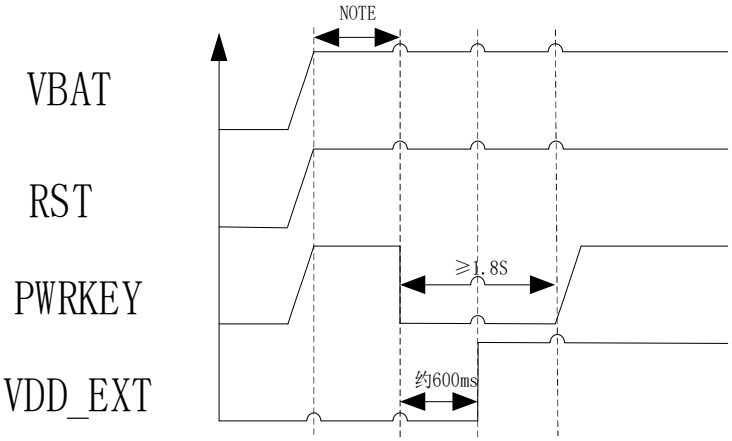

Figure 8 Boot sequence diagram

Remark:
Before pulling down the PWRKEY pin, make sure that the VBAT voltage is stable. It is recommended that the time interval between powering up VBAT and pulling the PWRKEY pin low is no less than 30ms.
If the module needs to be powered on automatically, the PWRKEY pin can be directly connected to the ground. The maximum resistance to ground cannot exceed 1k, and 0R is recommended. In this way, shutdown can only be done by direct powered off.

3.5.2 Shutdown

Table 7 Three shutdown modes:

Shutdown method	Shutdown method	Applicable scene
Low voltage shutdown	When VBAT voltage is too low or power down, the module will shutdown	At this time, the module does not perform the normal shutdown process, and does not go through the process of logging out from the base station.
Hardware shutdown	Pull down PWRKEY (greater than 3s), then release	Normal shutdown
AT shutdown	AT+CPOF	Software shutdown

Remark:

1. When the module is working normally, do not cut off the power of the module immediately to avoid damaging the Flash data inside the module. It is strongly recommended to turn off the module through the AT command before disconnecting the power.

2. When using the AT command to shut down, make sure that PWRKEY is always in a high level state after the shutdown command is executed, otherwise the module will automatically restart after shutting down.

3.6 Reset Function

There are two reset methods for SLM310: hardware reset and AT command reset.

3.6.1 Hardware Reset

When the module is working, pull down the RESET_N pin for at least 150ms to reset the module. The RESET_N signal is sensitive to interference, so it is recommended that the traces on the module interface board should be as short as possible, and should be handled with the ground.

The reference circuit is similar to the PWRKEY control circuit, and customers can use an open-collector drive circuit or a button to control the RESET_N pin.

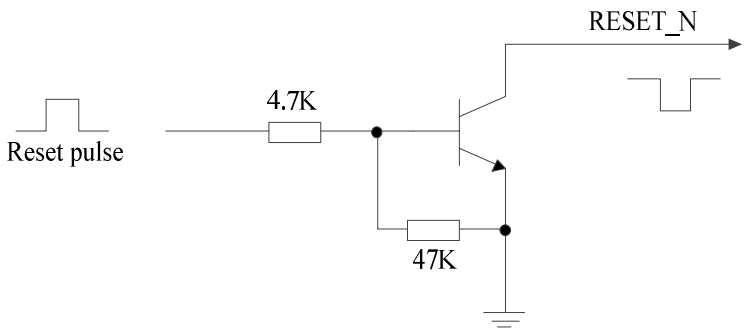

Figure 9 RESET_N reset open collector reference circuit

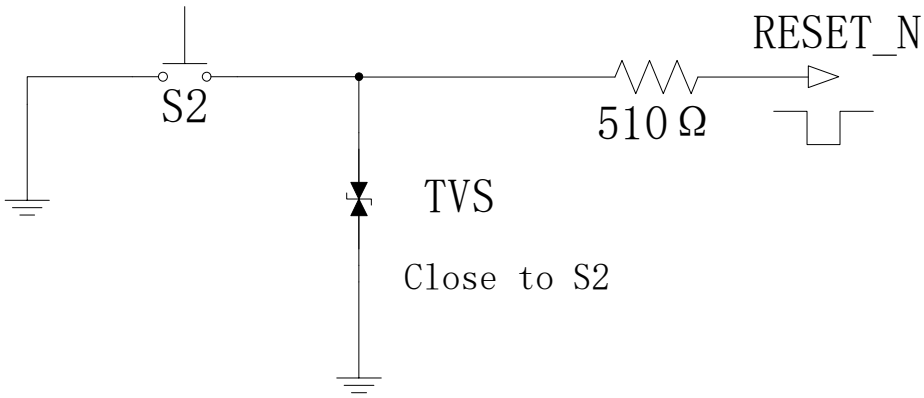

Figure 10 RESET_N reset button reference circuit

The reset timing diagram is as follows:

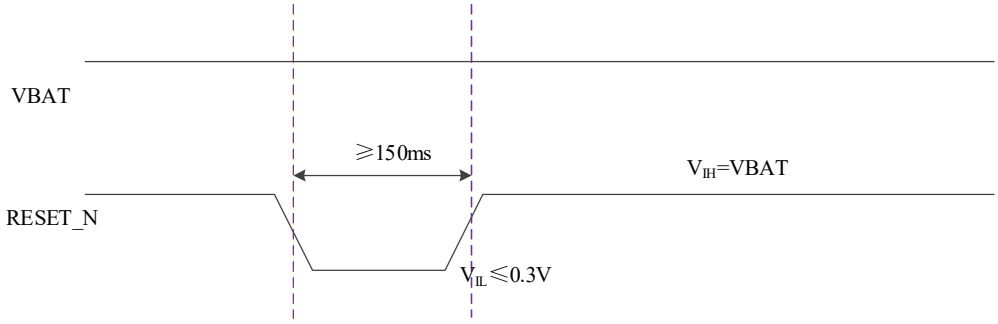

Figure 11 RESET_N reset timing diagram

3.6.2 AT Command Reset

Input AT+TRB command through SLM310 UART or USB AT port to reset and restart SLM310.

3.7 USIM/SIM Interface

SLM310 supports 1.8V and 3.0V SIM cards.

Table 8 USIM/SIM interface description

Pin name	I/O	Pin	Pin description
USIM_DATA	I/O	15	USIM/SIM data signal
USIM_CLK	O	16	USIM/SIM clock signal
USIM_RST	O	17	USIM/SIM reset signal
USIM_VDD	O	14	USIM/SIM power supply
USIM_DET	I	13	USIM/SIM hot plug detection signal
WAKEUP_IN(USIM2_CLK)	I/O	1	USIM2 clock signal
AP_READY(USIM2_DATA)	I/O	2	USIM2 data signal
SLEEP_IND(USIM2_DET)	I/O	3	USIM2 hot plug detection signal
W_DISABLE#(USIM2_RST)	I/O	4	USIM2 reset signal
USIM2_VDD	PO	128	USIM2 power supply

SLM310 module supports SIM card hot plug function through SIM_DET pin and low level detection. After SIM card is inserted into the SIM card seat in the figure, when SIM_DET pin is low level and SIM_DET pin level is high, no card is detected.

The SIM card hot-swap function can be configured through the " AT+SIMHOTSWAP " command. The AT command description is shown in the following table:

Table 9 SIM card hot swap function setting description

AT command	SIM card hot swap detection	Function Description

AT+SIMHOTSWAP=1	open	By default, the SIM card hot swap detection function is enabled, and the module detects whether the SIM card is inserted through the USIM_DET pin status
AT+SIMHOTSWAP= 0	close	The SIM card hot swap detection function is disabled, the module reads the SIM card when powering on, and does not detect the USIM_DET state

After the SIM card hot-swap detection function is enabled, when USIM_PRESENCE is low, the module will execute the SIM card initialization program when it detects that the SIM card is inserted, and the module will register the network after reading the SIM card information. When USIM_PRESENCE is high, the module determines that the SIM card is pulled out, and the SIM card is not read. USIM_DET is active at high level by default, and the valid trigger level can be set through the AT+ GTSET command.

The circuit design of the SIM card with hot swap function is as shown in the figure below.

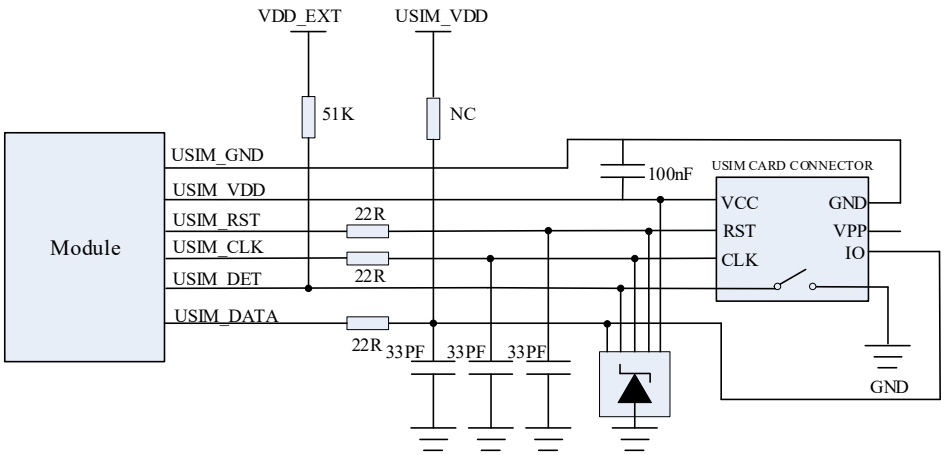

Figure 12 Reference design of card holder with hot-swap function

If you do not need to use the USIM card hot swap detection function, please keep the USIM_DET pin floating. The reference circuit is as follows:

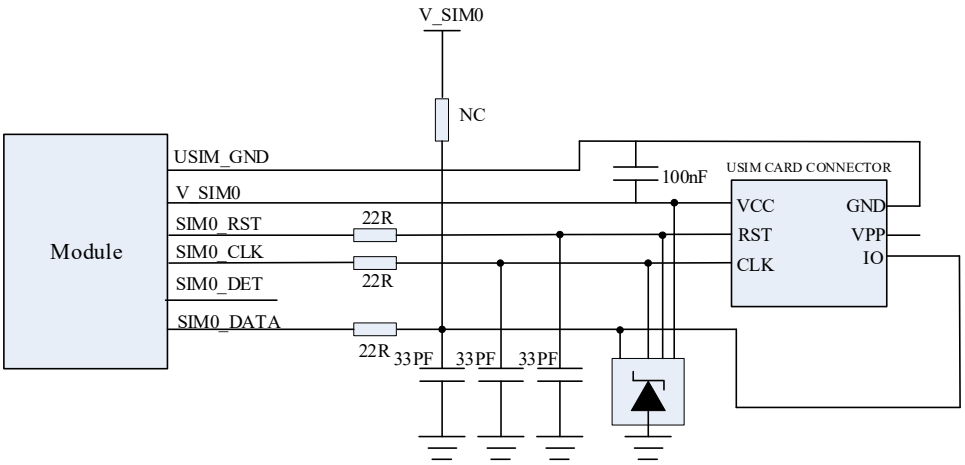

Figure 13 Reference design of card holder without hot-swap function

In the circuit design of the USIM card interface, in order to ensure the good performance and reliability of the USIM card, it is recommended to follow the following design principles in the circuit design:

- A 22Ω resistor is connected in series on the USIM_DATA, USIM_CLK and USIM_RST lines to suppress stray EMI, enhance ESD protection, and facilitate debugging;
- In order to improve the anti-static ability, add TVS tubes to the USIM_VDD, USIM_DATA, USIM_CLK and USIM_RST lines, and the parasitic capacitance is not more than 30Pf ESD protection device;
- Connect low capacity capacitors in parallel on the USIM_VDD, USIM_DATA, USIM_CLK and USIM_RST lines to filter out GSM900 interference; the peripheral devices of the USIM card should be placed as close as possible to the USIM card holder;
- The USIM card holder is placed close to the module, try to ensure that the wiring length of the USIM card signal line does not exceed 100mm ;
- The wiring of the USIM card signal line is far away from the RF line and the VBAT power line;
- In order to prevent crosstalk between USIM_CLK signal and USIM_DATA, the wiring of the two should not be too close, and a ground shield should be added between the two traces;

3.8 USB Interface

The SLM310 provides a USB interface that conforms to the USB 2.0 specification. This interface is used for AT command interaction, data transmission, software debugging and version upgrade.

3.8.1 USB Pin Description

The SLM310 module provides one USB2.0 interface.

Table 10 USB interface description

Pin name	I/O	Pin	Describe
USB_VBUS	PI	71	USB insertion detection
USB_DP	I/O	69	USB Differential Data+
USB_DM _	I/O	70	USB Differential Data -
GND	G	8,9,10,19,22,36,46,48,50-54,56,72,76,85-112	land

3.8.2 USB Reference Circuit

The SLM310 module USB interface application reference circuit is shown in the figure below.

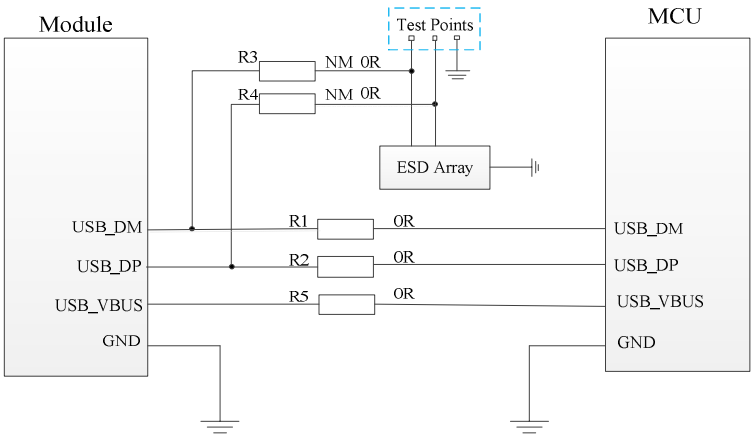

Figure 14 USB interface reference design diagram

In order to meet signal integrity of USB data line, the resistors R1/R2/R3/R4 must be placed close to the module, and the resistors need to be placed close together. The legs connecting the test points must be as short as possible.

In the design of the USB interface circuit, in order to ensure the USB performance, it is recommended to follow the following principles in the circuit design:

- The module USB_VBUS is not used to supply power to the module, but is used to detect the insertion and removal of USB;
- In order to reduce the signal interference during USB high-speed data transmission, connecting R1 and R2 in series on the USB_DM and USB_DP interface circuits can improve the accuracy of data transmission. It is recommended to use 0Ω for both R1 and R2;
- In order to improve the antistatic performance of the USB interface, it is recommended to add ESD protection devices to the USB_DP and USB_DM interface circuits, and it is recommended to use ESD devices with a junction capacitance of less than 1pF; the USB ESD protection devices should be placed as close to the USB interface as possible;
- In order to ensure the reliable operation of the USB, more consideration should be given to the protection of the USB in the design. For example, the protection of the USB during the layout needs to be controlled by 90Ω impedance for the USB_DP and USB_DM, and the wiring should be routed strictly according to the differential requirements, and the interference signal should be kept as far away as possible;
- Do not route USB cables under crystal oscillators, oscillators, magnetic devices, and RF signals. It is recommended to route the inner layer differential cables and wrap the ground on the top, bottom, left, and right sides.

3.9 Serial Port

The SLM310 module has 3 serial ports: the main serial port UART1, the debugging serial port DEBUG UART and the download, RF calibration serial port UART2. The main features of the main serial port and debug serial port are described below.

- The main serial port supports 4800bps, 9600bps, 19200bps, 38400bps, 57600bps, 115200bps, 230400bps baud rate, the default baud rate is 115200bps, used for data transmission and AT command transmission.
- The debugging serial port supports 115200bps baud rate for R&D debugging.

Table 11 Main serial port pin description

Pin name	I/O	Pin	Describe
UART1_RI	O	62	Module output ringing prompt
UART1_DCD	O	63	Serial carrier detection
UART1_RTS	I	64	Module requests to send data
UART1_CTS	O	65	module clear to send
UART1_DTR	I	66	Data terminal ready
UART1_TXD	O	67	Module sends data
UART1_RXD	I	68	Module receives data

Table 12 URAT2 serial port pin description

Pin name	I/O	Pin	Describe
UART2_TXD	O	63	Module sends data
UART2_RXD	I	66	Module receives data

Table 13 Debug serial port pin description

Pin name	I/O	Pin	Describe
DBG_RXD	I	11	Module receives data
DBG_TXD	O	12	Module sends data

Table 14 Serial port logic levels

Parameter	Minimum	Maximum value	Unit
VIL _	-0.3	0.6	V
V_{IH}	1.2	2.0	V
VOL _	0	0.45	V
VOH _	1.35	1.8	V

Serial port level of the SLM310 module is 1.8V. If the client host is 3.3V, a level converter needs to be added to the serial port application, and TI's TXB0104PWR is recommended. The following figure shows the reference design:

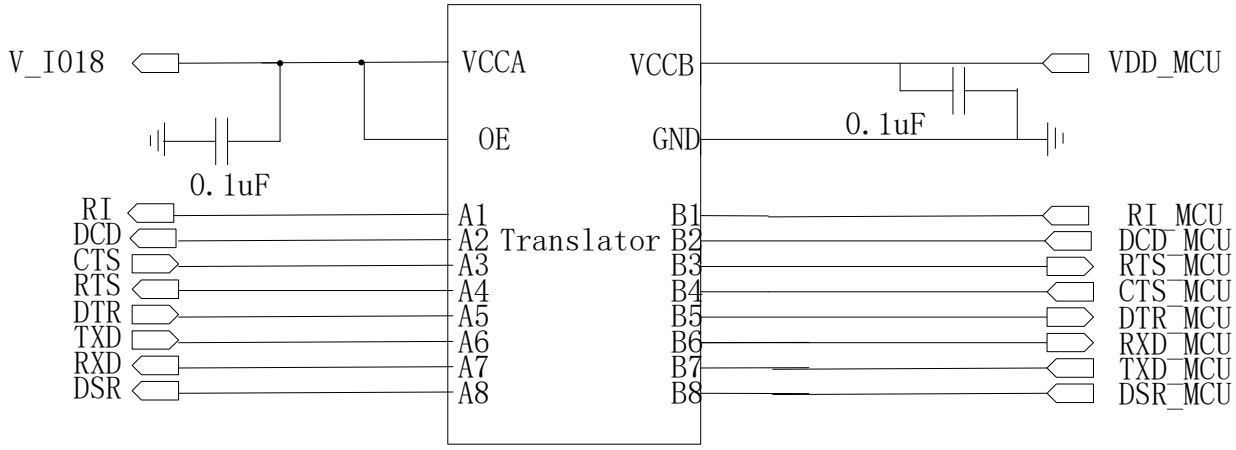

Figure 15 Level conversion chip reference circuit

Another level shifting circuit is shown in the figure below. The input and output circuit design of the dotted line part below can refer to the solid line part, but pay attention to the connection direction. At the same time, this level conversion circuit is not suitable for applications with baud rate exceeding 460Kbps.

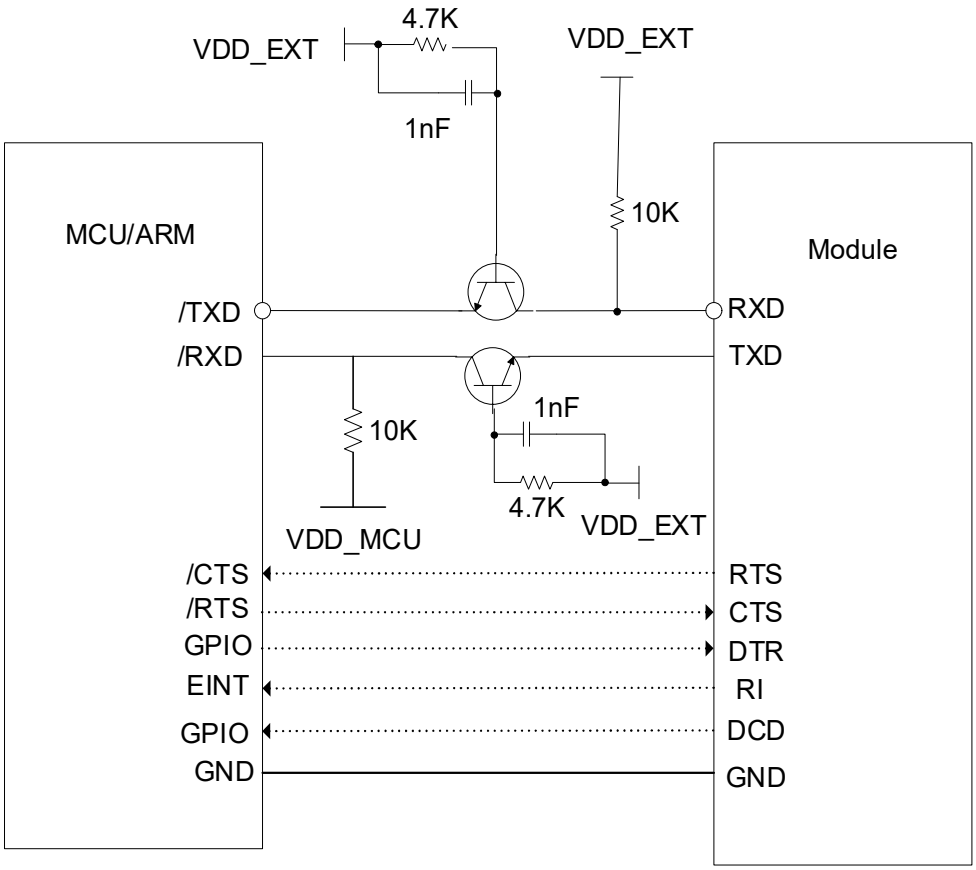

Figure 16 UART signal connection 2

Remark:

When designing, it is recommended to reserve 0R resistors and parallel capacitors on the main serial port and debug serial port lines, which can be added on the bottom plate to prevent RF interference.

3.10 Status Indication

The status indicator pin is mainly used to drive the network status indicator. SLM310 module has NET_MODE, NET_STATU (reserved, default NC) two network STATUS pins and status status pin. The following two tables describe the pin definitions and the logic level changes in different network states, respectively.

Table 15 Description of network indication pins

Pin name	I/O	Pin	Describe
NET_MODE	O	5	Module status indication
NET_STATUS	O	6	Module status indication
STATUS	OD	61	OD interface

Table 16 Working status of network indicator pins

Pin name	Pin working state	Indicated working state
NET_MODE	High level	Register LTE Network Status

	Low level	Other
NET_STATUS	Slow flash	Find network status
	Slow flash	Standby mode
	Flash fast	Data transfer mode
	High level	Calling

The reference circuit is shown in the following figure:

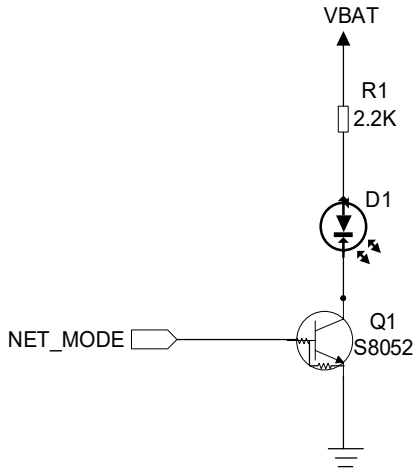

Figure 17 Reference design diagram of network indication

STATUS is used to indicate the working status of the module and is an open-drain output pin. Customers can connect this pin to the device's GPIO with pull-up or

The LEDs shown in the figure below indicate the circuit. When the module is powered on normally, STATUS defaults to a high-impedance state.

3.11 Low Power Mode

3.11.1 Airplane Mode

Table 17 W_DISABLE# pin description:

Pin name	I/O	Pin	Describe
W_DISABLE#	I	4	Modular flight mode control

The SLM310 module supports two ways to enter airplane mode:

Table 18 Description of Airplane Mode Settings

1	Hardware I/O Interface Button Control	Pull it high or leave it in the air (the default is pull up) W_DISABLE# is normal mode, pull low for flight mode
2	AT command control	AT+CFUN=4--Enter flight mode

		AT+CFUN=1--Enter normal mode

3.11.2 Sleep Mode

The module can activate sleep mode by:

AT+CSCLK=0 : Disable the DEEPSLEEP function.
AT+CSCLK=1 : When setting, DTR pin needs to be high level, or WAKEUP pin is low level, you can enter DEEPSLEEP mode;
After that, when DTR is set high or WAKEUP pin is set low, and no interrupt is generated (such as: GPIO interrupt or serial port data transfer), The GSM part will automatically enter the DEEPSLEEP mode.
AT+CSCLK=2 : When no interrupt is generated, the GSM part will automatically enter the DEEPSLEEP mode.

3.11.3 Ultra Low Power Mode

Use the following AT command to make the module enter the ultra-low power consumption mode (can be used for power consumption test)

AT^TRACECTRL=0,0
AT^TRACECTRL=1,0
AT+CSCLK=2

3.12 ADC Function

SLM310 provides three-way 12-bit analog-to-digital conversion interface, and the ADC voltage range is VBAT.

Table 19 ADC pin description

Pin name	I/O	Pin	Describe
ADC0	I	45	Analog to Digital Converter Interface 0
ADC1	I	44	Analog-to-Digital Converter Interface 1
ADC2	I	43	Analog-to-Digital Converter Interface 2

Remark:

1. When the module is not powered by VBAT, the ADC interface cannot directly connect any input voltage.
2. It is recommended to use a voltage divider circuit input for the ADC pin.
3. It is recommended that the ADC should be grounded during wiring, which can improve the accuracy of ADC voltage measurement.

3.13 USB_BOOT Interface

SLM310 supports USB_BOOT function . Customers can short- circuit USB_BOOT and VDD_EXT before

the module is turned on, and the module will enter the forced download mode when the module is turned on. In this mode, the module can be upgraded through the USB interface.

Table 20 USB_BOOT pin definition

Pin name	I/O	Pin	Describe
USB_BOOT	I	115	Short-circuit the USB_BOOT and VDD_EXT before the module is turned on, and the module will enter the forced download mode when the module is turned on.
VDD_EXT	PO	7	

4. Antenna Ports

The SLM310 module is designed with three antenna interfaces, and the impedance of the antenna interface is 50Ω.

Table 21 Antenna interface pin definition

Pin name	Pin number	Describe	I/O	Remark
ANT_MAIN	49	main antenna interface	IO	50Ω impedance
ANT_GNSS	47	GPS antenna interface	IO	50Ω impedance

4.1 Introduction of Antenna Interface

SLM310 global version provides three antenna pins : ANT_MAIN ,ANT_GNSS to improve the TDD-LTE/FDD-LTE , GNSS transceiver performance of the product.China /European version provides one antenna pins : ANT_MAIN.It is recommended that users use an antenna with an impedance of 50Ω that matches the RF connector on the module end.

Remark:

To ensure communication capability in all frequency bands, please connect all antennas .

It is recommended that the RF adapter cable be carefully selected on the application side. It is necessary to choose an RF patch cord with as little loss as possible. It is recommended to use RF patch cables with the following RF loss requirements:

- GSM850/900 <0.6dB;
- DCS1800/PCS1900 <1.0dB;
- TDD- LTE< 1.2dB;
- FDD-LTE < 1.2dB ;
- GNSS<1.0dB.

The RF Connectors are recommended:

Product name		MHF® I LK	MHF® I	MHF® I	MHF® III
Appearance					
		MHF I with mechanical lock	Best Insertion Loss	Most Cable O.D. options	low profile 1.60 mm
Plug part number		-	20767-001R	20278-112R-**	20609-002R
Receptacle part number		20279-001E-** (3 pads) 20441-001E-01 (4 pads)			20369-001E-**
Maximum height (mm)		2.9	3.0	2.5	1.6
Outside dimension of receptacle (mm)		3.0 x 3.0			2.0 x 2.0
Coax O.D. (Center Conductor AWG)	2.00 mm (26)		●		
	1.80 mm (30)	●		●	
	1.37 mm (30)	●		●	
	1.32 mm (32)	●		●	
	1.13 mm (32)	●		●	
	0.95 mm (33)				
	0.81 mm (33)				
	0.81 mm (36)	●		●	●
	0.64 mm (36)				●
	0.48 mm (38)				
Frequency		DC - 9 GHz			DC - 6 GHz
VSWR (L=100mm)	DC - 3GHz	1.3 max.(PLUG) /1.3 max.(RECE)			1.3 max.
	3GHz - 6GHz	1.5 max.(PLUG) /1.4 max.(RECE)			1.5 max.
	6GHz - 9GHz	1.9 max.(PLUG) /1.8 max.(RECE)		1.6 max.(PLUG) 1.8 max.(RECE)	-
	9GHz - 12GHz	-			
	12GHz - 15GHz	-			
Service temp. (Celsius)		-40 degree - 90 degree			
Characteristic impedance		50ohm			
Rated voltage		AC60V			
Contact resistance		20m ohm max.			
Withstand voltage		AC200V/min			
Insulation resistance		500M ohm min./DC100V			

Figure 18. The RF Connector

4.2 RF Reference Circuit

4.2.1 Antenna Connection Reference Design

The ANT_MAIN , ANT_GNSS antenna connection reference design circuit is shown in the figure below. In order to obtain better RF performance, the following four points should be paid attention to in schematic design and PCB layout:

1. Schematic design, a π-type matching circuit is reserved near the RF port of the module, and the capacitor is not pasted by default;
2. Schematic design, redundant RF connectors between the module RF port and the antenna are used for certification testing, and the RF connectors may not be attached after mass production and

delivery; (Reference: RF Connector-1P-H176);

3. Schematic design, a π-type matching circuit is reserved near the antenna end, and the capacitor is not pasted by default;

4. PCB layout, the wiring between the module RF port and the antenna is as short as possible, and the board factory needs to do 50Ω impedance control on the RF wiring.

4.2.2 RF Signal Line Layout

For the user PCB, the characteristic impedance of all the RF signal lines shall be controlled at 50 Ω. Generally, the impedance of the RF signal line is determined by the dielectric constant of the material, the wiring width (W), the ground gap (S), and the height (H) of the reference ground plane. The control of PCB property impedance usually adopts microband line and coplanar waveguide. To reflect the design principles, the following pictures show the structural design of the microstrip line and the coplanar waveguide when the impedance line controls the 50Ω waveguide.

W1: Maximum line width W2: minimum line width T1: copper thickness H1: plate medium thickness ERI: plate dielectric constant.

- Microband line complete structure

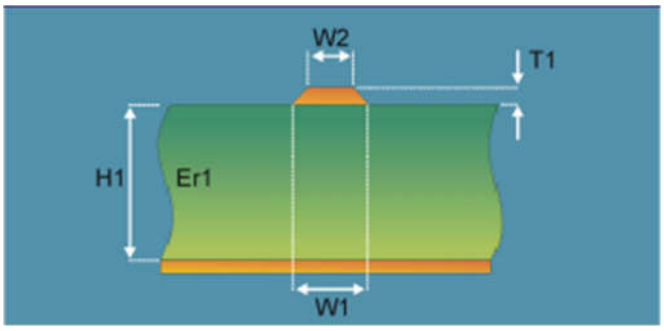

Figure 20 Microband line structure of two-layer PCB plates

- Complete structure of the coplanar waveguide

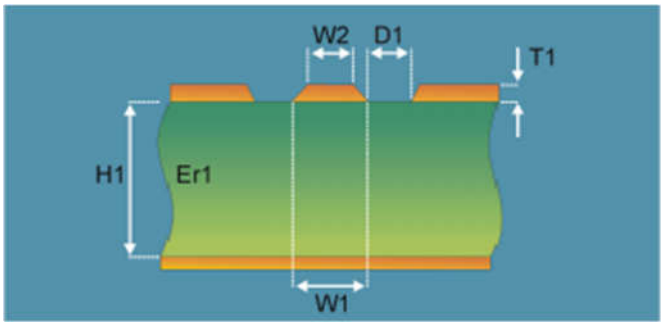

Figure 21 Co-planar waveguide structure of two-layer PCB plates

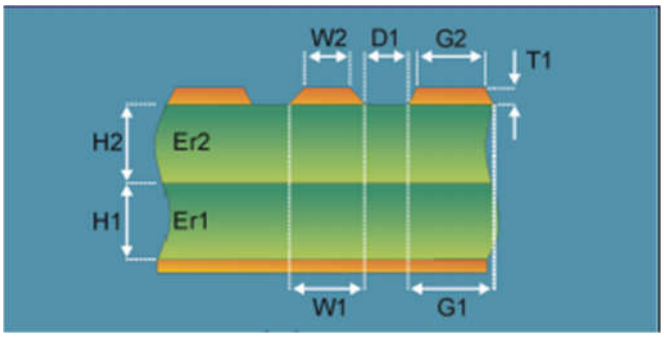

Figure 22 Multi-layer PCB board common-planar waveguide structure (reference for the third layer)

In the circuit design of RF antenna interface, the following design principles are recommended to ensure the good design and reliability of RF signal：

- Precise 50 Ω impedance control of the RF signal lines shall be performed using impedance simulation calculation tools.
- GND pins adjacent to RF pins do not make hot pads and make full contact with the ground.
- The distance between the RF pin and the RF connector should be as short as possible; also avoid a recommended alignment angle of 135.
- When the connection device package is established, the signal foot should keep a certain distance from the ground.
- The ground plane of the RF signal line reference shall be complete; adding a certain amount of ground holes around the signal line and the reference ground may help improve the RF performance; the distance between the ground hole and the signal line shall be at least 2 times the line width (2 W).
- RF signal lines must be away from interference sources and avoid crossing or parallel to any signal lines in adjacent layers.

4.3 Antenna installation

4.3.1 RF Receive Sensitivity

Table 24 SLM310 module RF receiving sensitivity

Frequency	Receiving Sensitivity (Typical BW) -10M			
	Main episode	Separation	Main episode + Diversity	3GPP (Main + Diversity)
GSM850	-106dBm	NA	NA	-102.4dBm
EGSM900	-106dBm	NA	NA	-102.4dBm
DCS1800	-106dBm	NA	NA	-102.4dBm
PCS1900	-106dBm	NA	NA	-102.4dBm
LTE-FDD B1	-97dBm	NA	NA	-96.3dBm
LTE-FDD B2	-97dBm	NA	NA	-94.3dBm
LTE-FDD B3	-97dBm	NA	NA	-93.3dBm
LTE-FDD B4	-97dBm	NA	NA	-96.3dBm
LTE-FDD B5	-97.5dBm	NA	NA	-94.3dBm
LTE-FDD B7	-97dBm	NA	NA	-94.3dBm
LTE-FDD B8	-98dBm	NA	NA	-93.3dBm
LTE-FDD B18	-97dBm	NA	NA	-96.3dBm
LTE-FDD B19	-97dBm	NA	NA	-96.3dBm
LTE-FDD B20	-98dBm	NA	NA	-93.3dBm
LTE-FDD B25	-97dBm	NA	NA	-92.8dBm
LTE-FDD B26	-97dBm	NA	NA	-93.8dBm
LTE-FDD B28	-98dBm	NA	NA	-94.8dBm
LTE-TDD B34	-97.5dBm	NA	NA	-96.3dBm

LTE-TDD B38	-97.5dBm	NA	NA	-96.3dBm
LTE-TDD B39	-97.5dBm	NA	NA	-96.3dBm
LTE-TDD B40	-97.5dBm	NA	NA	-96.3dBm
LTE-TDD B41	-97dBm	NA	NA	-94.3dBm

Remark:

Information on other sub-models and frequency bands will be reflected in subsequent editions of the document.

4.3.2 Operating Frequency

Table 25 SLM310 operating frequency

3GPP frequency band	Send	Take over	Unit
GSM850	824~849	869~894	MHz
EGSM900	880~915	925~960	MHz
DCS1800	1710~1785	1805~1880	MHz
PCS1900	1850~1910	1930~1990	MHz
LTE-FDD B1	1920~1980	2110~2170	MHz
LTE-FDD B2	1850~1910	1930~1990	MHz
LTE-FDD B3	1710~1785	1805~1880	MHz
LTE-FDD B4	1710~1755	2110~2155	MHz
LTE-FDD B5	824~849	869~894	MHz
LTE-FDD B7	2500~2570	2620~2690	MHz
LTE-FDD B8	880~915	925~960	MHz
LTE-FDD B18	815~830	860~875	MHz
LTE-FDD B19	830~845	875~890	MHz
LTE-FDD B20	832~862	791~821	MHz
LTE-FDD B25	1850~1915	1930~1995	MHz
LTE-FDD B26	814~849	859~894	MHz
LTE-FDD B28	703~748	758~803	MHz
LTE-TDD B34	2010~2025	2010~2025	MHz
LTE-TDD B38	2570~2620	2570~2620	MHz
LTE-TDD B39	1880~1920	1880~1920	MHz
LTE-TDD B40	2300~2400	2300~2400	MHz
LTE-TDD B41	2496~2690	2496~2690	MHz
GPS	/	1575.42±1	MHZ
BDS	/	1559~1563	MHZ
Glonass	/	1597~1606	MHZ

Galileo	/	1575.42	MHZ

4.3.3 OTA Antenna Requirements

Table 26 Antenna index requirements

Network Mode	Band	VSWR	Gain		Effi.	SAR	TRP (dBm)	TIS (dBm)
			Peak	Avg.				
GSM	850	<2.5:1	>0dBi	>-4dBi	>40%	<1.6W/Kg	26	<-102
	900						26	<-102
	1800(DCS)						26	<-102
	1900(PCS)						26	<-102
TDD-LTE	Band34						19	<-94
	Band38						19	<-94
	Band39						19	<-94
	Band40						19	<-94
	Band41						19	<-94
FDD-LTE	Band1						19	<-94
	Band2						19	<-94
	Band3						19	<-94
	Band4						19	<-94
	Band5						19	<-94
	Band7						19	<-94
	Band8						19	<-94
	Band18						19	<-94
	Band19						19	<-94
	Band20						19	<-94
	Band25						19	<-94
	Band26						19	<-94
	Band28						19	<-94

5. Electrical Characteristics

5.1 Limited Voltage Range

The limit voltage range refers to the module power supply voltage and the maximum voltage range that the digital and analog input/output interfaces can withstand. Working outside this range may result in damage to the product.

The limit voltage range of SLM310 is shown in the table below.

Table 27 The limit working voltage range of the module

Parameter	Describe	Minimum	Typical value	Maximum value	Unit
VBAT	powered by	-0.3	3.8	5.5	V
GPIO	Level supply voltage for digital I/O	-0.3	1.8	2.0	V
VBUS	USB insertion detection	-0.3	5.0	5.5	V

5.2 Ambient Temperature Range

SLM310 module is recommended to work in the environment of -30~+75 ℃ . It is recommended that the application side consider temperature control measures under harsh environmental conditions. At the same time, the extended operating temperature range of the module is provided. When used under extended temperature, the function is normal, but some RF indicators may deteriorate. At the same time, it is recommended that the module application terminal be stored under certain temperature conditions. Modules beyond this range may not work properly or may be damaged.

Table 28 Module temperature range

parameter	minimum	Typical value	maximum value	unit
Operating temperature	-30	+25	+75	° C
Storage temperature	-4 0		+ 90	° C

5.3 ESD Characteristics

The module is not specifically protected against electrostatic discharge. Therefore, users must pay attention to electrostatic protection when producing, assembling and operating modules.

6. Mechanical Characteristics

This chapter describes the mechanical dimensions of the module, all dimensions are in millimeters, and all dimensions without tolerances are ±0.05mm.

6.1 Module Mechanical Dimensions

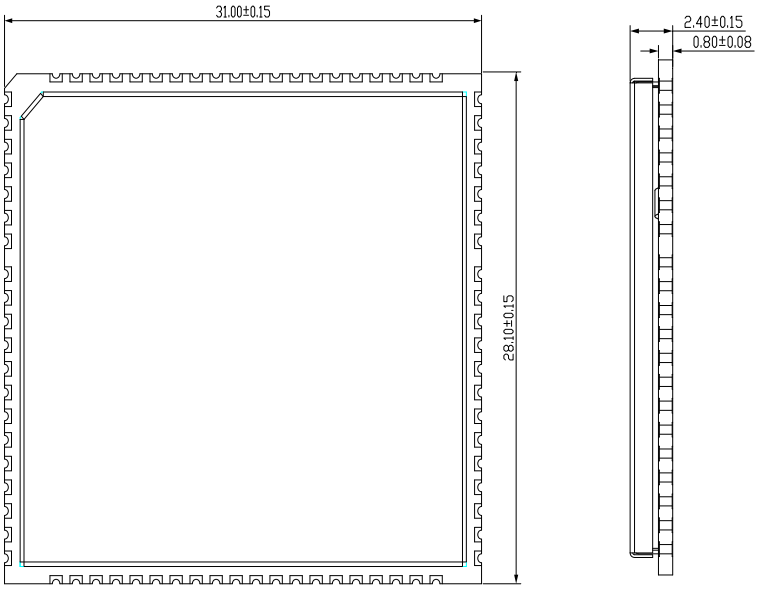

Figure 23 Top view and side view dimension drawing (unit: mm)

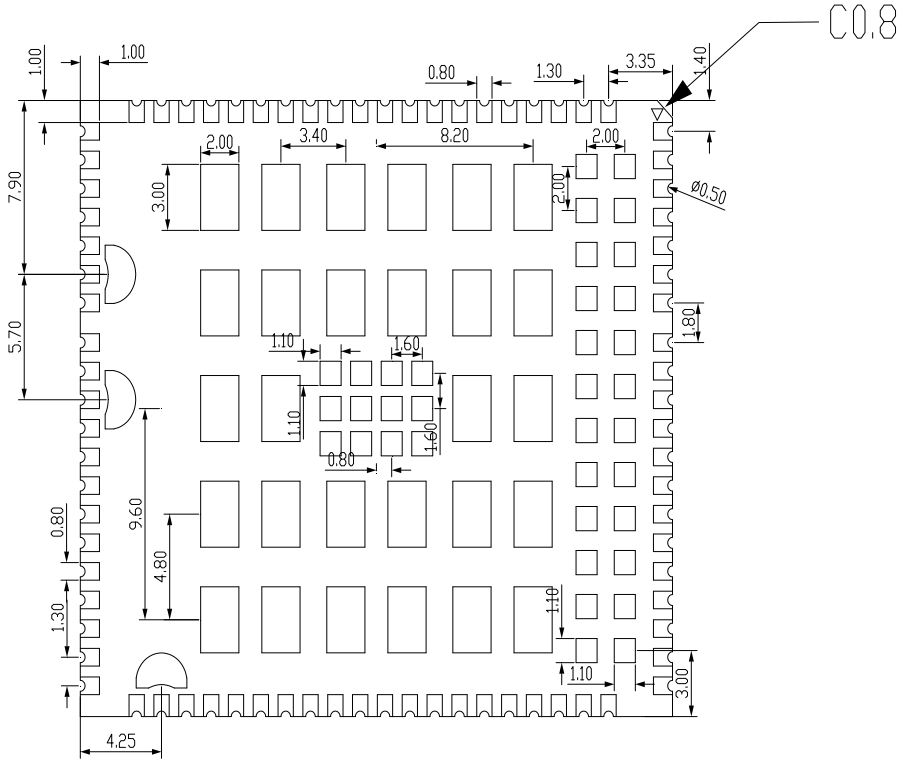

Figure 24 Bottom view dimension drawing (unit: mm)

6.2 Recommended Package

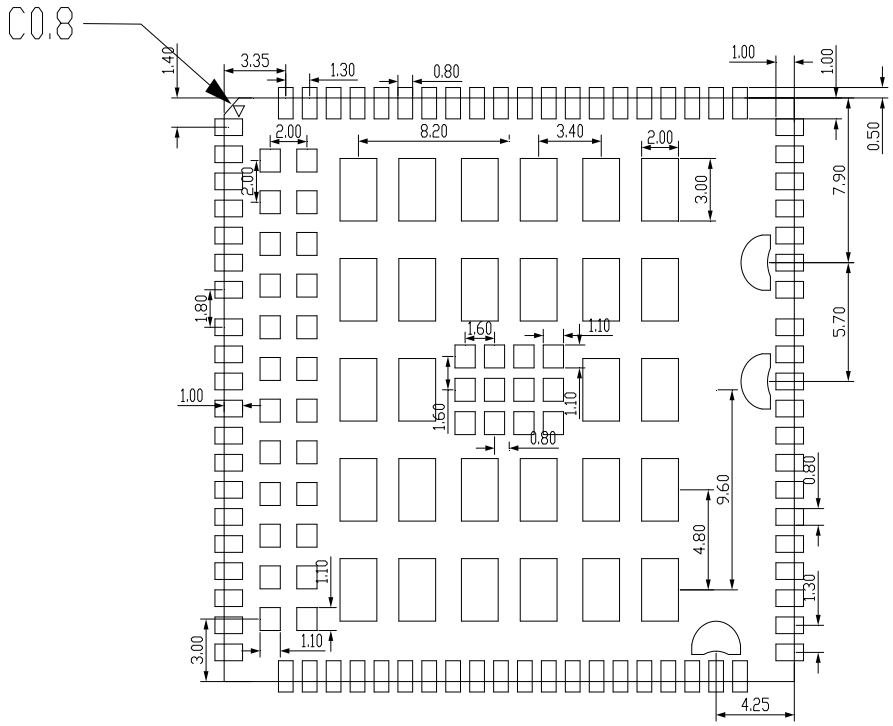

Figure 25 Recommended package (top view) (unit: mm)

6.3 Module Top View

Figure 26 Module top view

6.4 Module Bottom View

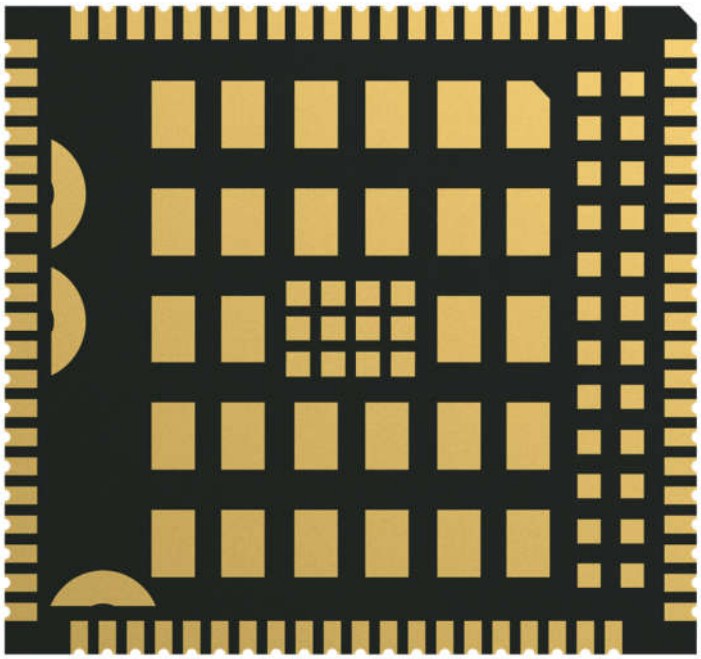

Figure 27 Bottom view of the module

7. Storage and Production

The SLM310 ships in a vacuum-sealed bag. The storage of modules must comply with the following conditions:

1. When the ambient temperature is lower than 40 degrees Celsius and the air humidity is lower than 90%, the module can be stored in a vacuum-sealed bag for 24 months;
2. After the vacuum-sealed bag is opened, the module can be directly reflowed or other high-temperature processes if the following conditions are met:
   - Module storage air humidity is less than 10%;
   - The ambient temperature of the module is lower than 30 degrees Celsius, the air humidity is less than 60%, and the factory can complete the patch within 72 hours.
3. If the module is under the following conditions, it needs to be baked before placement:
   - When the ambient temperature is 23 degrees Celsius (the fluctuation of 5 degrees Celsius is allowed), the humidity displayed by the humidity indicator card is greater than 10%;
   - When the vacuum seal bag is opened, the ambient temperature of the module is lower than 30 degrees Celsius, and the air humidity is less than 60%, but the factory failed to complete the patch within 168 hours;
   - When the vacuum-sealed bag is opened, the module storage air humidity is greater than 10%.
4. bake it for 8 hours at 125°C (allow 5°C fluctuations up and down).

MeiG Smart Technology Co., Ltd.

2nd Floor,Office Building,No.5 Lingxia Road,Fenghuang,Fuyong Street,Bao'an District,Shenzhen City.

Tel : 0755-83213556

Website: www.meigchina.com