USER MANUAL

Version 2.0 June 2021

M276 & M278

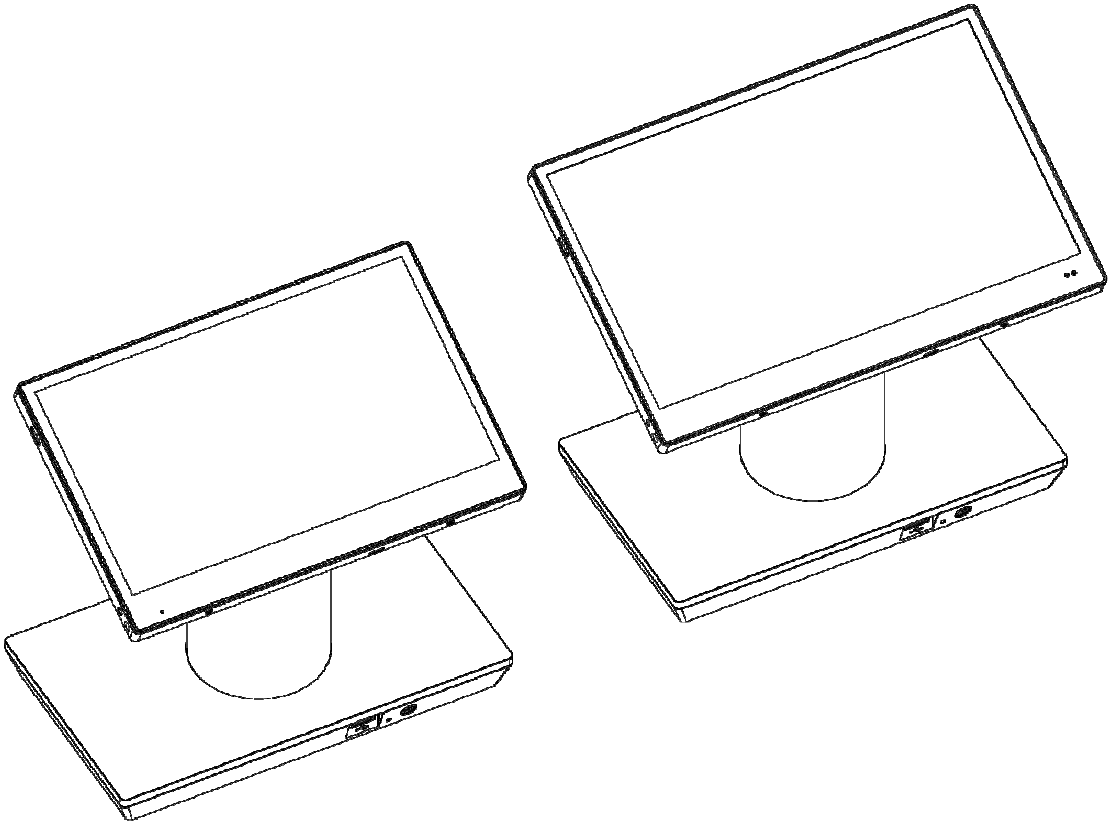

Copyright

Copyright 2021
All Rights Reserved
Manual Version 2.0

The information contained in this document is subject to change without notice.
We make no warranty of any kind with regard to this material, including, but not limited to, the implied warranties of merchantability and fitness for a particular purpose. We shall not be liable for errors contained herein or for incidental or consequential damages in connection with the furnishing, performance, or use of this material.

This document contains proprietary information that is protected by copyright. All rights are reserved. No part of this document may be photocopied, reproduced or translated to another language without the prior written consent of the manufacturer.

TRADEMARK

The material in this manual is subject to change without notice.
Bluetooth is a registered trademark of Bluetooth SIG.
Microsoft®, Windows® and ActiveSync® are either registered trademarks or trademarks of Microsoft Corporation.
All other product or service names are the property of their respective owners.

Safety

Regulatory Information

Caution: Only use approved and UL Listed accessories, battery packs and battery chargers. Do NOT attempt to charge damp/wet mobile computers or batteries. All components must be dry before connecting to an external power source.

Power Supply

Use only the approved power supply output rated 12 Vdc and minimum 3 A. The power supply is certified to EN60950-1 or EN62368-1 with SELV outputs. Use of alternative power supply will invalidate any approval given to this device and may be dangerous.

Warning for Use of Wireless Devices

Please observe all warning notices with regard to the usage of wireless devices.

Potentially Hazardous Atmospheres

You are reminded of the need to observe restrictions on the use of radio devices in fuel depots, chemical plants etc. and areas where the air contains chemicals or particles (such as grain, dust, or metal powders)
and any other area where you would normally be advised to turn off your vehicle engine.

Safety in Aircraft

Switch off your wireless device whenever you are instructed to do so by airport or airline staff.

Pacemakers

Pacemaker manufacturers recommended that a minimum of 15cm (6 inches) be maintained between a handheld wireless device and a pacemaker to avoid potential interference with the pacemaker. These recommendations are consistent with independent research and recommendations by Wireless Technology Research.

Persons with Pacemakers

Persons with Pacemakers should ALWAYS keep the device more than 15cm (6 inches) from their pacemaker when turned ON and hence they should not carry the device in a breast pocket .
Should use the ear furthest from the pacemaker to minimize the potential for interference.
If you have any reason to suspect that interference is taking place, turn OFF your device.

Hearing Aids

The wireless device may interfere with some hearing aids. In the event of interference you may want to consult your hearing aid supplier to discuss solutions.

Other Medical Devices

Please consult your physician or the manufacturer of the medical device, to determine if the operation of your wireless product may interfere with the medical device.

FCC/EU RF Exposure Guidelines

FCC Statement

This equipment has been tested and found to comply with the limits for a Class B digital device, pursuant to part 15 of the FCC Rules. These limits are designed to provide reasonable protection against harmful interference in a residential installation. This equipment generates, uses and can radiate radio frequency energy and, if not installed and used in accordance with the instructions, may cause harmful interference to radio communications. However, there is no guarantee that interference will not occur in a particular installation. If this equipment does cause harmful interference to radio or television reception, which can be determined by turning the equipment off and on, the user is encouraged to try to correct the interference by one or more of the following measures:

- Reorient or relocate the receiving antenna.
- Increase the separation between the equipment and receiver.
- Connect the equipment into an outlet on a circuit different from that to which the receiver is connected.
- Consult the dealer or an experienced radio/TV technician for help.

This device complies with FCC SAR exposure limits set forth for an uncontrolled environment.

This device complies with Part 15 of the FCC Rules. Operation is subject to the following two conditions: (1) this device may not cause harmful interference, and (2) this device must accept any interference received, including interference that may cause undesired operation.

FCC RF Radiation Exposure Statement:

- This Transmitter must not be co-located or operating in conjunction with any other antenna or transmitter.
- For body worn operation, this device has been tested and meets FCC RF exposure guidelines. When used with an accessory that contains metal may not ensure compliance with FCC RF exposure guidelines.

Caution!

Any changes or modifications not expressly approved by the party responsible for compliance could void the user's authority to operate the equipment.

CE Marking and European Economic Area

The use of 2.4GHz WLAN's, for use through the EEA, have the following restrictions:

- Maximum radiated transmit power of 100 mW EIRP in the frequency range 2.400 -2.4835 GHz
- France, outside usage is restricted to 2.4 - 2.454 GHz.
- Italy requires a user license for outside usage.

For class 2 device (supporting WLAN 5GHz: 5150-5350 MHz)
The device is restricted to indoor use only when operating in the 5150 to 5350 MHz frequency range in the following countries:

	AT	BE	BG	HR	CY	CZ	DK
	EE	FI	FR	DE	EL	HU	IE
	IT	LV	LT	LU	MT	NL	PL
	PT	RO	SK	SI	ES	SE	UK

BLE® Wireless Technology for use through the EEA has the following restrictions:

- Maximum radiated transmit power of 100mW EIRP in the frequency range 2.400 -2.4835 GHz
- France, outside usage is restricted to 10mW EIRP
- Italy requires a user license for outside usage.

Battery Information

Our rechargeable battery packs are designed and constructed to the highest standards within the industry.
However, there are limitations to how long a battery can operate or be stored before needing replacement.
Many factors affect the actual life cycle of a battery pack, such as heat, cold, harsh environmental conditions and severe drops.
When batteries are stored over six (6) months, some irreversible deterioration in overall battery quality may occur. Store batteries discharged in a dry, cool place, removed from the equipment to prevent loss of capacity, rusting of metallic parts and electrolyte leakage. When storing batteries for one year or longer, they should be charged and discharged at least once a year. If an electrolyte leakage is observed, avoid any contact with affected area and properly dispose of the battery. Batteries must be charged within

the 32° to 95° F (0° to +35° C) ambient temperature range.
Replace the battery when a significant loss of run time is detected.

⚠ Battery Caution

Risk of explosion if battery is replaced by an incorrectly type.
Dispose of used battery according to the local disposal instructions.

Waste Electrical and Electronic Equipment (WEEE)

English: For EU Customers: All products at the end of their life must be returned to the reseller for recycling.

Notational Conventions

The following conventions are used in this document:

- Italics are used to highlight specific items in the general text, and to identify chapters and sections in this and related documents.
- bullets (•) indicate:
  - action items
  - lists of alternatives
  - lists of required steps that are not necessarily sequential
  - Sequential lists (e.g., those that describe step-by-step procedures) appear as numbered lists.

NOTE This symbol indicates something of special interest or importance to the reader. Failure to read the note will not result in physical harm to the reader, equipment or data.
CAUTION This symbol indicates that if this information is ignored, the possibility of data or material damage may occur.
WARNING! This symbol indicates that if this information is ignored the possibility that serious personal injury may occur.

Revision History

Version	Date	Description
1.0	April 2021	Initial release
2.0	June 2021	● Add FCC RF Radiation Exposure Statement ● Specification update

Table of Contents

1 Item Checklist 9

1-1 Standard Items 9
1-2 Optional Items 10

2 System View 11

2-1 Front View 11
2-2 Rear View 12
2-3 Specification 13

3 Getting Started 15

3-1 Power On/Off the System 15
3-2 Installing the Peripheral Kits 15
3-3 Using the Premium Docking Station 16
3-4 Attaching the Shoulder Strap 18

4 Configuration 19

4-1 COM Port Power 19
4-2 Cash Drawer COM Port 20
4-3 USB over IP 21

1 Item Checklist

1-1 Standard Items

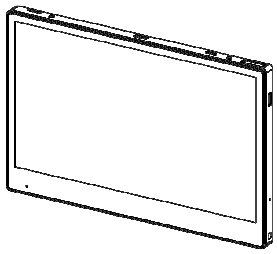	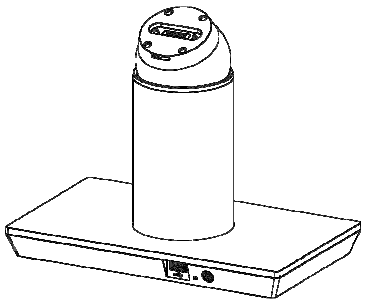
a. Tablet (11.6" or 13.3")	b. Premium docking station
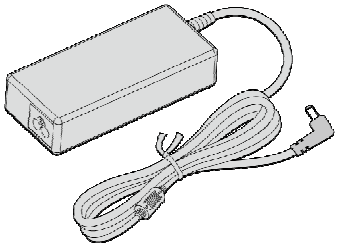	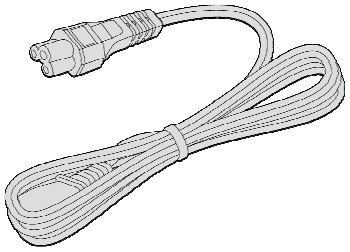
c. 19V/120W power adapter (standard, for premium docking station)	d. Power cord
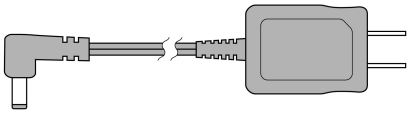	
e. 12V/36W power adapter (optional, for tablet only)	

1-2 Optional Items

	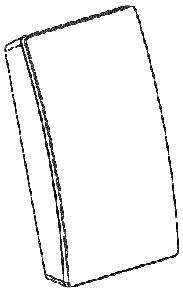
a. MSR	b. RFID
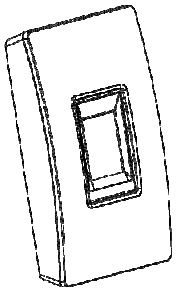	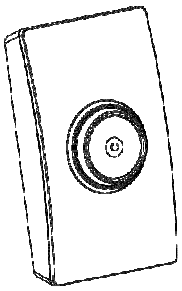
c. Fingerprint	d. iButton
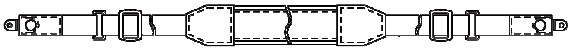	
e. Shoulder strap	

2 System View

2-1 Front View

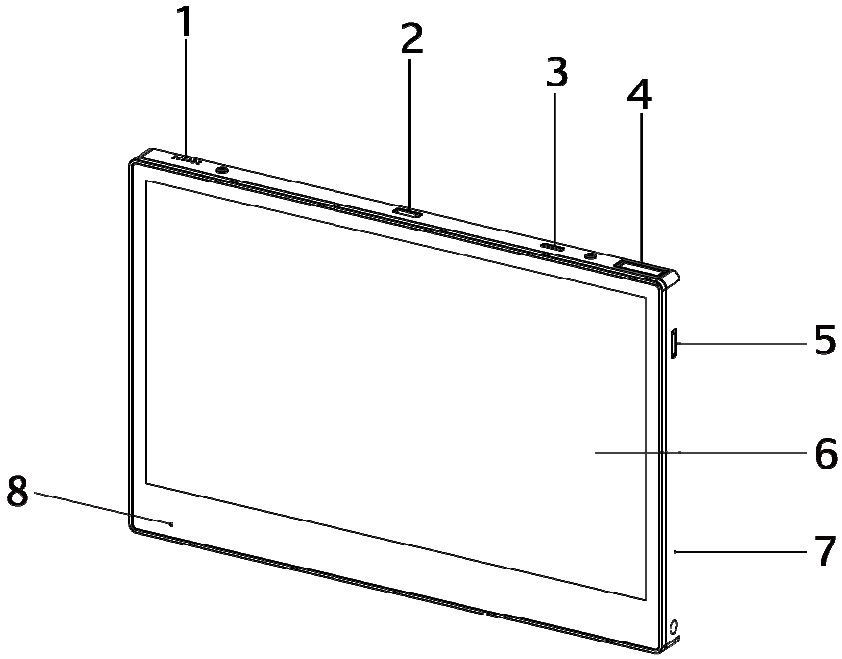

No.	Description
1	Speaker
2	Trigger key (middle)
3	Power On/Off
4	2D scanner
5	Trigger key (right)
6	Full HD P-CAP multi-touch screen
7	Mic
8	Battery status indicator

2-2 Rear View

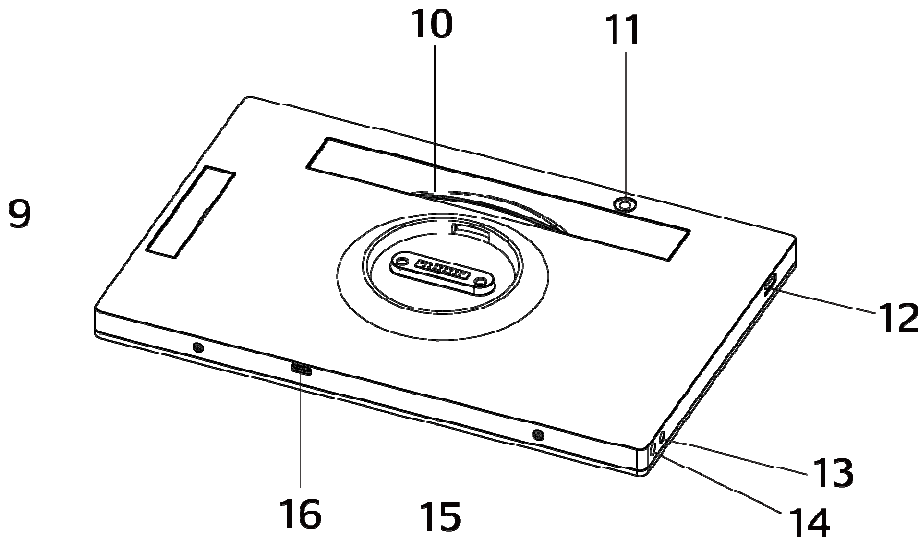

No.	Description
9	MSR/RFID/Fingerprint/iButton dummy cover
10	Hand strap
11	5MP AF camera
12	Trigger key (left)
13	DC-in
14	Should strap screw
15	Docking connector
16	USB type C

2-3 Specification

System	M276		M278		
Motherboard	**F63**	**F12**	**F63**		**F12**
CPU	Whiskey Lake Celeron 4305U	SNM758L-3308 (SnapDragon450)	Whiskey Lake Celeron 4305U	Whiskey Lake Core i3-8145U	SNM758L-3308 (SnapDragon450
System memory	DDR4 4GB	LPDDR3 3GB	DDR4 4GB	DDR4 8GB	LPDDR3 3GB
Flash memory	128G eMMC	32G eMMC	128G eMMC		32G eMMC
LCD Touch Panel					
LCD size	11.6"		13.3"		
Brightness	250 nits				
Resolution	1920*1080				
Wireless Networking					
Wireless LAN + BLE	802.11 a/b/g/n/ac 2.4G/5GHz, BLE*				
Expansion I/O Ports					
USB type-C	1 (data transfer only)				
Mic	1				
DC	1				
POGO I/O port	16 Pin POGO				
2D scanner	1 (Option : Honeywell 3601)				
Extension Port					
Kits：MSR / iButton / Fingerprint / RFID (either one)	1				
Full I/O Stand (Optional)					
I/O ports	**Full Function**		**Full Function**		
	Front USB2.0 x 1 (Type A) **Rear** COM(RS232, 0V/5V/12V) x 2 LAN(RJ-45) x 1 USB2.0 x 0 (Type A) USB3.0 x 2 (Type A) Type C x 1 (data only 3.0) PUSB 24V x 1 PUSB 12V x 1 Cash drawer x 1		**Front** USB2.0 x 1 (Type A) **Rear** COM(RS232, 0V/5V/12V) x 2 LAN(RJ-45) x 1 USB2.0 x 0 (Type A) USB3.0 x 2 (Type A) Type C x 1 (data only 3.0) PUSB 24V x 1 PUSB 12V x 1 Cash drawer x 1		
	Normal		**Normal**		
	Front USB2.0 x 1 (Type A) **Rear** COM(RS232, 0V/5V/12V) x 2 LAN(RJ-45) x 1 USB2.0 x 2 (Type A) USB3.0 x 0 (Type A) Type C x 1 (data only 2.0) PUSB 24V x 1 PUSB 12V x 1 Cash drawer x 1		**Front** USB2.0 x 1 (Type A) **Rear** COM(RS232, 0V/5V/12V) x 2 LAN(RJ-45) x 1 USB2.0 x 2 (Type A) USB3.0 x 0 (Type A) Type C x 1 (data only 2.0) PUSB 24V x 1 PUSB 12V x 1 Cash drawer x 1		

System	M276		M278	
Motherboard	**F63**	**F12**	**F63**	**F12**
Audio				
Speaker	1x 1W			
Control / Indicator				
Sensor	G-sensor			
LED indicator	1			
Camera (Optional)				
Rear camera	5MP			
Battery & Power				
Battery	7268mAh, 3.85V (Max. Charging Power=27.98Wh)			
Hot swap battery	N/A			
Power adapter	Tablet only - 12V/36W			
Peripherals				
Hand strap	1			
Certificate				
EMC & Safety	FCC Class B, CE Mark Class B, LVD, RF			
Environment				
Operating temperature (none charging mode)	0°C ~ 40°C (32°F ~104 °F)			
Operating temperature (charging mode)	0°C ~ 35°C (32 °F ~ +95 °F)			
Storage temperature	-10°C ~ 45°C (14°F ~ 114°F)			
Humidity	20% - 80% RH non-condensing			
Size				
Dimension	276 x 179 x 15.4 mm		312.5 x 200 x 15.4 mm	
Weight	800g		980g	
OS Support				
Windows	Windows10_2019X64	N/A	Windows10_2019X64	N/A
Android	N/A	9	N/A	9

*Note: Disable DSS function

3 Getting Started

3-1 Power On/Off the System

Press the power button for 2 seconds to turn on the system and press it for 6 seconds to turn off the system.

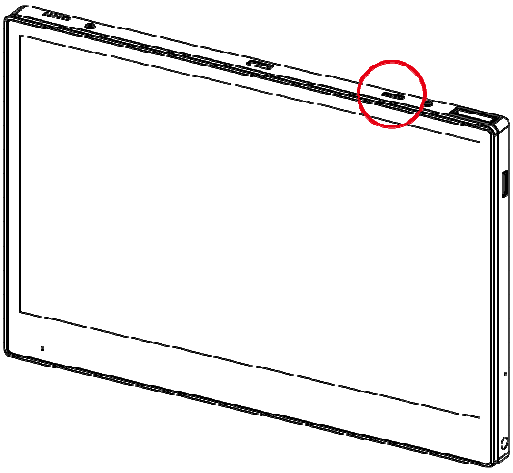

***Note*:** For best touch performance, remove the protective plastic overlay from the touch screen by peeling it away from one of the corners. Be sure to use a soft pointing device or finger tip to avoid scratching the screen during normal use.

3-2 Installing the Peripheral Kits

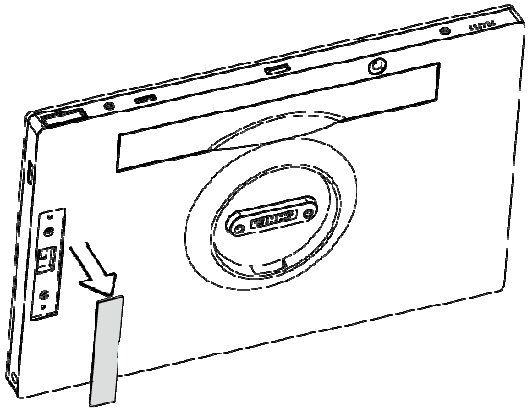

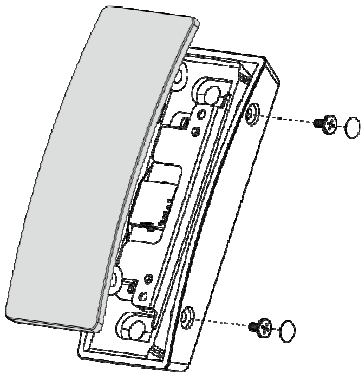

1. Remove the dummy cover first. Remove the rubber pads (x2) and screws (x2)to release the top cover of the MSR module.

2. Connect the cable to the connector on the system side. Then position the MSR module over the system as shown and fasten with the screws (x2). Finally place the top cover of the MSR module back.

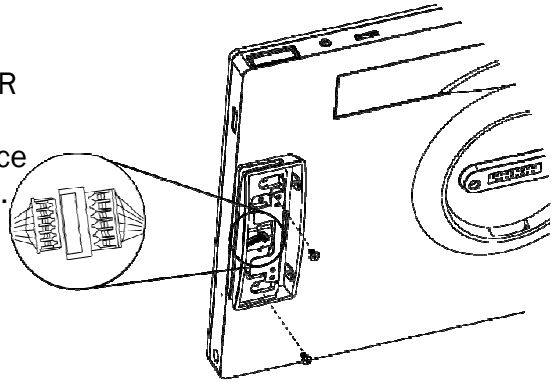

NOTE: The variety of peripheral kits like RFID/Fingerprint and iButton all follow the same installation method.

3-3 Using the Premium Docking Station

The premium docking station provides additional connectors and interfaces to support other devices and is also designed to allow the tablet to charge its battery via the dock.

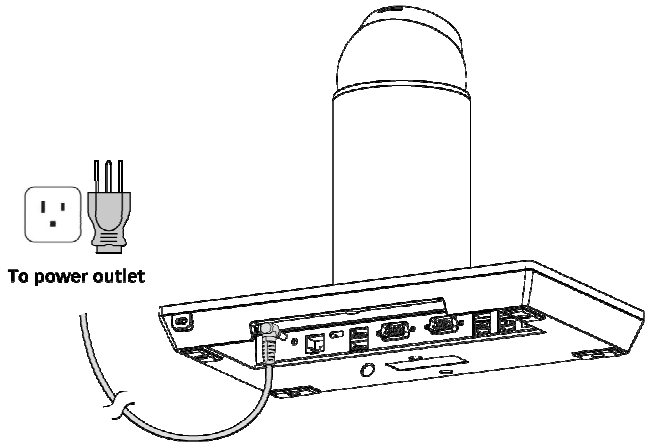

To use the premium docking station, firstly connect the AC adapter to the DC-in input and connect the other end to the power outlet. Always plug in the AC adapter first to enable the locking/unlocking function.

⚠The power cord of power adapter should be connected to a socket-outlet with earthing connection.

* You can also charge the battery via the **optional** 36W power adapter. Plug in the AC adapter cable directly into the connector located on the bottom right of the tablet. Then plug the other end to the AC outlet.

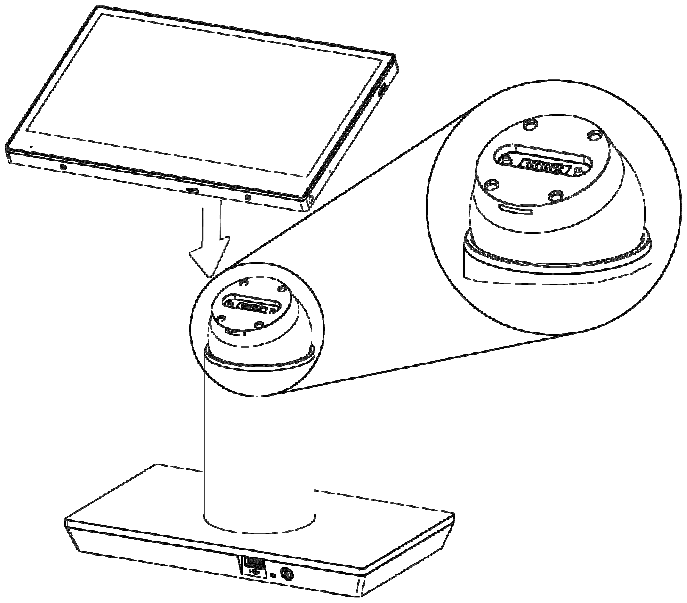

- **Attaching the tablet to the dock**

  After plugging in the AC adapter to the power outlet, align the rear of the tablet with the top of the docking station, and place the tablet onto the dock. The tablet automatically locks to the dock when attached.

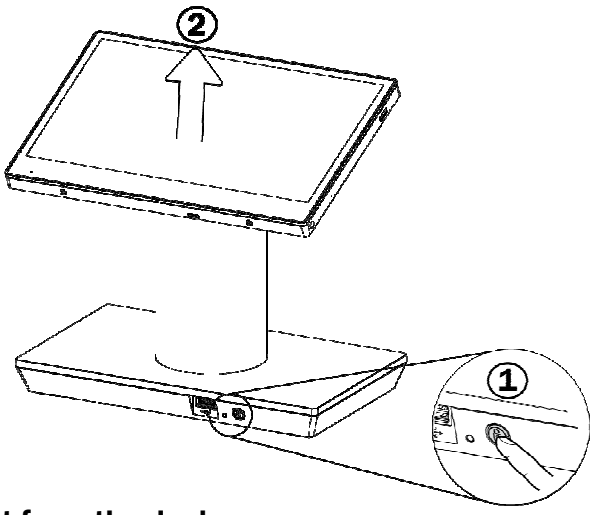

- **Removing the tablet from the dock**

  Press the lock release button on the front of the docking station, and then lift the tablet off the dock.

NOTE: The tablet will be locked again if it is not removed from the dock after pressing the release button in 10 seconds.

The light on the dock's lock release button indicates the locking status:
Blue - The tablet is locked
Green - The tablet is unlocked and can be removed.

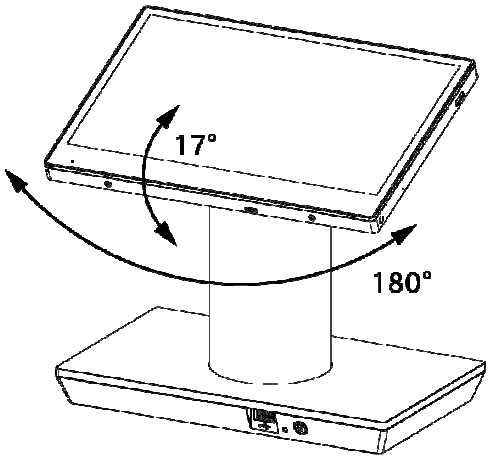

- **Adjusting the tablet angle**

  The premium docking station offers adjustment of viewing angle. You can tilt and swivel the tablet to set it to angle you preferred. The tilt angle can be set between 0° and 17° and the swivel angle can be set to 180° in either direction.

3-4 Attaching the Shoulder Strap

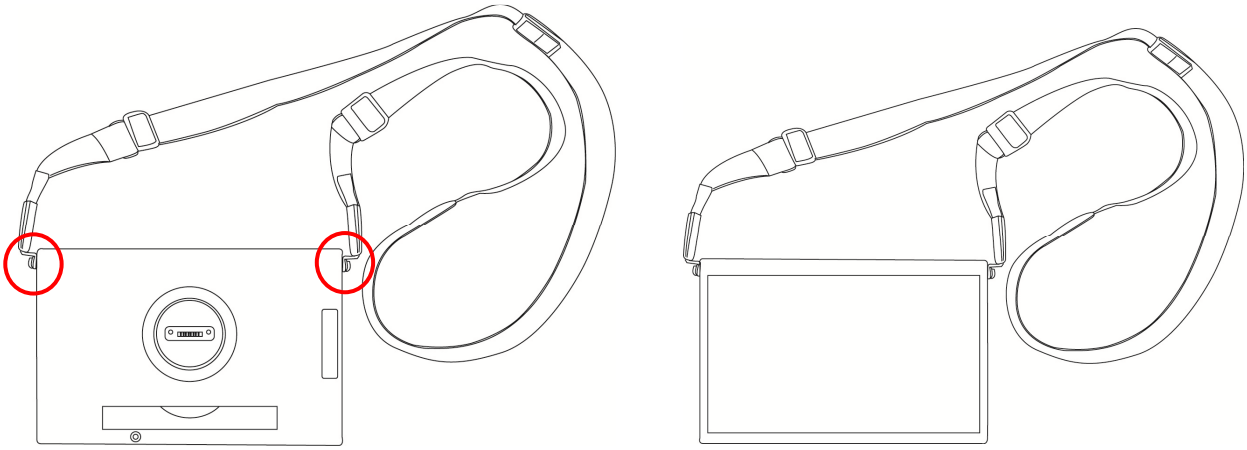

Align and attach the shoulder strap to the tablet as shown and fasten the screws (x2) to secure it.

4 Configuration

4-1 COM Port Power

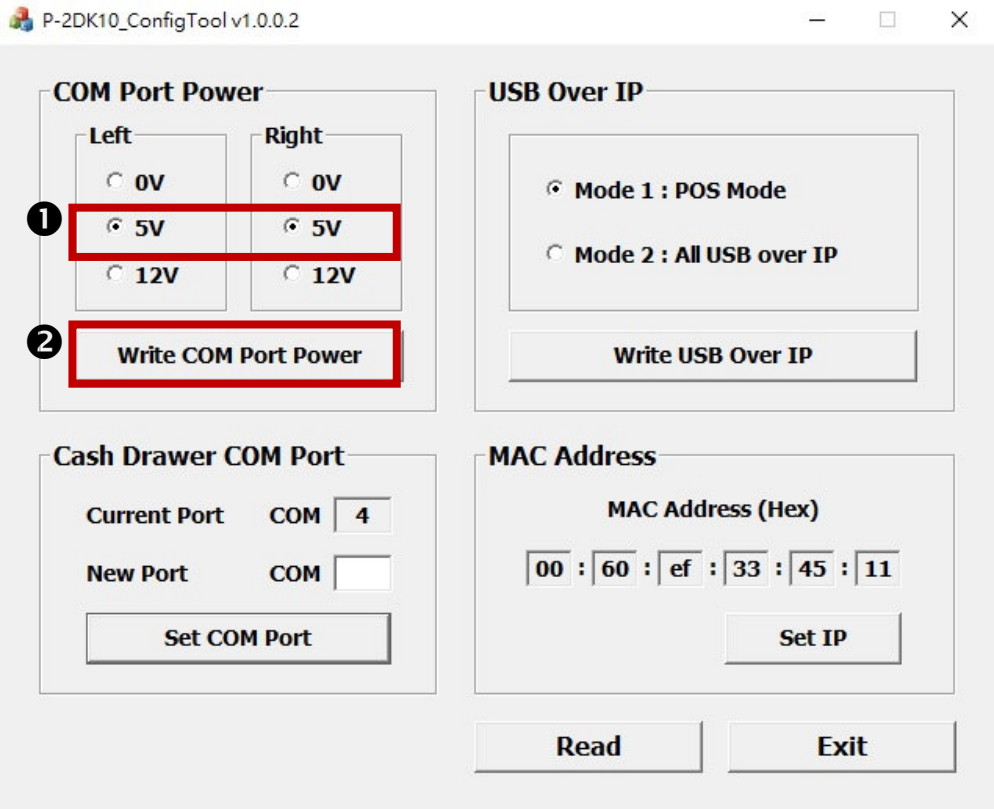

1. Double click **P-2DK10_ConfigTool.exe** to run the setup tool.
2. By default, both left and right COM port power are 0V. To change the default COM port power, select power and tap on **Write COM Port Power** to confirm.

** L/R COM port power can be set to different voltage individually, e.g., L:5V and R:12V.*

4-2 Cash Drawer COM Port

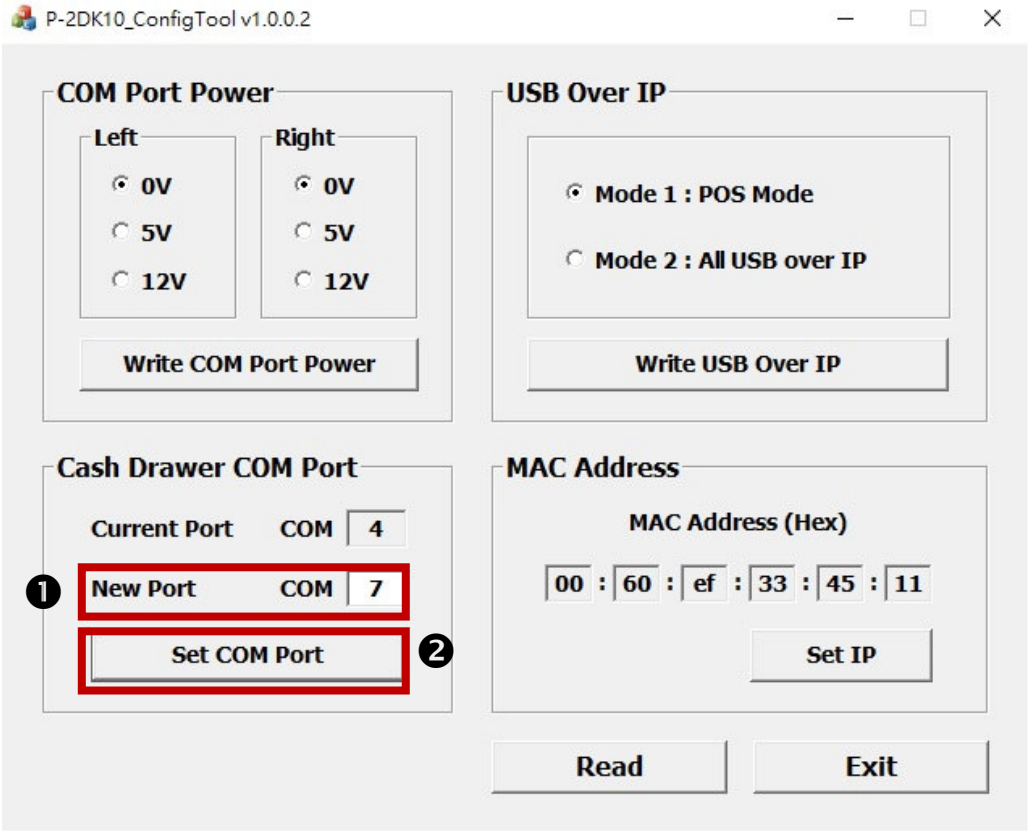

1. Click on **New Port COM** and enter 7 in the column.
2. Tap on **Set COM Port** to confirm.

3. Double click **P-2DK10_ConfigTool.exe** to run the setup tool.
4. By default, both left and right COM port power are 0V. To change the default COM port power, select power and tap on **Write COM Port Power** to confirm.

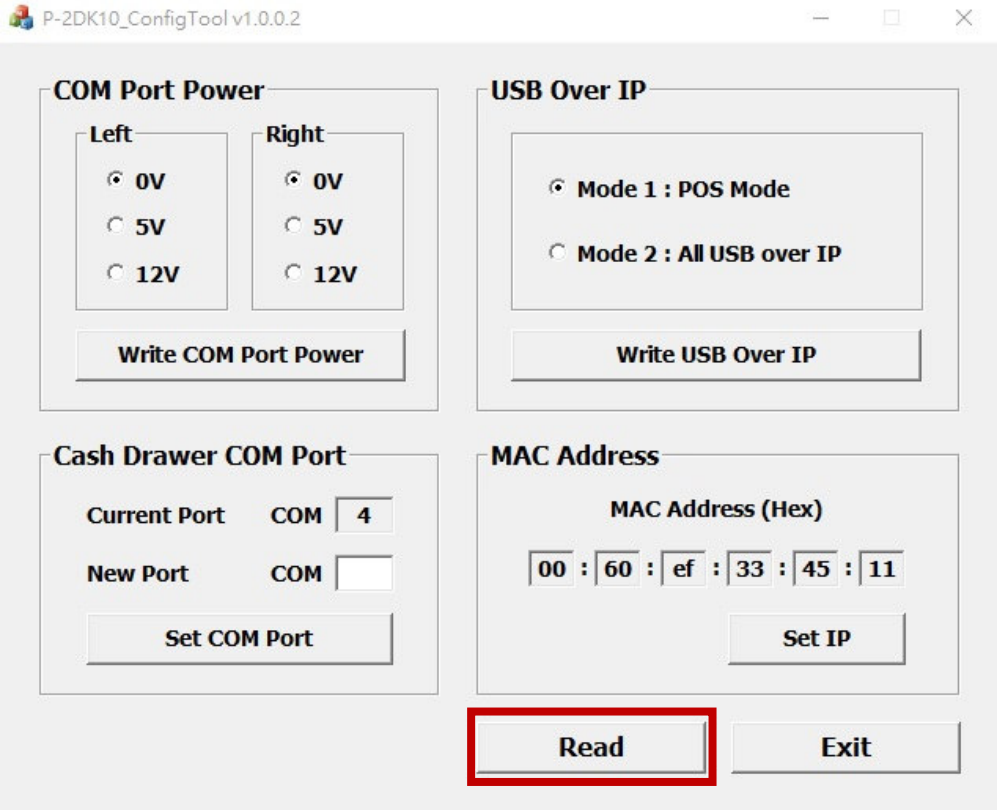

5. You can check the current setup condition by tapping on **Read**.

** If the device is not connected or the setup process hasn't been completed yet, the **Read / Write** column will be highlighted.*

4-3 USB over IP

- The **Premium Docking Station P-2DK10** is designed with the feature of USB over IP that offers a convenient way to extend and share a USB device over long distance, and it also works with multiple tablet-dock pairs.
- When the tablet docks on the premium docking station P-2DK10, it is connected via LAN and will be automatically switched to WLAN while releasing from the docking station.
- Prior to installing the USB client software, ensure that the WLAN is on the same network.

1. In the **VirtualHere** folder, double click **Install.bat** to install the software. Once it is completely installed, the program will launch automatically after you log into the computer.

** To remove the software, double click Uninstall.bat*

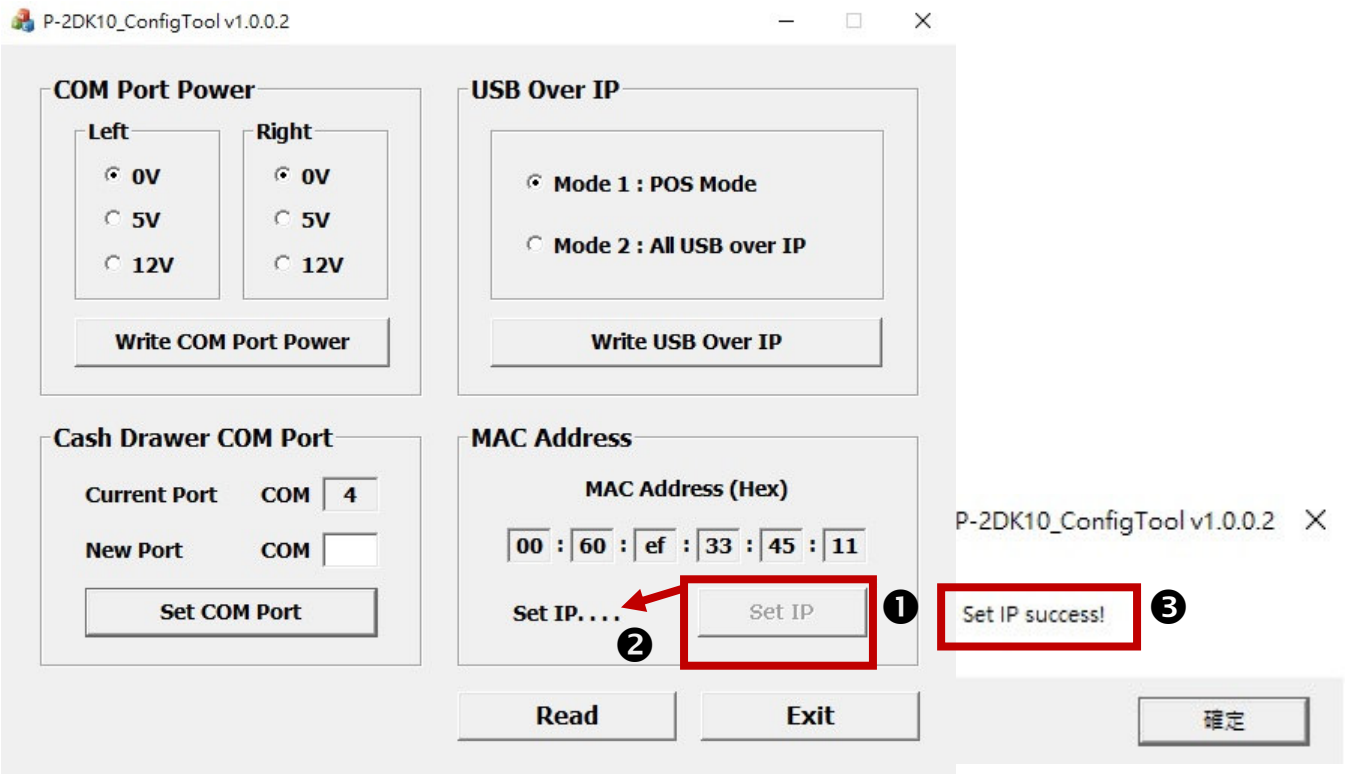

2. Double click **P-2DK10_ConfigTool.exe** to run the setup tool.
3. Specify the MAC address of the server in your **VirtualHere** by clicking on **Setp IP**. The process may take up to 2~3 minutes showing the message **Set IP....**If all was done correctly, a popup window should appear indicating **Set IP success!**

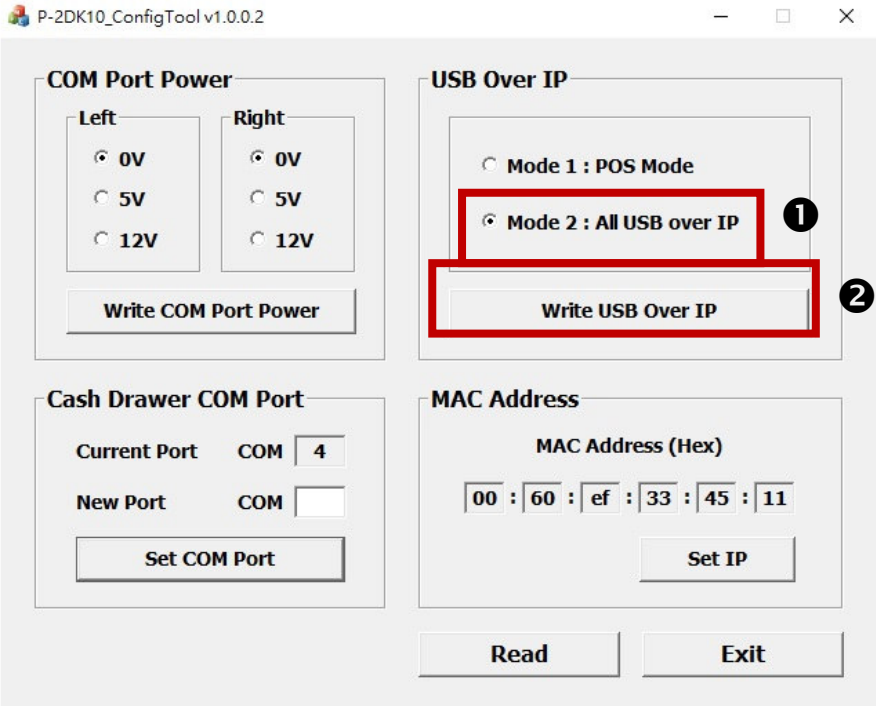

4. The default setting of the system is Mode 1: POS Mode. To change the default mode, select Mode 2: All USB over IP and tap on **Write USB over IP**.
5. Restart your computer to confirm changes.

**Always dock your tablet on the premium docking station before changing the Mode.*
*** USB over IP Mode is not recommended for the use of mass storage devices.*