1. General

RF1276T series is a low cost, ultra-low power, high performance transparent two way semi-duplex LoRa modulation transceiver with operation at 915Mhz ISM band. It integrates with high speed MCU from ST and high performance RF IC SX1276. Adopting high efficiency forward error correction with interleaving encoding (FEC) technology, it makes anti-interference ability and reception sensitivity greatly improved. That guarantees good performance in the harsh environment such as some industrial application. The FEC technology is advanced and unique in radio data communication field.

RF1276T has the UART interface, that make it is easy to implement wireless data transmission. It is flexible for users to set the baud rate, frequency, output power, air data rate etc parameters. It can transmit transparent data with large data buffer and also can provide over 26 channels. The compact size makes it an ideal option for radio data communication application.

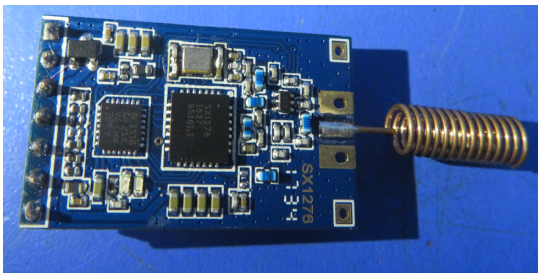

2. Features

- Air data rate: 300 - 19200bps, can be configured through RF tool
- UART data rate: 1200 - 57600bps, can be configured through RF tool
- Frequency: 902.5MHz – 927.5MHz
- Working Current: 90mA(TX), 19.2mA(RX), 22uA(wake-up), 3.9uA(Sleeping)
- 26 channels
- parity of series COM: 8E1/8N1/8O1
- LoRa modulation
- Receive sensitivity: -148dBm(@600bps)
- UART/TTL
- Exceed 256 bytes data buffer
- Supply Voltage: 3.3V – 5.5V
- Simply tool for configuration
- Dimension: 34.2mm x 18.4mm x 7.0mm

3. Application:

- Automated Meter Reading (AMR)
- Remote control, remote measurement system
- Access control
- Data collection
- Identification system
- IT household appliance
- Wireless alarm system

4. Maximum specification

Symbol	Parameter	Min	Max	Units
VCC	Supply Voltage	3.3	5.5	V
TOT	Operation Temperature	-30	85	℃
HOH	Operation Humidity	10%	90%	
TST	Storage Temperature	-55	125	℃

5. Pin Out:

RF1276T module has 7 pins. Refers to the Table 1：

RF1276T			
Pin NO.	Pin Name	Function	Description
1	GND	Ground	Grounding of Power Supply
2	VCC	Power	Power supply DC 3.3V-5.5V
3	EN	Input	Enable pin, Low effective
4	RXD	Input	RXD: UART input, TTL level
5	TXD	Output	TXD: UART output, TTL level
6	AUX	Output	Data indication pin for waking up module
7	SET	Input	Control pin, effective in central/node mode

Table 1: Pin definition

6. Working mode

a. Standard mode

Standard mode is also called transparent mode in which the module receives from or sends data to the host through serial port (RS232 or RS485) at preset data format and users don't need to care about the proce ss of data inside the module. The AUX pin of RF1276T will give indication about the data IN/OUT of serial port 2ms in advance in order to wake up the host.

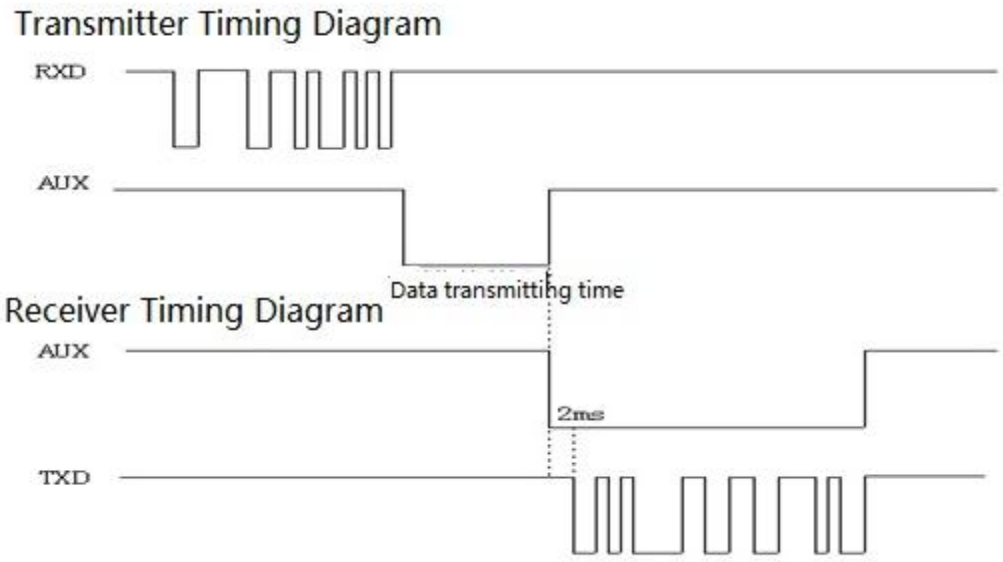

Timing Sequence in Standard Mode

b. Star network mode

In this mode one RF1276T module needs to set as the central module and other modules should be node modules. For central module, it works at the full performance so its power consumption is the same as in the standard mode. As to node module, some functions of it are closed. If the EN pin is connected to logic high, the node module only keeps CAD wireless monitor to detect if there is any wireless signal coming and will not check if there is any data from the host through UART interface. If the node module sends data to the central module, the host needs to set EN pin to low to activate the node module and then transfers the data.

In the configuration tool, there is an option for Node ID which is used to set the ID of node module. If the ID of the node modules is 0x00 0x00, the node module will not make address detection. In other words all of the nodes will receive the data including address from central module. The data package of the first two bytes should be the node ID.

E.g. The Central module sends data‘0x00 0x01 0x22 0x33 0x44 0x55’, all of the node modules with ID ‘0x00 0x00’ will receive the data ‘0x00 0x01 0x22 0x33 0x44 0x55’. If the ID of node module is larger than 0x00 0x00, the node module with ID the same as the one in the first two bytes of data package can receive the real data.

E.g. The Central module sends data ‘0x00 0x01 0x22 0x33 0x44 0x55’, the module with ID ‘0x00 0x01’ can get the data ‘0x22 0x33 0x44 0x55’and the first two byte ID will be filtered.
In order to guarantee the reliability of communication, the length of data package should not exceed 64 bytes.

c. Relay module

RF1276T can act reply module when the peer to peer communication range is not enough. The Relay module has the same hardware with RF1276T module, but Relay module has the different firmware. The Relay module has two network IDs. One network ID is the same as the Central module. Another one is the same as the Node module. Relay module acts as transfering the data from the Central or Node. In the below chart, it is shown the Relay in the network.

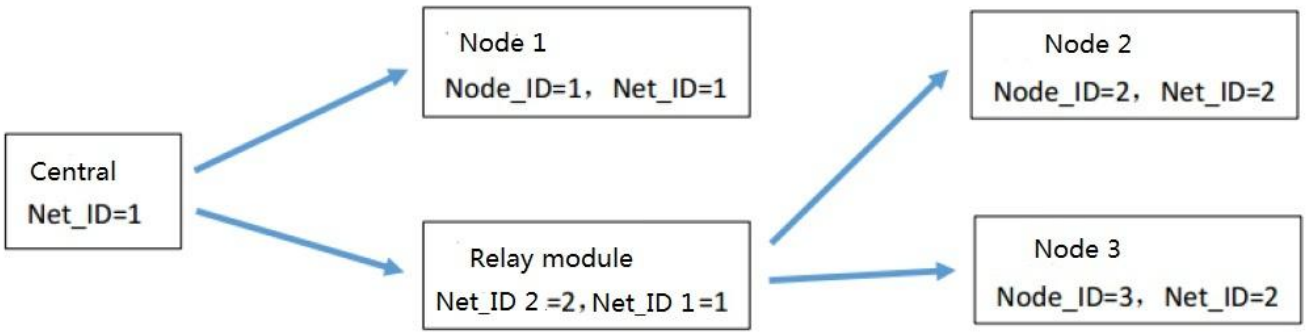

The relay module can be configured via RF tool

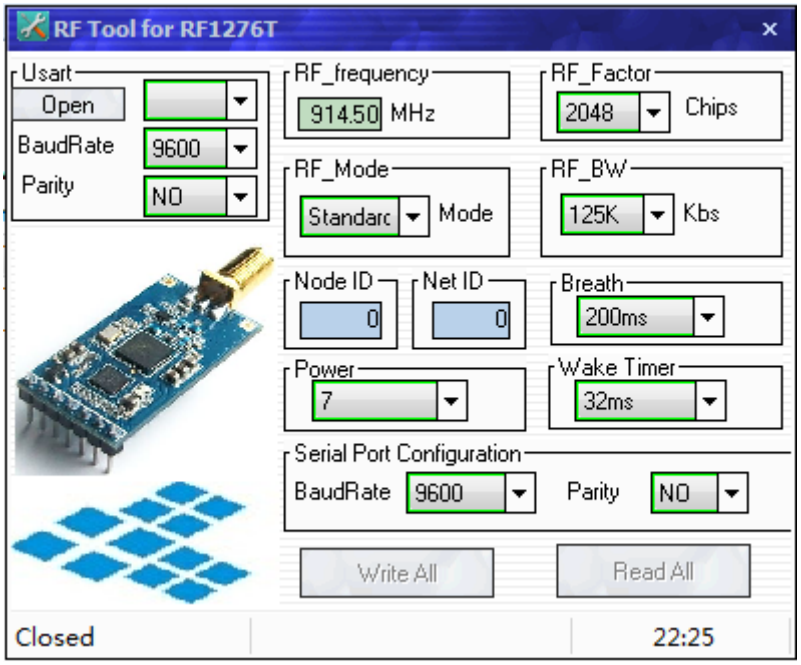

The Net ID is the same as Central's Net ID. The Node ID is the same as Net ID of Node. The other parameters also should be the same as the network configuration.

d, Express communication mode.

The logic level of SET pin is used to switch between express communication and breath period communication in central/node mode. In sleep mode, the SET pin should be connected to logic high or suspended. If the SET pin is set to high, the node module will keeps CAD wireless monitor to detect if there is any wireless signal coming at the interval of the breath period. If the SET pin is set to logic low, the node module will keep in receive mode so the central module will not need to send long preamble. The most importance is the logic level of SET for central module must be the same as the node module.

7. Dimension

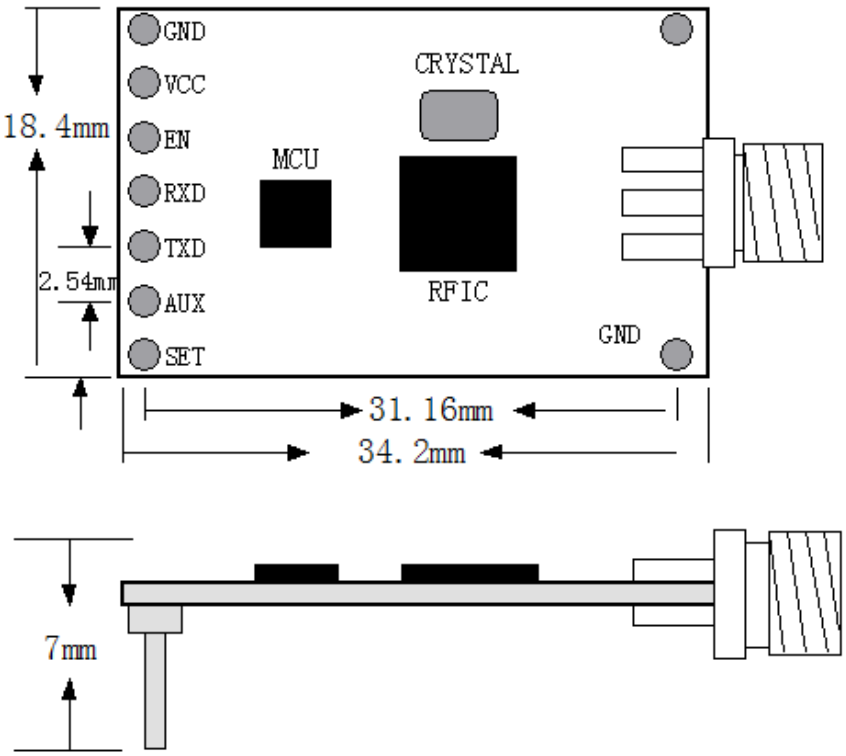

Figure 1: Size of Module

8. Parameter Configuration

Through serial port or using setting tool 'Rf-Tool', users can configure relative parameters such as frequency, UART rate, air rate, checkout mode and so on.

It is very simply for configuration. Based on different requirement, all options can be selected visually. It is shown in Table 2 and Figure 3.

Parameter	Description
UART area	The values are fixed at 9.6k bps & no parity check.
RF frequency	It indicates the center frequency of RF carrier
RF mode	Standard mode, Low Power mode
RF_Factor	Lora spreading factor. Larger value means higher sensitivity but longer air transmission time

RF_BW	Lora bandwidth. Larger value means lower sensitivity. Recommended value: 125K.
Node ID	It is available in the Central/Node mode.
Net ID	Only the modules with the same network ID can communicate with each other. It can avoid interferences from irrelative modules
Power	It is used to set the output power of RF1276T. There are 7 power levels. The 7 means the max. output power -9dBm and 0 means the lowest output power.
Serial baudrate	It defines the data rate between RF1276T and the host
Serial parity	It defines the parity check between RF1276T and the host
Breath	It is available in the Central/Node mode.It defines the Breath period of Node module.
Wake Timer	It is available for the Node module only. It defines the time of module waking up to receive the preamble from Central module.

Table 2: Parameter Specification

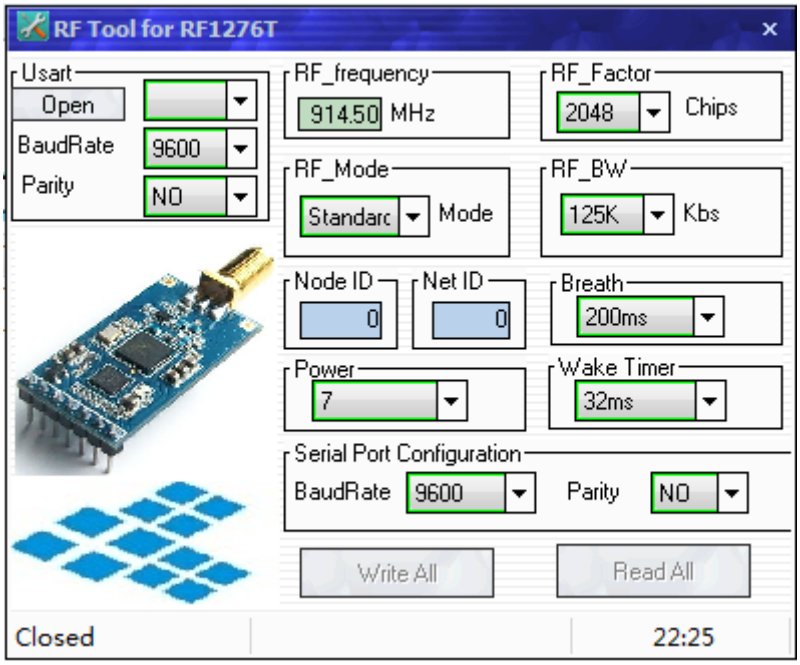

Figure 3: Interface of RF Tool

Users can configure the parameters (frequency, data rate, output power, RF Factor, RF Bandwith etc.) through PC or in circuit.

♦ Setting through PC. RF1276T port is UART/TTL. When RF1276T connecting with PC, users need to use USB adapter. AppconWireless provides USB adapter as accessory. The schematic is shown in Figure 4

Firstly users connect converter board to PC through DB9 cable and open 'RF Tool', then insert module into converter board. After that, the status column of 'RF tool' will give a indication 'Found Device'. Users then can read/write the module.

If users connect USB converter, USB drive ''PL-2303_Driver_Installer''need be installed firstly. The drive has different version for different OS. USB converter has five wires with five different colors: Black, Red, Blue, Yellow, Green. Black wire is GND pin. Red wire is VCC pin. Blue wire is TXD pin. EN pin and SET pin should be connect to GROUND.

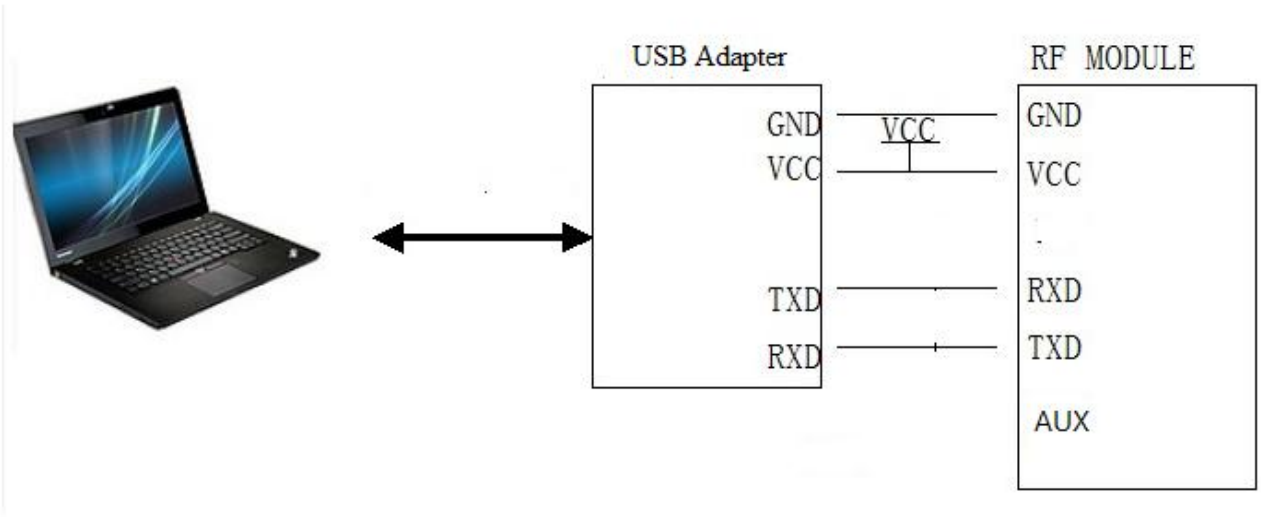

Figure 4: The connection diagram

♦ Setting in circuit . Users also can use microcontroller to change the default parameters. The work mechanism is the same as in PC.

Sync word		ID code		Header	Command		Length	Data	CRC	End code	
0xAF	0xAF	0x00	0x00	0XAF	XX	YY	LEN	XXXX	CS	0X0D	0X0A

RF1276T Command Structure

Notes: 1. The ID code is 0x00 0x00 in command.

2. In command code, XX in sending command is 0x80 and in response command is 0x00. YY is the command type. The work mode of

YY	TYPE	YY	TYPE	YY	TYPE	YY	TYPE	YY	TYPE
0x01	write	0x02	read	0x03	standard	0x04	Central	0x05	Node

Command Type and Value

3. Length refers to the data bytes between Length byte and CRC byte which the two bytes are not calculated in the length.

4. Data refers to the detailed parameters which need to be changed.

Baudrate	Parity	Frequency	RF_Factor	Mode	RF_BW	ID	NetID	Power

Parameter Sequence in Data Section

Parameter	Unit	Length(Byte)	Decription
Serial Baudrate	Kbps	1	1.2, 2.4, 4.8, 9.6, 19.2, 38.4, 57.6 equals to 1,2,3,4,5,6,7
Parity		1	0: No parity; 1: Odd parity; 2: Even parity
Freq.	MHz	/	Channel Spacing: 1MHz Channel Number: 26 Operating Frequency: 902.5MHz~927.5MHz
RF_Factor	Chips	1	7=128, 8=256, 9=512, 10=1024, 11=2048, 12=4096
RF_BW	Kbs	1	6=62.5K，7=125K，8=256K，9=512K
Output power	dBm	1	1~7; 1 refers to -9dBm and 7 for 0dBm
Breath	s	1	0=2s，1=4s，2=6s，3=8s, 4=10s
Wake Timer	ms	1	0=2ms, 1=4ms, 2=8ms 3= 16ms 4= 32ms, 5= 64ms;

Parameter Length & Value Range

5. CS refers to CRC code which is the remainder of the sum of data section divided by 256 In order to understand the command. The section will demonstrate the use of commands by some examples.

Write Command Code: 0x01

Command: 0xAF, 0xAF, 0x00, 0x00, 0xAF, 0x80, 0x01, 0x0C, ... CS, 0x0D, 0x0A

Response.: 0xAF, 0xAF, 0x00, 0x00, 0xA F, 0x00, 0x01, 0x0C, ... CS, 0x0D, 0x0A

Read Command Code: 0x02

Command: 0xAF, 0xAF, 0x00, 0x00, 0xAF, 0x80, 0x02, 0x02,0x00,0x00,0x91, 0x0D, 0x0A

Response.: 0xAF, 0xAF, 0x00, 0x00, 0xAF, 0x00, 0x02, 0x02,0x00,0x00,0x91, 0x0D, 0x0A

Standard Mode Command Code: 0x03

Command: 0xAF, 0xAF, 0x00, 0x00, 0xAF, 0x80, 0x03, 0x02, 0x00, 0x00, 0x92, 0x0D, 0x0A

Response.: 0xAF, 0xAF, 0x00, 0x00, 0xAF, 0x00, 0x03, 0x02, 0x00, 0x00, 0x92, 0x0D, 0x0A

Central Mode Command Code: 0x04

Command: 0xAF, 0xAF, 0x00, 0x00, 0xAF, 0x80, 0x04, 0x02, 0x00, 0x00, 0x93, 0x0D, 0x0A

Response.: 0xAF, 0xAF, 0x00, 0x00, 0xAF, 0x00, 0x04, 0x02, 0x00, 0x00, 0x93, 0x0D, 0x0A

Node Mode Command Code: 0x05

Command: 0xAF, 0xAF, 0x00, 0x00, 0xAF, 0x80, 0x05, 0x02, 0x00, 0x00, 0x94, 0x0D, 0x0A

Response.: 0xAF, 0xAF, 0x00, 0x00, 0xAF, 0x00, 0x05, 0x02, 0x00, 0x00, 0x94, 0x0D, 0x0A

Please note that the working modes changed by the 0x03, 0x04 and 0x05 commands will not be written into nonvolatile memory so the working mode will be restored to the former mode before change after power-off. Users can use the WRITE command to change the working mode of module to standard mode or low power mode but the sleep mode will be restored to standard mode after next power-on even if the WRITE command is used.

9. Application Schematic:

The connection schematic between RF1276T and MCU or terminal is shown as below.

The parameter of RF1276T'serial port must match with MCU or terminal's (RF1276T has the same serial port baud rate and parity style with MCU or terminal). Two or more RF1276Ts in a system should have the same parameters such as TX/RX frequency, air date rate and RF channel.

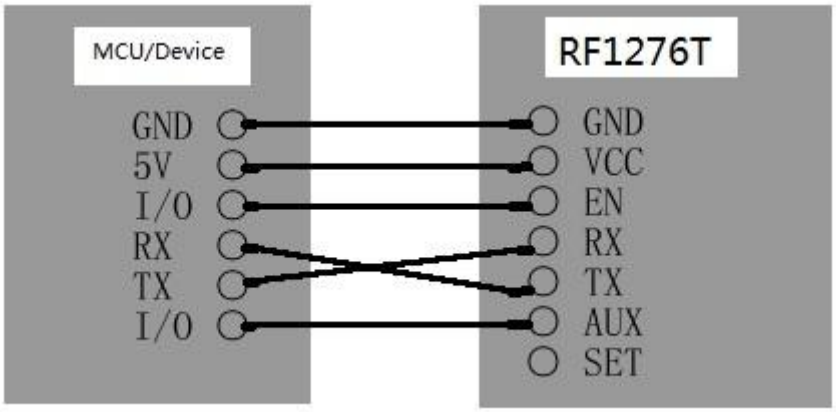

Caution: 1. When RF1276T is installed, make sure the antenna is far away from device to enhance the performance.

2. RF1276T should have the same common ground with MCU or terminal. Otherwise it may cause the module irregular working.

3. When RF1276T works normal, DO NOT touch the module and antenna.

Figure 7: Connection between Module and Device (TTL/UART port)

10. Constructing Network (one point to multi-point):

RF1276T is a semi-duplex module, which can be communicated by point to point or one point to multi-point. In the second mode, user needs to set one master module, while the others are slave modules. Every module must only have one unique ID. The coordination of communication is controlled by the master module, which sends data or commands including ID information. All slave modules can receive the data packets, and compare the ID with itself. If they are matched, the module will deal with the data packets. Otherwise, it will discard them. In order to avoid interfering each other, only one module can be in transmitting state when the network is working. RF1276T can set many different frequencies so that many networks can work in the same place and at the same time.

User should pay attention to the following questions based on the complex transfers in the air and some inherency characteristics of wireless communication:

1）Latency of wireless communication

The wireless terminal keeps receiving data packets after waiting for a while to ensure no data any more. There should be tens to hundreds mil-seconds latency from transfer to receiver (the exact latency depended on UART rate, air rate and the size of data package). In addition, it also need consume some time to transmit from module to terminal, but the delay time is permanent in the same condition.

2）Data flux control

Although there is a buffer zone with 256 bytes in the wireless module, when the UART rate is higher than the air rate, there must be a problem about the data flux. It may cause to lose some data because the data overflow from the buffer. Under this condition, it must be ensured that the average UART rate should NOT

higher than 60 percent of the air rate. For instance, the UART rate is 9600bps, the air rate is 4800bps. If UART rate is the same as the air rate, the only way is to interval the transmitting time. If terminal transmits 100bytes to UART every time, it will take 104ms every time. (104ms/0.6)*(9600/4800) =347ms. So if the interval time that terminal transmit 100bytes to UART should NOT less than 347ms every time, those mentioned problems can be avoided.

3）Error control

The wireless network module has strong capability of anti-interference because of the high efficiency checking error correction with interleaving encoding technology. However, when it is in a bad circumstance that has strong electric interference, the data may be lost or receive some error data. User can increase the development of the system link layer protocol. For instance, if user can increase TCP/IP slip window and repeat transmitting functions, it will improve the reliability and ability of wireless network communication.

4) Selection of antenna

Antenna is a very important factor of the communication system. The quality of antenna impacts the capability of communication system. So user should strictly choose the quality of antenna. Generally speaking, it mainly contains two points: the type of antenna (size) and its electric capability. The antenna must be matched with the frequency of communication system.

11. Order information

a) RF1276T-915

12. Q&A:

Questions and Answers	
Can not communicate between two devices	1. The communication protocol is different between two modules, for instance: data rate and checkout.
	2. The frequency or RF data rate is different between two communicated modules.
	3. They are not the same kind products.
	4. The connection between module and terminal is wrong.
	5、The module is wrong.
	6. The setting of EN is wrong.
	7. The communication distance exceeds the range, or the connection of antenna is bad.
Short communication distance	1. The supply voltage exceeds range
	2. The ripple of power is too big.
	3. The connection of antenna is bad or it is a wrong kind of antenna
	4. Antenna is too close to the surface of metal or the ground
	5. Receiving circumstance is very bad, for instance buildings and strong interference.
	6. There is interference of the same frequency
Receive wrong data	1. Wrong setting of COM, for example, Baud rate is wrong
	2. The connection of UART is wrong.
	3. The cable to the UART is too long.

FCC Statement

This equipment has been tested and found to comply with the limits for a Class B digital device, pursuant to part 15 of the FCC Rules. These limits are designed to provide reasonable protection against harmful interference in a residential installation. This equipment generates, uses and can radiate radio frequency energy and, if not installed and used in accordance with the instructions, may cause harmful interference to radio communications. However, there is no guarantee that interference will not occur in a particular installation. If this equipment does cause harmful interference to radio or television reception, which can be determined by turning the equipment off and on, the user is encouraged to try to correct the interference by one or more of the following measures:

- Reorient or relocate the receiving antenna.
- Increase the separation between the equipment and receiver.
- Connect the equipment into an outlet on a circuit different from that to which the receiver is connected.
- Consult the dealer or an experienced radio/TV technician for help.

Caution: Any changes or modifications to this device not explicitly approved by manufacturer could void your authority to operate this equipment.

This device complies with part 15 of the FCC Rules. Operation is subject to the following two conditions: (1) This device may not cause harmful interference, and (2) this device must accept any interference received, including interference that may cause undesired operation.

RF Exposure Information

This equipment complies with FCC radiation exposure limits set forth for an uncontrolled environment.

Important Note:

Any company of the host device which install this modular with limit modular approval should perform the test of radiated emission and spurious emission according to FCC part 15C:15.249 and 15.209 requirement, only if the test result comply with FCC part 15.249 and 15.209 requirement, then the host can be sold legally.

End Product Labeling

If the FCC identification number is not visible when the module is installed inside another device, then the outside of the device into which the module is installed must also display a label referring to the enclosed module. This exterior label can use wording such as the following: Contains Transmitter Module FCC ID: 2APJJ-RF1276T.

Manual Information to the End User

The OEM integrator has to be aware not to provide information to the end user regarding how to install or remove this RF module in the user’s manual of the end product which integrates this module.

The end user manual shall include all required regulatory information/warning as show in this manual.

The modular is not intended to be fielded serviceable as without shielding, host manufacturer must be considered shielding when integrating a module.

When the module is installed inside another device, the user manual of this device must contain below warning statements;

This device complies with Part 15 of the FCC Rules. Operation is subject to the following two conditions:

(1) This device may not cause harmful interference.

(2) This device must accept any interference received, including interference that may cause

Changes or modifications not expressly approved by the party responsible for compliance could void the user's authority to operate the equipment. The devices must be installed and used in strict accordance with the manufacturer's instructions as described in the user documentation that comes with the product.

ISED Statement
- English: This device complies with Industry Canada license - exempt RSS standard(s).
Operation is subject to the following two conditions: (1) This device may not cause interference, and (2) This d evice must accept any interference, including interference that may cause undesired operation of the device.
- French: Le présentappareilestconforme aux CNR d'Industrie Canada applicables aux appareils radio exempts de licence. L'exploitationestautorisée aux deux conditions suivantes: (1) l'appareil ne doit pas p roduire de brouillage, et (2) l'utilisateur de l'appareildoit accepter tout brouillageradioélectriquesubi, mêmesi le brouillageest susceptible d'encompromettre le fonctionnement.

Radiation Exposure Statement
This equipment complies with Canada radiation exposure limits set forth for an uncontrolled environment.
Cet équipement est conforme Canada limites d'exposition aux radiations dans un environnement non contrôlé.

This device is intended only for OEM integrators under the following condition:
The transmitter module may not be co-located with any other transmitter or antenna.
As long as the condition above is met, further transmitter test will not be required. However, the OEM integrator is still responsible for testing their end-product for any additional compliance requirements required with this module installed.
Cet appareil est conçu uniquement pour les intégrateurs OEM dans les conditions suivantes:
Le module émetteur peut ne pas être coïmplanté avec un autre émetteur ou antenne.
Tant que les 1 condition ci-dessus sont remplies, des essais supplémentaires sur l'émetteur ne seront pas nécessaires. Toutefois, l'intégrateur OEM est toujours responsable des essais sur son produit final pour toutes exigences de conformité supplémentaires requis pour ce module installé.

Important Note:
Any company of the host device which install this modular with limit modular approval should perform the test of radiated emission and spurious emission according to RSS-210 and RSS-Gen requirement, only if the test result comply with RSS-210 and RSS-Gen requirement, then the host can be sold legally.
Note Importante:
toute entreprise de l'hôte qui installent ce dispositif modulaire avec limite approbation devrait effectuer l'essai des modules et des rayonnements non essentiels des émissions rayonnées selon rss-210 et le cnr - gen, seulement si le résultat d'essai conforme rss-210 et le cnr - gen, puis l'hôte peut être vendu légalement.

End Product Labeling
The final end product must be labeled in a visible area with the following: Contains IC: 23851-RF1276T.
Plaque signalétique du produit final
Le produit final doit être étiqueté dans un endroit visible avec l'inscription suivante: Contient des IC: 23851-RF1276T.

Manual Information to the End User
The OEM integrator has to be aware not to provide information to the end user regarding how to install or remove this RF module in the user’s manual of the end product which integrates this module.
The end user manual shall include all required regulatory information/warning as show in this manual.
Manuel d'information à l'utilisateur final
L'intégrateur OEM doit être conscient de ne pas fournir des informations à l'utilisateur final quant à la façon d'installer ou de supprimer ce module RF dans le manuel de l'utilisateur du produit final qui intègre ce module.
Le manuel de l'utilisateur final doit inclure toutes les informations réglementaires requises et avertissements comme indiqué dans ce manuel.