1. General

RF6610M series is a low cost, ultra-low power, high performance two way semi-duplex LoRa modulation transceiver with operation at 915Mhz. It integrates with 32 bit high speed low-powered MCU and high performance ASR6601. ASR6601 is a combo consisted of RF chip SX1262 and Arm Cortex M4 core MCU. Adopting high efficiency forward error correction with interleaving encoding (FEC) technology, it makes anti-interference ability and reception sensitivity greatly improved. That guarantees good performance in the harsh environment such as some industrial application. The FEC technology is advanced and unique in radio data communication field.

RF6610M has the UART interface, that make it is easy to implement wireless data transmission. It is flexible for users to set the baud rate, frequency, output power, air data rate etc parameters. The compact size makes it an ideal option for radio data communication application.

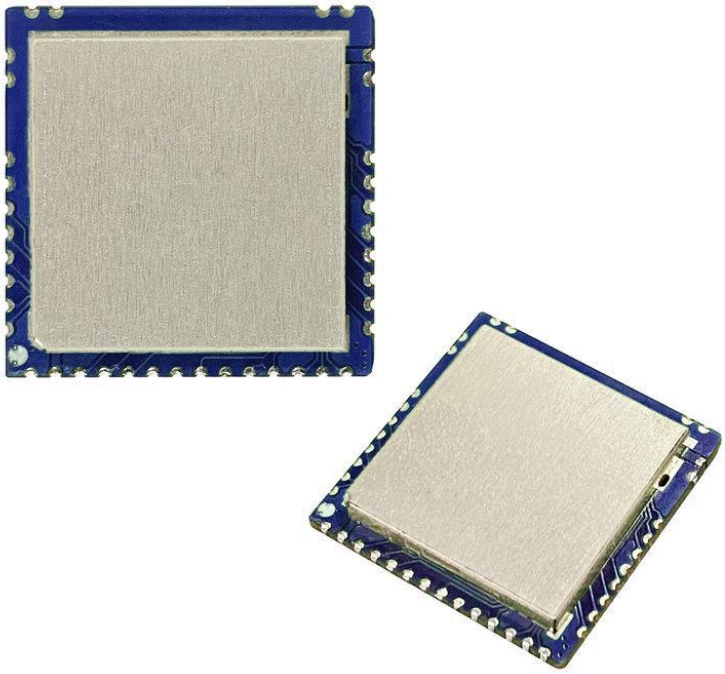

2. Features

- Air data rate: 300 - 62500bps, can be configured through RF tool
- UART data rate: 1200 - 115200bps, can be configured through RF tool
- Frequency: 902MHz-928MHz
- Working Current: 120mA(TX), 12mA(RX),2.0uA(Sleeping)
- parity of series COM: 8E1/8N1/8O1
- LoRa modulation
- Receive sensitivity: -135dBm(@600bps)
- UART/TTL
- AES128 encryption
- Exceed 1000 bytes data buffer
- Supply Voltage: 3.0V – 5.5V
- Dimension: 23.0mm *23.0mm *3.00mm

3. Application

- Automated Meter Reading (AMR)
- Remote control, remote measurement system
- Access control
- Data collection
- Identification system
- IT household appliance
- Wireless alarm system

4. Maximum specification

Symbol	Parameter	Min	Max	Units
VCC	Supply Voltage	3.0	5.5	V
TOT	Operation Temperature	-30	85	℃
HOH	Operation Humidity	10%	90%	
TST	Storage Temperature	-55	125	℃

5. Pin-Out description:

RF6610M module has 38 pins. Refers to the Table 1：

No.	Pin Symbol	Pin Function	Pin Description
1	GND	Ground pin for power	connected to Common GND
2	VCC	Power Supply	Power range 3.0V-5.5V
3	PA14	Sleep Enable pin	RF6610M enters sleep in High level. For Low level, the module wakes up and works normally.
4	PA15	Radio data indication, Data-in/out indication	It is used to wake up the external MCU
5	PD14	NC	TBD, reserved
6	PA11	Express communication pin	Available in the central/node module. Low effective.
7	PB1	TX2, Data output Pin	3.3V level, data out pin, connect external MCU’s RXD.
8	PB0	RX2, Data input Pin	3.3V level, data in pin, connect external MCU’s TXD.
9	PC15	LP-TX, output Pin for Central-Node mode	3.3V level, data out pin, connect external MCU’s RXD.
10	PD12	LP-RX, input Pin for Central-Node mode	3.3V level, data in pin, connect external MCU’s TXD.
11	REST	hardware reset	low level effective
12	PA8	RS485 control pin	RS485 function control
13	PA5	LED-RX	LED indication, RX data indication, high level on.
14	PB4	LED-TX	LED indication, TX data indication, high level on.
15-22	NC		
23	GND	Ground pin for Antenna	RF Ground for antenna
24	RF	antenna	Connect to antenna
25-32	GND	Ground pin for power	connected to Common GND
33-38	NC		

Table 1: Pin definition

6. Dimensions

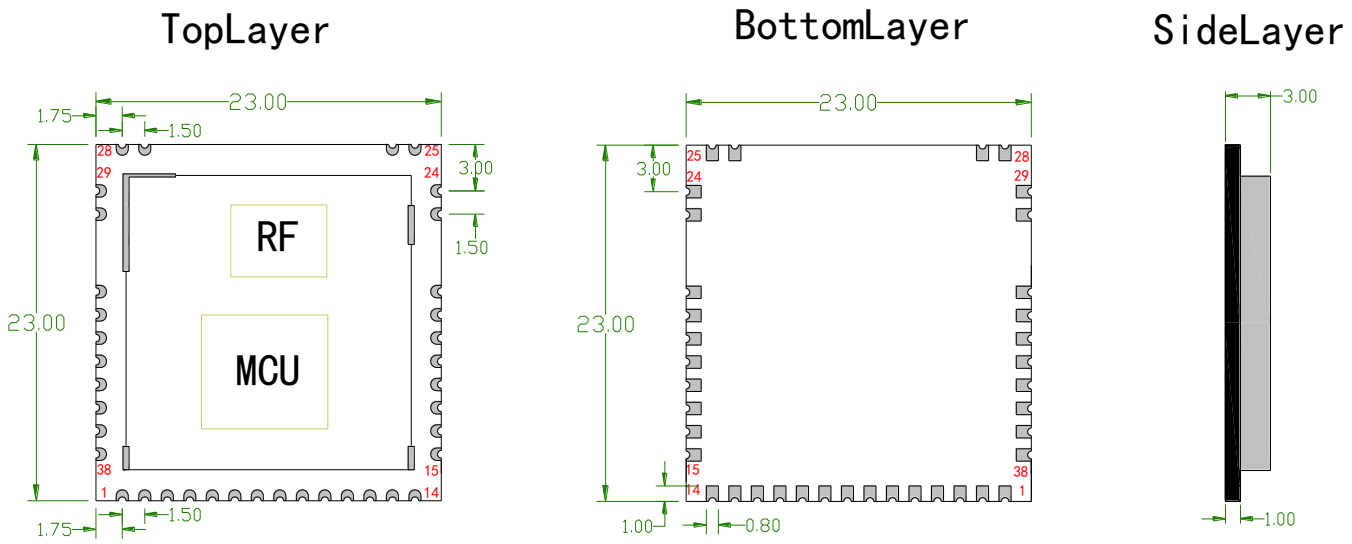

Figure 1: Dimension and Structure Diagram

7. Working mode

a. Normal mode

Normal mode is a straight forward communication in which the module receives from source and sends data to the destination through serial port (UART/TTL) at raw data format. The communication is transparent. User set the module as the standard mode in the RF tool that make the module in the transparent mode. RF6610M has built in the encryption, data packaging and unpacking. Users don't need to consider the data processing during implement. The PA15 pin of RF6610M will give indication about the data IN/OUT of serial port 2ms in advance in order to wake up the external MCU.

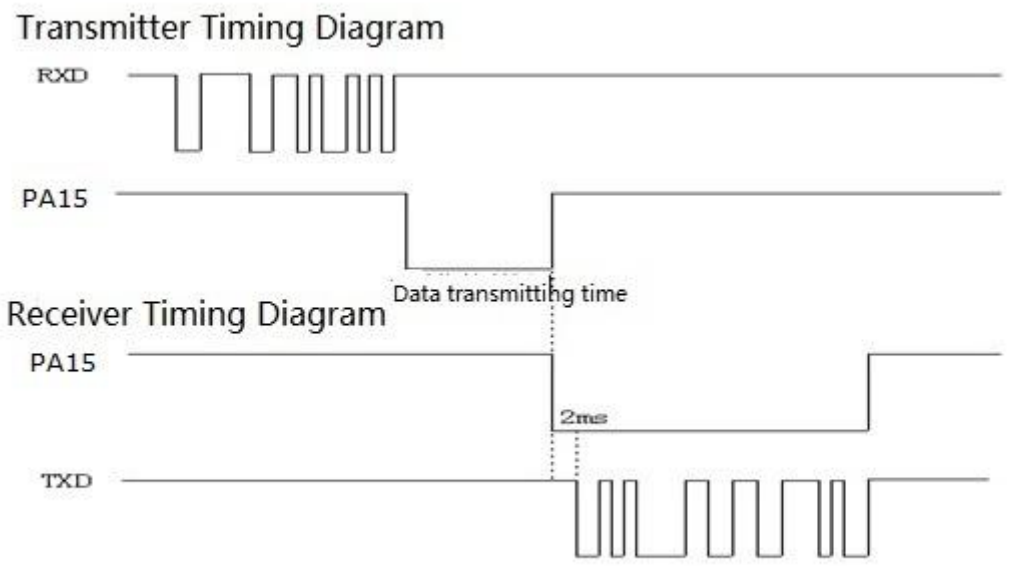

Figure 2: Timing Sequence in Transparent Mode

b. Central-node mode

In this mode, one RF6610M module needs to set as the central mode and other modules should be node mode. In central mode, RF6610M works at the full performance with its full power consumption. In the node mode, some functions are closed to lower the power with 5% or less full power consumption. When the PA14 pin is connected to logic high, the node module only keeps CAD wireless monitor to detect if there is any preamble to wake up and doesn't handle the data from the external MCU through UART. If the node module sends data to the central module, user needs to set PA14 pin to low to activate the node module and the node modules handle the data from the external MCU through UART.

In the configuration tool, there is an option for Node ID which is used to set the ID of node module. If the ID of the node modules is 0x00 0x00, the node module will not make address detection. In other words all nodes will receive the data including address from central module. The data package of the first two bytes should be the node ID. It is a broadcast in the network

E.g. The Central module sends data'0x00 0x01 0x22 0x33 0x44 0x55', all of the node modules with ID '0x00 0x00' will receive the data '0x00 0x01 0x22 0x33 0x44 0x55'. If the ID of node module is not 0x00 0x00, the node module with ID the same as the one in the first two bytes of data package can receive this data packet.

E.g. The Central module sends data '0x00 0x01 0x22 0x33 0x44 0x55', the module with ID '0x00 0x01' can get the data '0x22 0x33 0x44 0x55'and the first two byte ID will be filtered.

In order to guarantee the reliability of communication, the length of data package should not exceed 64 bytes.

8. Parameter Configuration

Through serial port or using setting tool 'Rf-Tool', users can configure relative parameters such as frequency, UART rate, air rate, checkout mode and so on.

It is very simply for configuration. Based on different requirement, all options can be selected visually. It is shown in Table 2 and Figure 3.

Parameter	Description
Serial parameter	The values are fixed at 9.6k bps & no parity check.
Frequency	It indicates the center frequency of RF carrier
Work mode	Normal mode, Central mode, Node mode, SPF mode
RF-Factor	Lora spreading factor. Larger value means higher sensitivity but longer air transmission time
RF-BW	Lora bandwidth. Larger value means lower sensitivity. Recommended value: 125K.
Code Rate	LoRa coding rate. The values are 4/5，4/6, 4/7, 4/8. The default setting is 4/6.
Node ID	It is available in the Central/Node mode.
Net ID	Only the modules with the same network ID can communicate with each other. It can avoid interferences from irrelative modules
TX Power	It is used to set the output power of RF6610M. There are 7 power levels. The 7 means the max. output power---20dBm and 0 means the lowest output power.
Serial baud-rate	It defines the data rate between RF6610M and the host
Serial parity	It defines the parity check between RF6610M and the host
Sleep Period	It is available in the Central/Node mode. It defines the sleep period of Node module.
Wake Period	It is available for the Node module only. It defines the time of module waking up to receive the preamble from Central module.
Extension Node address	It defines 8 bytes Node ID compared to 2 bytes Node ID. It is available in the Central/Node mode. It also support the address display on the message or not and which position the Node ID show in the message.

SPF mode	SPF mode is a mode with transparent transmission. The module runs at low power status with certain wake timer and CAD monitoring. It can support fixed data bytes transmission.
Heartbeat period	It is available in the Central/Node mode. It defines the heartbeat period from Node module to Central module.
TX-CAD	It is a function to detect the air environment before transmitting. It will avoid the signal collision in the radio communication.

Table 2: Parameter Specification

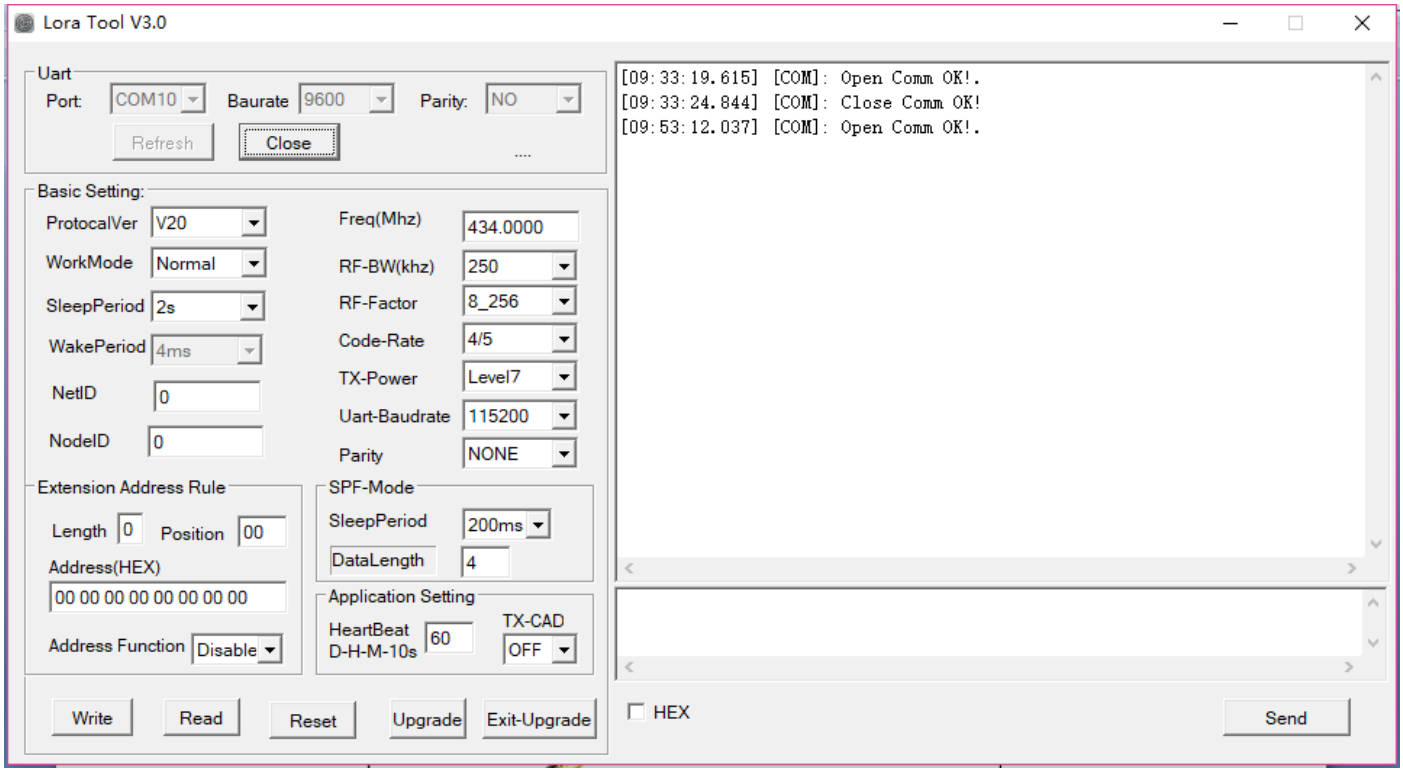

Figure 3: Interface of RF Tool

Users can configure the parameters (frequency, data rate, output power, RF Factor, RF Bandwidth etc.) through PC or in circuit.

♦ Setting through laptop. RF6610M port is UART/TTL. When RF6610M connecting with PC, users need

to use USB adapter. AppconWireless provides USB adapter as accessory. The schematic is shown in Figure 3

Firstly users connect converter board to PC through DB9 cable and open 'RF Tool', then insert module into converter board. After that, the status column of 'RF tool' will give a indication 'Found Device'. Users then can read/write the module.

If users connect USB converter, USB driver needs be installed firstly. The driver has different version for different OS. USB converter has five wires with five different colors: Black, Red, Blue, Yellow, Green, Black wire is GND pin. Red wire is VCC pin. Blue wire is TXD pin. PE1 pin should be connected to GROUND.

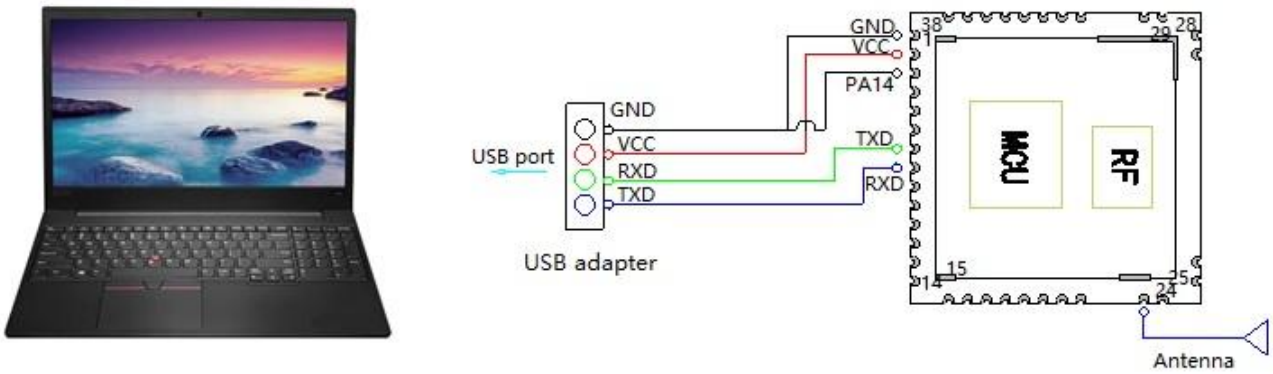

Figure 4: The connection diagram

♦ Setting in circuit . Users also can use microcontroller to change the default parameters. The work mechanism is the same as the laptop.

Sync word		ID code		Header	Command		Length	Data	CRC	End code	
0xAF	0xAF	0x00	0x00	0XAF	XX	YY	LEN	XXXX	CS	0X0D	0X0A

RF6610M Command Structure

Notes: 1. The ID code is 0x00 0x00 in command.

2. In command code, XX in sending command is 0x80 and in response command is 0x00. YY is the command type. The work mode of

YY	TYPE	YY	TYPE	YY	TYPE	YY	TYPE	YY	TYPE
0x01	write	0x02	read	0x03	standard	0x04	Central	0x05	Node

Command Type and Value

3. Length refers to the data bytes between Length byte and CRC byte which the two bytes are not calculated in the length.

4. Data refers to the detailed parameters which need to be changed.

Baudrate	Parity	Frequency	RF_Factor	Mode	RF_BW	ID	Net ID	Power

Parameter Sequence in Data Section

The air data rate and sensitivity of RF6610 defines by the RF-Factor, RF-BW and Code rate. The following chart is a relationship between air data rate, sensitivity and RF-Factor, RF-BW, Code rate.

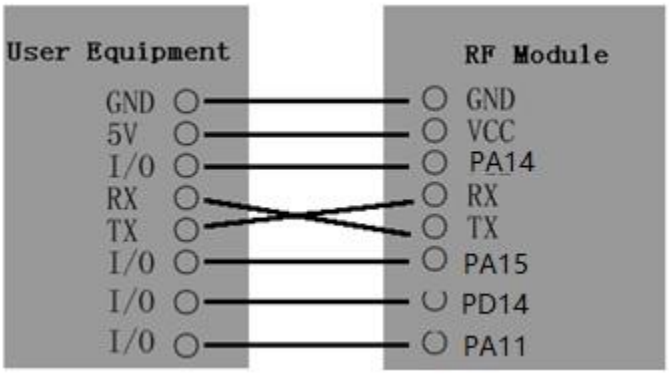

Caution: 1. When RF6610M is installed, make sure the antenna is far away from device to enhance the performance.

2. RF6610M should have the same common ground with MCU or terminal. Otherwise it may cause the module abnormal performance.

3. When RF6610M works normal, DO NOT touch the module and antenna.

Figure 6: Connection between Module and Device (TTL/UART port)

10. Order information

a) RF6610M-915

11. Q&A:

Questions and Answers	
Can not communicate between two devices	1. The communication protocol is different between two modules, for instance: data rate and checkout.
	2. The frequency or RF data rate is different between two communicated modules.
	3. They are not the same kind products.
	4. The connection between module and terminal is wrong.
	5、The module is wrong.
	6. The setting of EN is wrong.
	7. The communication distance exceeds the range, or the connection of antenna is bad.
Short communication distance	1. The supply voltage exceeds range
	2. The ripple of power is too big.
	3. The connection of antenna is bad or it is a wrong kind of antenna
	4. Antenna is too close to the surface of metal or the ground
	5. Receiving circumstance is very bad, for instance buildings and strong interference.
	6. There is interference of the same frequency
Receive wrong data	1. Wrong setting of COM, for example, Baud rate is wrong
	2. The connection of UART is wrong.
	3. The cable to the UART is too long.

APPCON WIRELESS TECHNOLOGIES CO.,LTD Add: 28#, Longjin road,Xili zone, Nanshan District Shenzhen P.R.C(518043) TEL: +86-185 0309 2598 FAX: +86-755-83405160 Email: sales@appconwireless.com Web: http://www.appconwireless.com	AppconWireless technologies reserves the right to make corrections, modifications, improvements and other changes to its products and services at any time and to discontinue any product or service without notice. Customers are expected to visit websites for getting newest product information before placing orders. These products are not designed for use in life support appliances, devices or other products where malfunction of these products might result in personal injury. Customers using these products in such applications do so at their own risk and agree to fully indemnify AppconWireless technologies for any damages resulting from improper use

FCC Statement

This device complies with part 15 of the FCC Rules. Operation is subject to the following two conditions:

(1) This device may not cause harmful interference, and

(2) this device must accept any interference received, including interference that may cause undesired operation.

This equipment has been tested and found to comply with the limits for a Class B digital device, pursuant to part 15 of the FCC Rules. These limits are designed to provide reasonable protection against harmful interference in a residential installation. This equipment generates, uses and can radiate radio frequency energy and, if not installed and used in accordance with the instructions, may cause harmful interference to radio communications. However, there is no guarantee that interference will not occur in a particular installation. If this equipment does cause harmful interference to radio or television reception, which can be determined by turning the equipment off and on, the user is encouraged to try to correct the interference by one or more of the following measures:

- Reorient or relocate the receiving antenna.
- Increase the separation between the equipment and receiver.
- Connect the equipment into an outlet on a circuit different from that to which the receiver is connected.
- Consult the dealer or an experienced radio/TV technician for help.

This modular has been tested and found to comply with part 15 requirements for Modular Approval.

FCC Caution: Any changes or modifications not expressly approved by the party responsible for compliance could void the user's authority to operate the equipment. This transmitter must not be co-located or operating in conjunction with any other antenna or transmitter.

Integration instructions for host product manufacturers according to KDB 996369 D03 OEM Manual v01r01

2.2 List of applicable FCC rules

CFR 47 FCC Part 15 Subpart C has been investigated. It is applicable to the modular transmitter

2.3 Specific Operational Use Conditions - Antenna Placement Within the Host Platform

The module is tested for standalone mobile RF exposure use condition.

- The antenna must be installed such that 20cm is maintained between the antenna and users,
- The transmitter module may not be co-located with any other transmitter or antenna.

In the event that these conditions cannot be met (for example certain laptop configurations or co-location with another transmitter), then the FCC authorization is no longer considered valid and the FCC ID cannot be used on the final product. In these circumstances, the OEM integrator will be responsible for re-evaluating the end product (including the transmitter)

and obtaining a separate FCC authorization.

2.4 Limited Module Procedures

Not applicable

2.5 Trace Antenna Designs

Not applicable

2.6 RF Exposure Considerations

This device complies with FCC radiation exposure limits set forth for an uncontrolled environment. This equipment should be installed and operated with minimum distance 20cm between the radiator & your body.

2.7 Antenna Type and Gain

The following antennas have been certified for use with this module.
Only antennas of the same type with equal or lower gain may also be used with this module. Other types of antennas and/or higher gain antennas may require the additional authorization for operation.
Antenna Specification list below:

Model Name	Manufacturer	Type	Maximum Gain (dBi)	Frequency Range
RST-W1B6-5008-23M-FY-002	RALTRON ELECTRONICS	External with R/A SMA Male	2.00	902-928

2.8 End Product Labelling Compliance Information

When the module is installed in the host device, the FCC ID label must be visible through a window on the final device or it must be visible when an access panel, door or cover is easily removed. If not, a second label must be placed on the outside of the final device that contains the following text: "Contains FCC ID: **2APJJ-RF6610M**". The FCC ID can be used only when all FCC compliance requirements are met.

2.9 Information on Test Modes and Additional Testing Requirements

This transmitter is tested in a standalone mobile RF exposure condition and any co-located or simultaneous transmission with other transmitter(s) class II permissive change re-evaluation or new FCC authorization.
Host manufacturer installed this modular with single modular approval should perform the test of radiated emission and spurious emission according to FCC part 15C, 15.209, 15.207 requirement, only if the test result comply with FCC part 15C, 15.209, 15.207 requirement, then the host can be sold legally.

2.10 Additional testing, Part 15 Subpart B Disclaimer

This transmitter modular us tested as a subsystem and its certification does not cover the FCC Part 15 Subpart B rules requirement applicable to the final host. The final host will still need to be reassessed for compliance to this portion of rules requirements if applicable.

As long as all conditions above are met, further transmitter test will not be required. However, the OEM integrator is still responsible for testing their end-product for any additional compliance requirements required with this modular installed.

2.11 Manual Information to The End User

The OEM integrator has to be aware not to provide information to the end user regarding how to install or remove this RF module in the user's manual of the end product which integrates this module.

The host integrator must follow the integration instructions provided in this document and ensure that the composite system end product complies with the requirements by a technical assessment or evaluation to the rules and to KDB Publication 996369.

The host integrator installing this module into their product must ensure that the final composite product complies with the requirements by a technical assessment or evaluation to the rules, including the transmitter operation and should refer to guidance in KDB Publication 996369.

OEM/Host Manufacturer Responsibilities

OEM/Host manufacturers are ultimately responsible for the compliance of the Host and Module. The final product must be reassessed against all the essential requirements of the FCC rule such as FCC Part 15 Subpart B before it can be placed on the US market. This includes reassessing the transmitter module for compliance with the Radio and RF Exposure essential requirements of the FCC rules.

2.12 How to Make Changes - Important Note

In the event that these conditions cannot be met (for example certain laptop configurations or co-location with another transmitter), then the FCC authorization is no longer considered valid and the FCC ID cannot be used on the final product. In these circumstances, the OEM integrator will be responsible for re-evaluating the end product (including the transmitter) and obtaining a separate FCC authorization.