AVIGILON™ ALTA

ACCESS CONTROL SYSTEM

Installation Guide

Some hardware may show the Openpath logo.

© 2023, Avigilon Corporation. AVIGILON, the AVIGILON logos, and AVIGILON ALTA are trademarks or registered trademarks of Avigilon Corporation. Allegion, ENGAGE technology and Schlage are trademarks of Allegion plc, its subsidiaries and/or affiliates in the United States and other countries. Safari is a trademark of Apple Inc., registered in the U.S. and other countries and regions. IOS is a trademark or registered trademark of Cisco in the U.S. and other countries and is used under license. All other trademarks are the property of their respective owners.

This document has been compiled and published using product descriptions and specifications available at the time of publication. The contents of this document and the specifications of the products discussed herein are subject to change without notice. Avigilon Corporation reserves the right to make any such changes without notice. Neither Avigilon Corporation nor any of its affiliated companies: (1) guarantees the completeness or accuracy the information contained in this document; or (2) is responsible for your use of, or reliance on, the information. Avigilon Corporation shall not be responsible for any losses or damages (including consequential damages) caused by reliance on the information presented herein.

Avigilon Corporation
avigilon.com

20230721-en

Revisions

Guide	Description
Rev. 2.8	Updates: Install Smart Reader v2 on page 19, Install Smart Keypad Reader on page 20, Install Embedded USB Smart Reader on page 22, Regulatory on page 65
Rev. 2.7	Enable Static Cloud IP field: Add one ACU on page 51, Disable the Static Cloud IP connection on page 53

Contents

Revisions 3

Contents 4

Before you start 8

Conducting site surveys 8

Specifications 9

Installation 10

Network requirements 10

Selecting a backup battery 10

Mounting instructions 10

Mount the enclosure to the wall 11

Install the Core Series board in E1 enclosure 11

Install the Core Series board in E2 enclosure 15

Reader wiring 18

ACU and Wiegand reader wiring 18

Install Smart Reader v2 19

Standard Reader 19

Mullion Reader 20

Install Smart Keypad Reader 20

Standard Keypad Reader 20

Mullion Keypad Reader 22

Install Embedded USB Smart Reader 22

Flush mount 23

Desktop mount 23

Wiring 24

Install Avigilon Video Reader Pro 24
Specifications 25
Prerequisites 25
Installation 25
Network security best practices 28
Install Avigilon Video Intercom Reader Pro 29
System overview 29
Specifications 29
Prerequisites 30
Installation 30
Power the Avigilon Video Intercom Reader Pro 32
Provision the Avigilon Video Intercom Reader Pro 32
Standard configurations 34
Wiring Core Series 24V 4 Door Smart Hubs 34
Wiring Core Series 12/24V 4-Door Smart Hubs 34
Wiring Core Series 24V Elevator Smart Hubs 35
Wiring Core Series12/24V 8-Door Smart Hubs 37
Wiring the REX with door strikes 38
Wiring the REX to electromagnetic locks 39
Wiring fail-safe and fail-safe locking hardware 40
Advanced configurations 40
Wiring Wiegand readers to Avigilon readers 40
Wiring to legacy panels and mobile gateway 40
Change I/O types 41
Wire to Wiegand devices on Core Series Smart Hubs 42
End-of-line supervision 44

Troubleshooting 46
ACU LEDs 46
Status LED on Access Control Core 47
Reader LEDs 47
Avigilon Pro series readers 48
Legacy wiring 48
Resetting ACUs 48
Soft reset 48
Hard reset 49
Reset video readers and video intercom readers 49
Provisioning ACUs 49
Requirements 50
Add ACUs 50
Provisioning steps 53
Test internet connection 55
Network settings 55
Appendix: First-generation Smart Hubs 57
Selecting a backup battery 57
Installing 4-Door Controller with 24V locking hardware 57
Wiring with the 12/24V power supply 58
Wiring with the 12V power supply 60
Wiring the Avigilon Elevator Board to a 4-Door Controller 61
Wiring the 4-Door Controller to legacy panels 62
Troubleshooting 63
Hard reset the ACU 63
4-Door Controller LEDs 64

Regulatory 65
UL 294 65
CAN/ULC 60839-11-1-16 GRADE 1 65
FCC 65
IEC 62368-1 66
RF RADIATION HAZARD WARNING 66
INDUSTRY CANADA NOTICE AND MARKING 66
Warnings 68
Specifications 69

Before you start

This installation guide explains how to install and configure Avigilon Smart Hubs (ACUs), Smart Readers (Smart Reader v2, Smart Keypad Reader, and Embedded USB Smart Reader), and Avigilon Pro series readers (Avigilon Video Reader Pro and Avigilon Video Intercom Reader Pro), as part of the Avigilon Alta access control system. This guide also includes information about Core Series Smart Hubs and first generation Smart Hubs. For more information, see Appendix: First-generation Smart Hubs on page 57.

Conducting site surveys

Before installing Avigilon hardware, conduct a customer site survey to determine the following:

- The number of entries that need to be configured (for example, doors, gates, and elevator floors)
- Whether you're using legacy wiring or new wiring
- The electronic entry mechanisms, Request to Exit (REX) mechanisms, and door contact sensors that will be used and their power requirements.

  If your locking hardware requires 24V, either use a Smart Hub with an .24V power supply or use a separate 24V supply.
- Whether you're providing backup batteries for any of the following ACUs. See Selecting a backup battery on page 10.
  - Avigilon 12/24V 4-Door SmartHub
  - Avigilon 24V 4-Door Smart Hub
  - Avigilon 12/24V 8-Door Smart Hub
  - Avigilon 24V Elevator Smart Hub
  - Access Control Core
- Whether you're supporting a legacy access control panel for mobile gateway. See Wiring to legacy panels and mobile gateway on page 40.

Specifications

Openpath Access Control Core Datasheet

Openpath 4-Port Board Datasheet

Openpath 8-Port Board Datasheet

Openpath 16 I/O Elevator Board Datasheet

Openpath 24V 4 Door Smart Hub Datasheet

Openpath 12/24V 4-Door Smart Hub Datasheet

Openpath 12/24V 8-Door Smart Hub Datasheet

Openpath 24V Elevator Smart Hub Datasheet

Openpath Video Reader Pro Datasheet

Openpath Avigilon Video Intercom Reader Pro Datasheet

Openpath Smart Reader Datasheet

Openpath Embedded USB Smart Reader Datasheet

Openpath First Gen Smart Hub Datasheet

Avigilon Alta Control Center Administrator Guide

LifeSafety Power® FPV Installation Guide

LifeSafety Power B100 Installation Guide

LifeSafety Power C4/C8 Installation Guide

For additional product and support documentation, see help.openpath.com.

Installation

Note: The Avigilon Pro series readers (Avigilon Video Reader Pro and Avigilon Video Intercom Reader Pro) do not require the Avigilon ACU.

Network requirements

An Ethernet connection with DHCP must be used to connect the ACU to the Local Area Network (LAN). You also need to configure firewall settings to communicate with the Avigilon Alta access control system, which uses the following outbound ports:

- TCP port 443
- UDP port 123

Note: If using an external DNS server, the outbound UDP port 53 must also be open.

To support Wi-Fi unlocking from the mobile app, the inbound TCP port 443 of the ACU must be available from within the LAN. Inbound port forwarding on the router, firewall, or NAT device is not required.

The Single Door Controller also supports Wi-Fi connections. Refer to Network settings on page 55.

Selecting a backup battery

While not required, a backup battery is recommended in case of power outages. The size of battery depends on your setup and how long you want to power the system.

Table 1 Power requirements for Core Series Smart Hubs (24V)

Access Control Core	0.4A
4-Port Board	0.3A
Avigilon Standard Smart Reader Avigilon Mullion Smart Reader Embedded USB Smart Reader	0.14A
Locking hardware (while engaged)	0.12A--0.25A

Assuming a 24V power supply, a Core Series Smart Hub configured with four Avigilon readers and locking hardware uses about 2 Amps. To keep the system running for 3 hours with all entries engaged, you need 2A x 3 hours = 6AH, so two 12V 6AH sealed lead acid (SLA) or gel cell batteries wired in series.

Mounting instructions

Avigilon Smart Hubs use LifeSafety Power E1 and E2 enclosures. Core Series Smart Hubs are shipped with power supplies pre-installed, but Avigilon boards must be installed separately.

Mount the enclosure to the wall

1. (Optional) Remove the enclosure cover.
2. Locate the top keyhole mounting holes in the back of the enclosure.
3. Mark and pre-drill the locations for the keyholes in the mounting surface.
4. Partially install two fasteners appropriate for the surface on which the enclosure is being installed. Leave the heads of the fasteners approximately ¼" out from the surface. Minimum fastener size should be #10 or larger.
5. Hang the enclosure on the two fasteners and mark the locations of the remaining mounting holes.
6. Remove the enclosure and pre-drill the locations for the remaining mounting holes.
7. Re-hang the enclosure on the top mounting fasteners, install the remaining fasteners, and tighten all fasteners.
8. Reinstall the enclosure's cover, if removed in step 1.

Install the Core Series board in E1 enclosure

1. Mount the 4-Port Board (a) in the upper-corner of the enclosure by snapping board standoffs into the holes in the back of the enclosure.
2. Mount the Access Control Core (b) below the 4-Port Board, perpendicular to the back of the enclosure, by hooking tabs into the holes in the back of the enclosure.
3. Mount the Avigilon 16 I/O Elevator Board (c) (if included) below the Access Control Core using 6-32 screws (insert screws from back of enclosure) with the USB port (d) on the left.
4. Connect the Access Control Core to the 4-Port Board with the included USB cable. Connect the Access Control Core to the Avigilon 16 I/O Elevator Board with the additional USB cable.

> **Note:** The maximum recommended USB cable length is 6 feet (2 meters) or 10 feet (3 meters) if high quality, shielded cable.

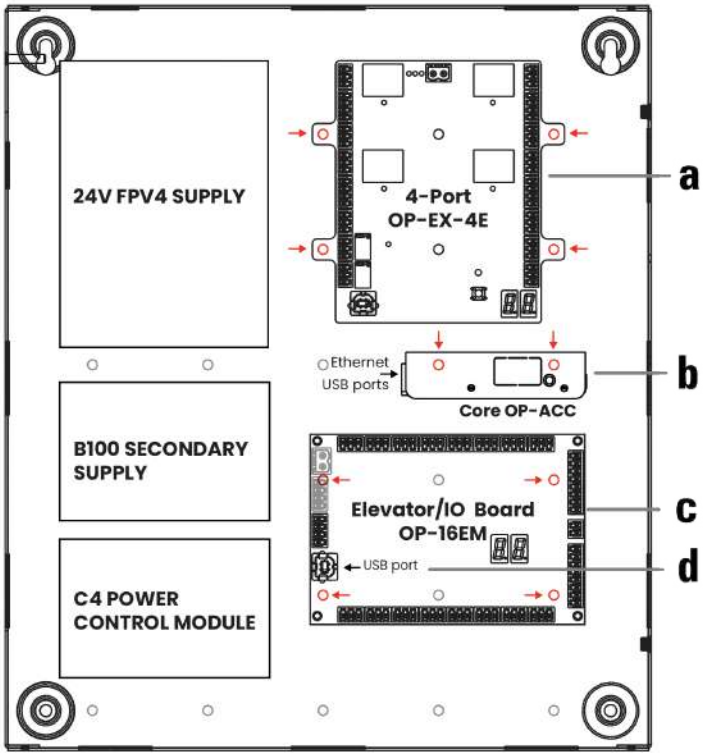

Figure 1 E1 board placement includes a 24V FPV4 supply, B100 secondary supply, and C4 power control module

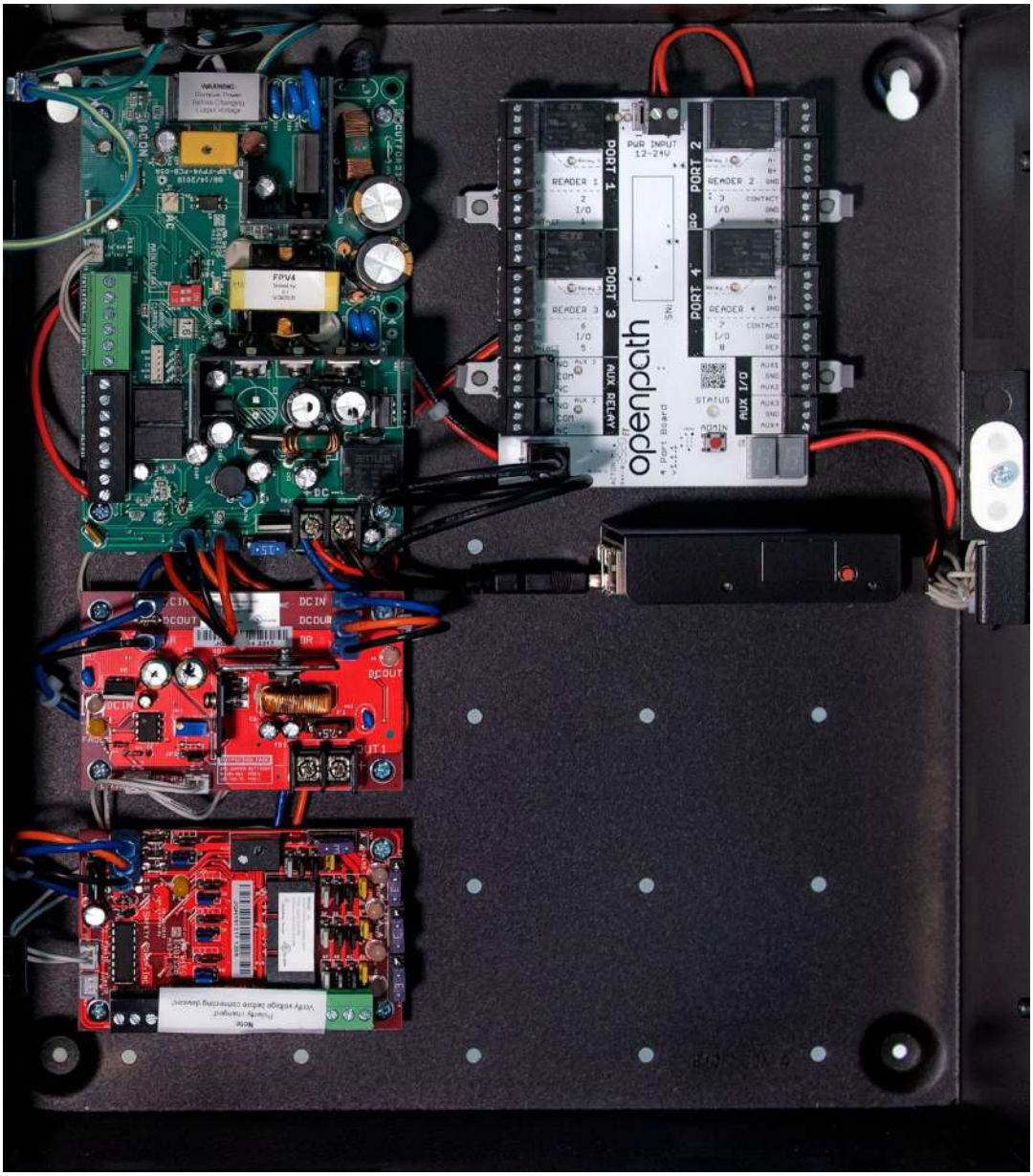

Figure 2 4ENT-SYS-1224V board placement

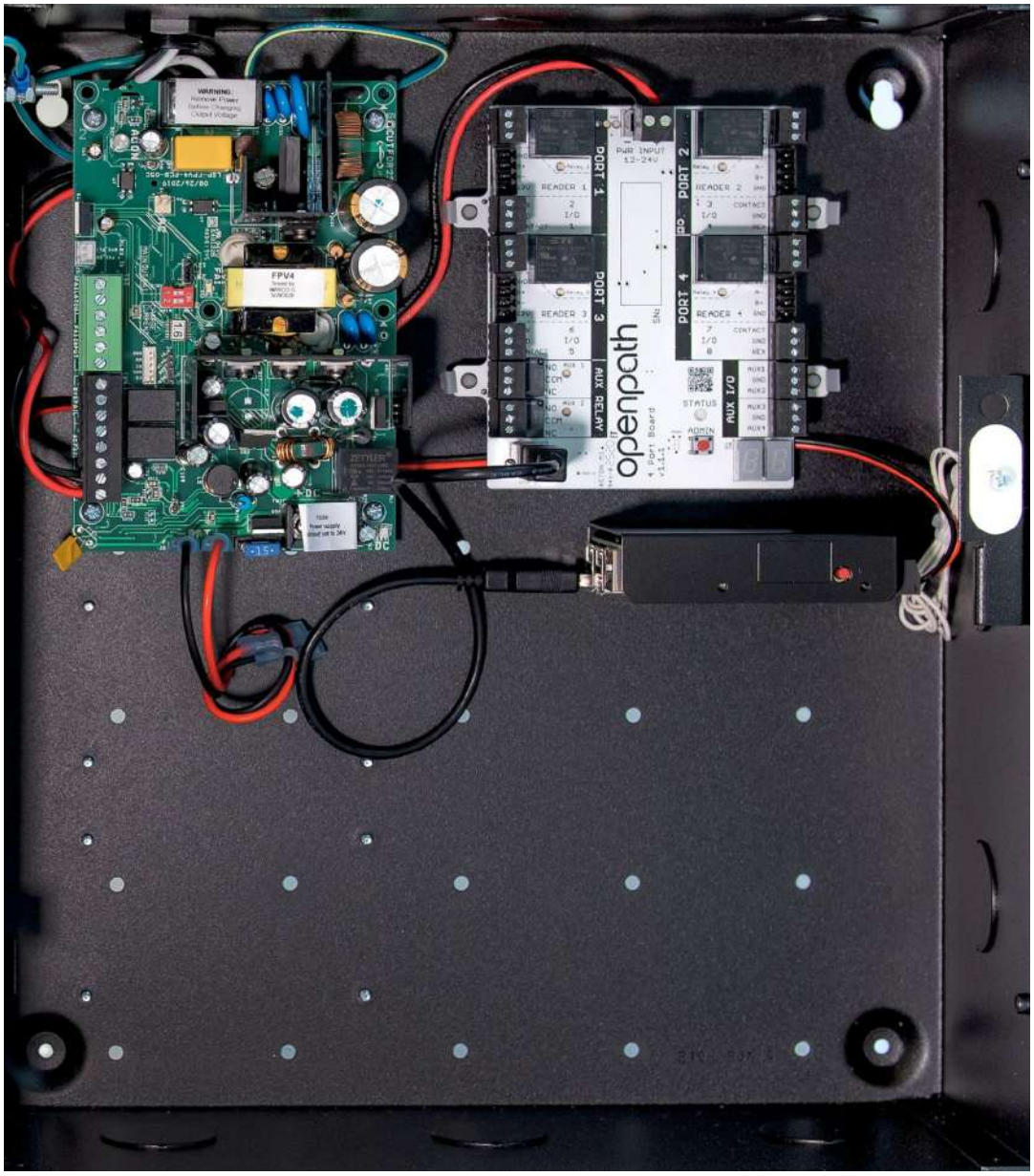

Figure 3 4ENT-SYS-24V board placement

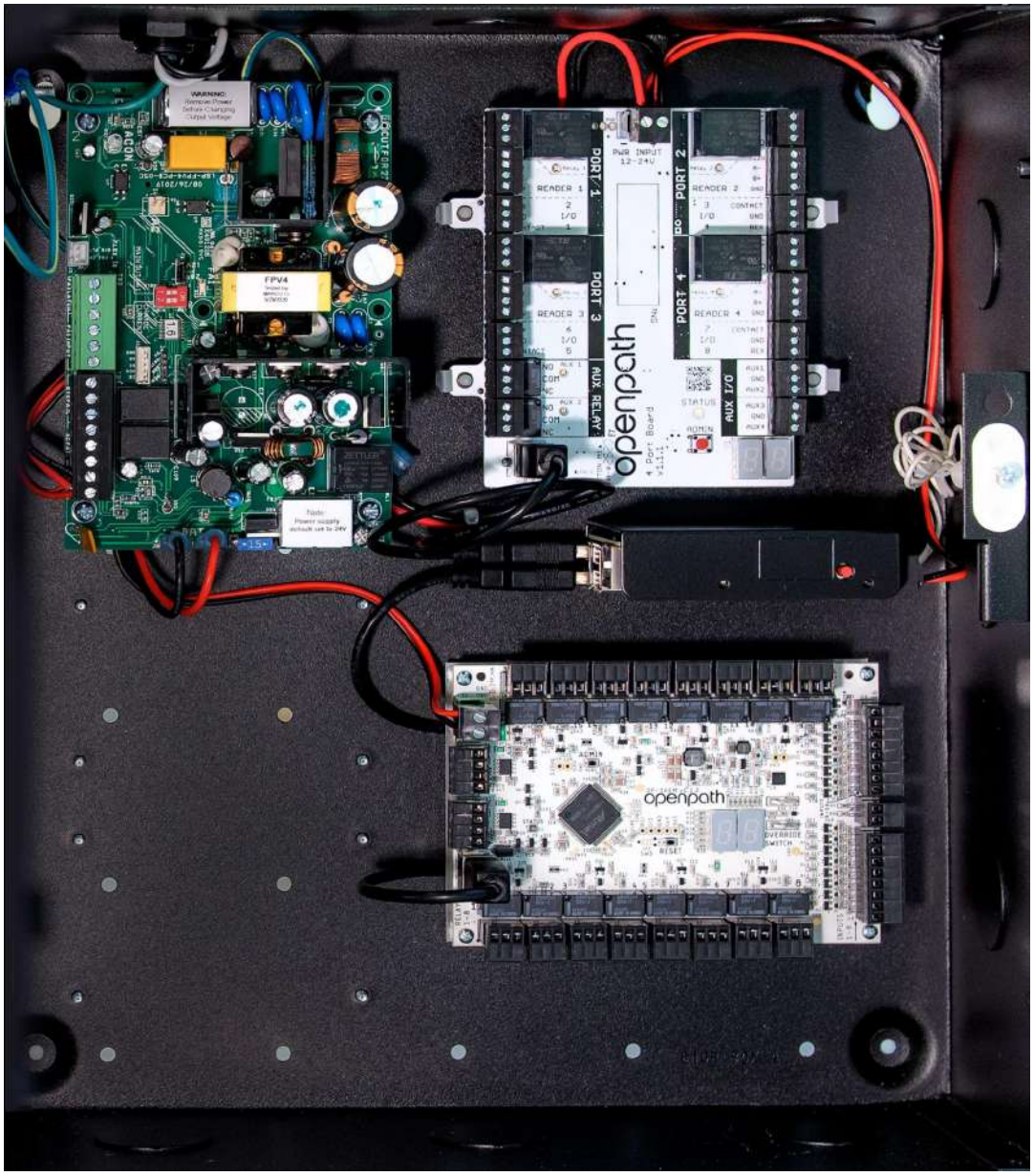

Figure 4 20ENT-SYS-24V board placement

Install the Core Series board in E2 enclosure

1. Mount the 8-Port Board (a) in the upper-right corner of the enclosure by snapping board standoffs into the holes in the back of the enclosure.
2. Mount the Access Control Core (c) with the USB and Ethernet ports (b) facing up as shown in the diagram, and hook the tabs on into the holes in the enclosure and slide to the left to lock in place.
3. Connect the Access Control Core to the 8-Port Board with the included USB cable.

> **Note:** The maximum recommended USB cable length is 6 feet (2 meters) or 10 feet (3 meters) if high quality, shielded cable.

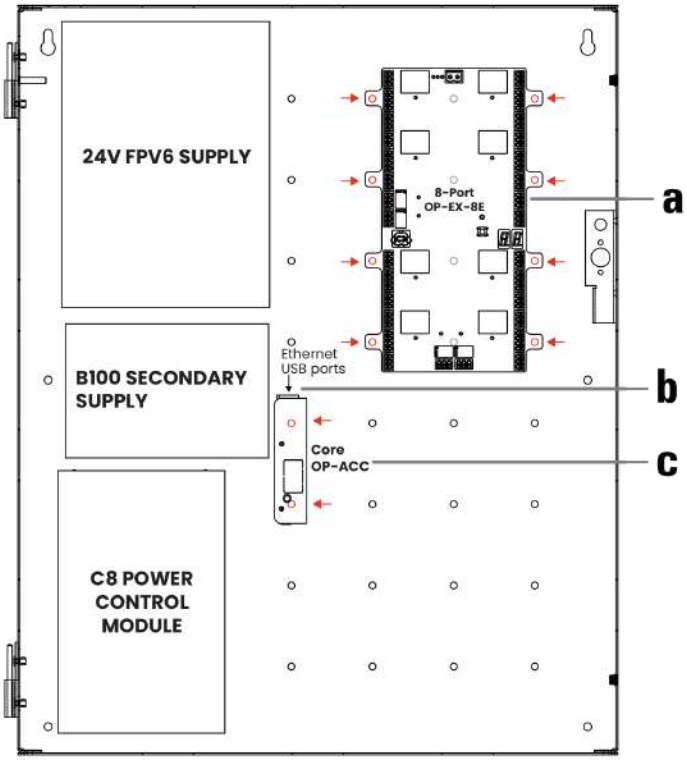

Figure 5 E2 board placement includes a 24V FPV6 supply, B100 secondary supply, and C8 power control module

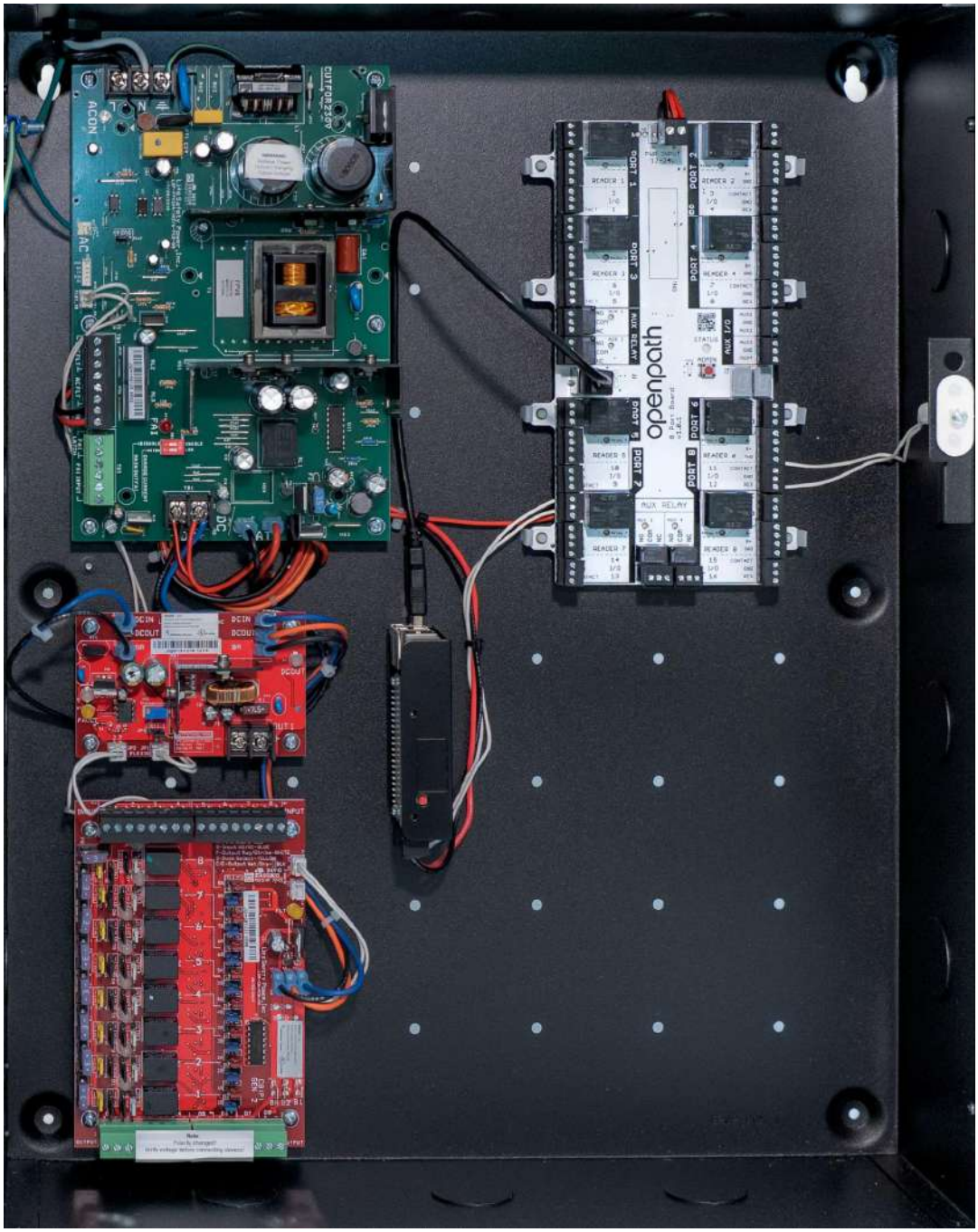

Figure 6 20ENT-SYS-24V Board Placement

Reader wiring

Avigilon readers and ACUs communicate via RS-485. The compatible wire types are listed in order of preference which impacts distance.

- **Shielded CAT6A** (recommended, extra two pairs can be used for sensors)
- Shielded CAT6
- Shielded RS485 w/22-24AWG (lower gauge, thicker wire is better)
- Shielded CAT5
- Unshielded CAT6
- Unshielded CAT5
- Shielded 22/6
- Unshielded 22/6

Note: Use one twisted pair for GND and VIN (power) and one twisted pair for +B and -A (data).

ACU and Wiegand reader wiring

Table 2 Connections from Avigilon ACU to Avigilon reader

Pigtail color	Short name	Full name
Gray	GND	Ground (RTN)
Blue	+B	RS485-B
Violet	-A	RS485-A
Orange	VIN	+12V IN

Table 3 Connections to third-party Wiegand reader (optional)

Pigtail color	Short name	Full name
Red	VO	Wiegand Voltage
Black	GND	Wiegand RTN
Green	WD0	Wiegand Data 0
White	WD1	Wiegand Data 1
Brown	LED	Wiegand LED
Yellow	BUZZER	Wiegand Buzzer

Temperature must not exceed -22°F to 140°F (-30°C to 60°C).

Recommended maximum cable length: 300 ft (91 m) with CAT6 or 500 ft (152 m) if two wire pairs are used for GND and VIN (power).

For shielded wiring: Connect one side of the drain wire (the shield around the wires) to the GND terminal on the ACU. Both the shield and the GND wire can share the same GND terminal. Do not connect the other side of the shield to anything.

For standard reader installation: We recommend that you install a 1-Gang 20 CU box in order to flush-mount the reader. Alternatively, the reader may also be surface mounted with the included back plate.

> **Note:** For elevators, all relays and readers must be connected to the same ACU. If you need more than four access controlled floors or readers, add the Avigilon 16 I/O Elevator Board.

> **Warning:** Always remove power from the ACU and locking hardware when wiring readers and other devices. Failure to do so can damage the ACU.

Install Smart Reader v2

Standard Reader

The Smart Reader v2 (OP-R2X-STND) can be flush mounted in a single gang box or surface mounted using the provided bracket.

Flush mount (recommended)

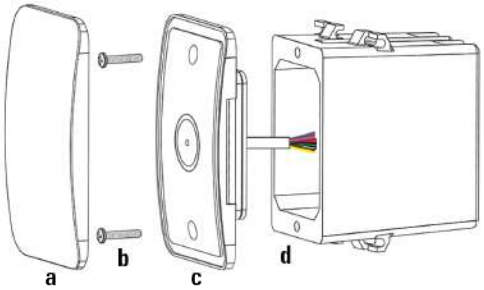

1. Install a recessed single gang box (d) into the wall.
2. Strip and connect the wires.
3. Use the provided screws (b) to attach the reader (c) to the wall. Do not use the provided surface mount bracket for flush mount installations.
4. Snap on the front cover (a).

Surface mount

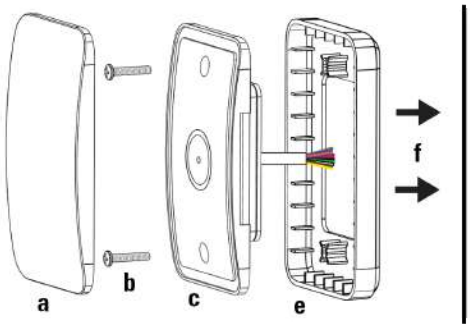

Note: The flat side of the surface mount bracket must face the wall. No adhesives are necessary.

1. Place the reader (c) inside the surface mount bracket (e).
2. Strip and connect the wires.
3. Use wall anchors and the appropriate screws (not included) to attach the reader (c and e) to the wall.
4. Snap on the front cover (a).

Note: Do not use adhesive.

Mullion Reader

The Avigilon Mullion Smart Reader (OP-R2X-MULL) can be surface mounted where space is limited.

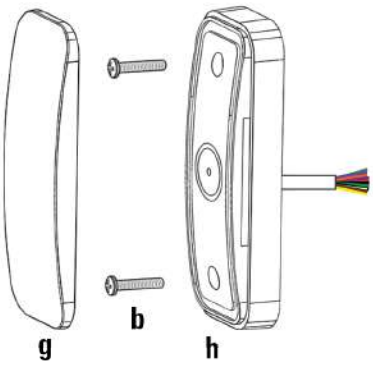

Surface mount

1. Strip and connect the wires.
2. If installing on a metal surface, drill and tap to use the provided screws (b). Or, use self-tapping screws (not included). Attach the reader (g) to the wall (f).
3. Snap on the front cover (g).

Note: Do not use adhesive.

Install Smart Keypad Reader

Standard Keypad Reader

The Smart Keypad Reader (OP-RKP-STND) can be flush mounted in a single gang box or surface mounted using the provided surface mount bracket.

Flush mount

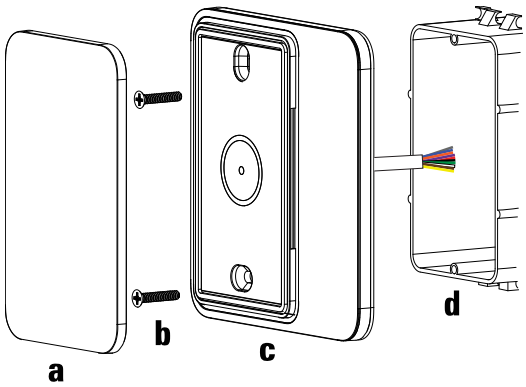

1. Install a recessed single gang box (d) into the wall.
2. Strip and connect the wires.
3. Use the provided screws (b) to attach the reader (c) to the wall. Do not use the provided surface mount bracket for flush mount installations.
4. Snap on the front cover (a).

Note: Do not use adhesive.

Surface mount

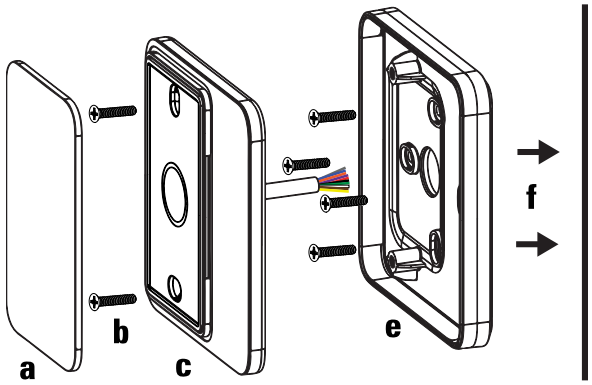

1. Attach the surface mount bracket (e) to the wall (f) using one of these options:

   Drywall: Use wall anchors and suitable screws. **UK single gang box**: Use four machine screws (not incl). **EU single gang box**: Use two machine screws (not included) in the top and bottom holes.

2. Strip and connect the wires.
3. Use the provided #8-32 screws (b) to attach the reader (c) to the surface mount bracket (e).
4. Snap on the front cover (a).

Note: Do not use adhesive.

Mullion Keypad Reader

The Avigilon Mullion Smart Reader (OP-RKP-MULL) can be surface mounted where space is limited.

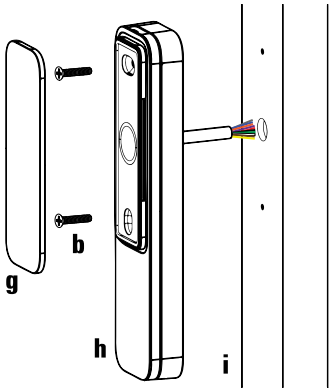

1. Strip and connect the wires.
2. If installing on a metal surface, drill and tap to use the provided screws (b). Or, use self-tapping screws. Attach the reader (h) to the wall (i).
3. Snap on the front cover (g).

Note: Do not use adhesive.

Install Embedded USB Smart Reader

The Embedded Reader (OP-R2X-EMBD) can be flush mounted in a US gang box; installed within kiosks, turnstiles, parking systems, or other enclosures using the mounting holes; or mounted behind panels using adhesive.

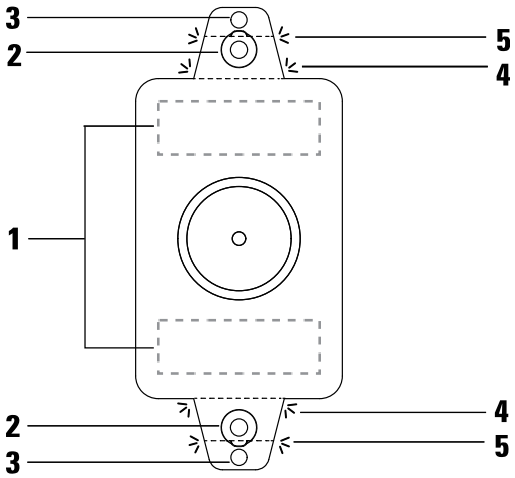

1	Mounting strips
2	Mounting holes for single gang box
3	Outer mounting holes

4	Inner breakaway tabs for mounting using adhesive
5	Outer breakaway tabs for US gang box installation

Note: Remove tabs carefully using pliers.

Flush mount

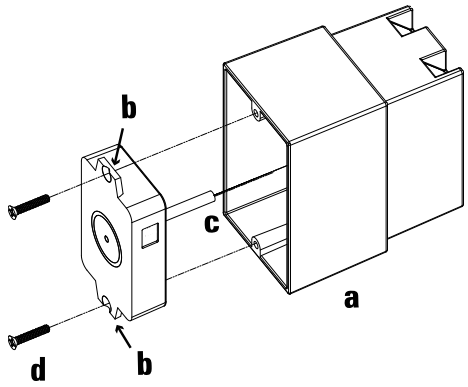

1. Install a recessed single gang box (a) into the wall.
2. Snap off the outer breakaway tabs (b) on the reader.
3. Strip and connect the wires (c) into the terminal block.
4. Use the provided screws (d) to attach the reader to the wall.

Desktop mount

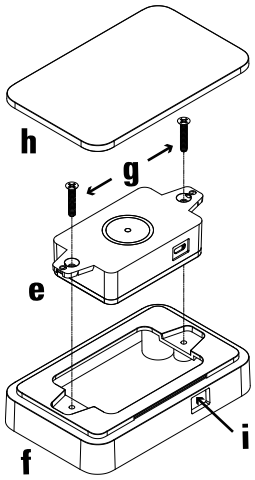

1. Install the reader (e) within the desktop mount bracket (f) (sold separately) with the provided screws (g).
2. Snap on the front cover (h).
3. Connect the reader to the host using the USB cable (i) provided with the desktop mount bracket.

   Connector type: USB 2.0 Micro B

Wiring

Avigilon readers and ACUs communicate via RS-485. The compatible wire types are listed in order of preference which impacts distance.

- **Shielded CAT6A** (recommended, extra two pairs can be used for sensors)
- Shielded CAT6
- Shielded RS485 w/22-24AWG (lower gauge, thicker wire is better)
- Shielded CAT5
- Unshielded CAT6
- Unshielded CAT5
- Shielded 22/6
- Unshielded 22/6

Note: Use one twisted pair for GND and VIN (power) and one twisted pair for +B and -A (data).

Connector type	Description
USB 2.0 Micro B	Connect to host over USB for keyboard emulation

Table 4 Connections from Avigilon ACU to Avigilon Embedded reader

Short name	Full name
GND	Ground (RTN)
+B	RS485-B
-A	RS485-A
VIN	+12V IN

Table 5 Connections to third-party Wiegand reader (optional)

Short name	Full name
VO	Wiegand Voltage
GND	Wiegand RTN
WD0	Wiegand Data 0
WD1	Wiegand Data 1
LED	Wiegand LED
BUZZER	Wiegand Buzzer

Temperature must not exceed -22°F to 140°F (-30°C to 60°C).

Install Avigilon Video Reader Pro

The Avigilon Video Reader Pro combines a built-in high-resolution camera with the form factor of a mullion door reader. The video readers are powered using PoE and do not need to wire back to an Openpath ACU. However, you must use an ACU or third-party panel to support locking hardware.

Specifications

For the Avigilon Video Reader Pro specifications and dimensions, see the OP-VID-PRO-RDR datasheet[1].

Prerequisites

Create the video reader in the Control Center prior to installing and provisioning. For more information, see the Avigilon Alta Control Center Administrator Guide. See also Network security best practices on page 28.

To install the Mobile Gateway option, see the Installation article[2].

Installation

You can install the Video Reader Pro on a narrow surface using the mullion mount or on a single gang box using the standard mount.

Install the Avigilon Video Reader Pro on the mullion mount

1. Use the provided screws (A) to attach the mounting plate (B) to the wall.
2. Place the cradle bracket (C) on the mounting plate, angle as desired, then secure with the provided screws (D).
3. Strip and connect the wires if necessary, then provision the device.
4. Snap in the reader (E), then secure with the security set screw (F).

> **Note:** Do not use adhesive.

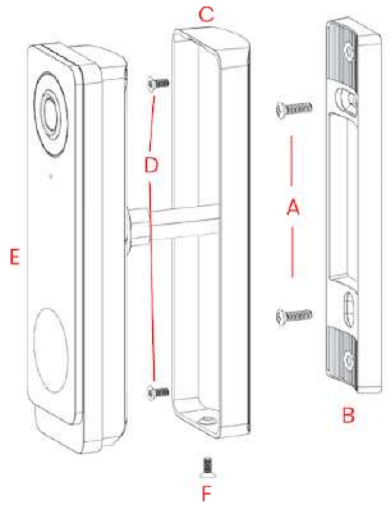

Figure 7 Installing the Video Reader Pro on the mullion mount

[1]For more information, see: https://assets.openpath.com/files/preview/6155763e30faae001a7004c3

[2]For more information, see: https://openpath.atlassian.net/wiki/spaces/EHC/pages/1880948747/Wiring+to+Legacy+Panels+and+Mobile+Gateway

Install the Avigilon Video Reader Pro on the standard mount

1. Install a recessed single gang box into the wall.
2. Use the provided screws (A) to attach the mounting plate (B) to the wall.
3. Place the cradle bracket (C) on the mounting plate, angle as desired, then secure with the provided screws (D).
4. Strip and connect the wires, then provision the device.
5. Snap in the reader (E), then secure with the security set screw.

> **Note:** Do not use adhesive.

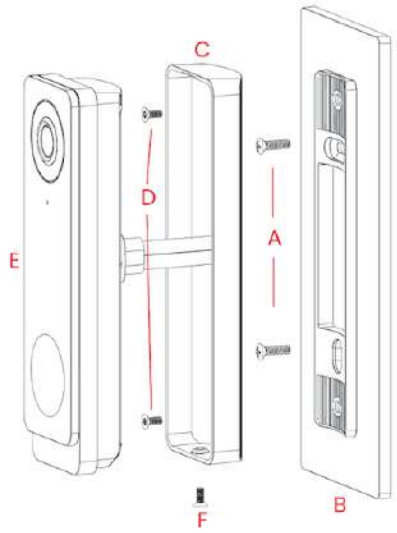

Figure 8 Installing the Video Reader Pro on the standard mount

Avigilon Video Reader Pro wiring

Table 6 Avigilon Video Reader Pro pigtail description

Pigtail color	Short name	Full name	Connection
Ethernet	-	RJ-45 connector	Avigilon cloud
Black	GND	Wiegand RTN	Third-party controller
Green	WD0	Wiegand Data 0	Third-party controller
White	WD1	Wiegand Data 1	Third-party controller
Blue and white stripe	NO	Relay Normally Open*	Third-party sensor
Orange and white stripe	COM	Relay Common*	Third-party sensor
Green and yellow stripe	GND	Ground (RTN)*	Third-party sensor

*Relay not rated for locking hardware. To power locking hardware, use an Avigilon Smart Hub or third-party access control panel.

1. Using the provided weatherproof coupling, connect the RJ-45 jack to an Ethernet cable or PoE injector.
2. (Optional) Use the Blue and White (NO) stripe wire, and Orange and White (COM) stripe wire, to connect to a third-party device like a REX or sounder.
3. (Optional) If connecting to a legacy access control system, connect the Green (WD0) and White (WD1) wires to an input on the legacy panel.

> **Note:** This step is required if setting up a Standalone Mode Video Reader. Refer to How to set up a Standalone Mode Video Reader Pro[1] for more information.

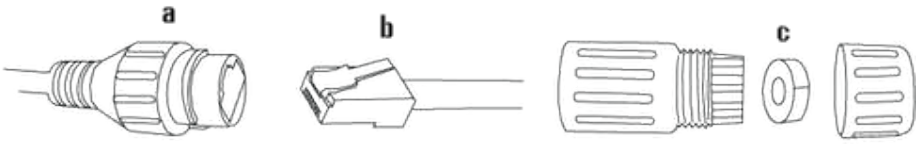

Figure 9 Weatherproof coupling diagram of an RJ45 jack on Video Reader Pro (a), Ethernet cable (b), and waterproof RJ45 coupling (c)

Power up the Avigilon Video Reader Pro

1. Connect the Avigilon Video Reader Pro to a PoE injector or PoE-powered switch.
2. Power on the Avigilon Video Reader Pro.

Provision the Avigilon Video Reader Pro

> **Note:** You must first create a Video Reader Pro in the Control Center before provisioning.

Use the Open Admin App

1. Open the Admin app.
2. Search for org name.
3. Press Admin button (Figure 10 on the next page) on back of Video Reader Pro.

> **Note:** Remove the back cradle to expose the Admin button.

4. Tap the serial number of Video Reader Pro in Admin app.
5. Tap **Provision Device** in the Admin app and follow in-app instructions.

Use the Control Center

1. Go to control.openpath.com/login and sign in. To access the European Control Center, go to control.eu.openpath.com/login.
2. Go to **Devices** > **Video readers**.
3. Press Admin button (Figure 10 on the next page) on back of Video Reader Pro.
4. In the Control Center, click the Register button.

[1]See: https://help.openpath.com/how-to-set-up-a-standalone-mode-video-reader-pro-Sy7wcDjc5

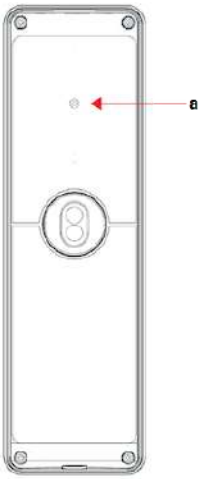

Figure 10 Admin button (a) on the back of Avigilon Video Reader Pro

For next steps, return to the Control Center to view the activated device.

Network security best practices

PoE access control readers, such as the Avigilon Video Reader Pro and Avigilon Video Intercom Reader Pro, require a wired network connection installed on the unsecured side of a door.

Important: To remove the risk of an attacker gaining access to the local network via the network connection, assuming they can remove the reader from the wall, Avigilon Alta recommends that your IT team place the exposed Ethernet port on a demilitarized zone (DMZ) or perimeter network.

Install Avigilon Video Intercom Reader Pro

The Avigilon Video Intercom Reader Pro combines a built-in high-resolution camera, intercom with intelligent voice interface, and multi-technology reader into a sleek form factor.

System overview

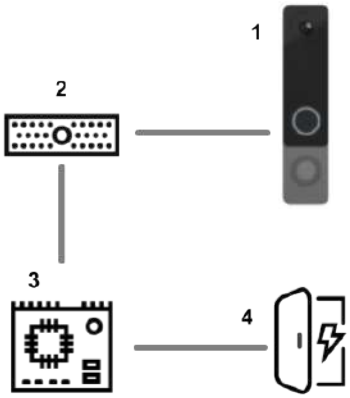

No.	Description
1	Avigilon Video Intercom Reader Pro is powered using PoE and does not need to be wired to an Avigilon ACU. However, you must use an ACU or third-party panel to support locking hardware. The device must be connected to the same local network as the ACU, control panel, or door controller that controls it.
2	PoE-powered network switch or Avigilon PoE injector
3	Avigilon ACU, legacy panel, or door controller that unlocks the door
4	Door strike

For the Gateway Mode wiring setup (not shown in the diagram), see Appendix A: Configuring Avigilon Alta Control Center with Legacy Systems in the Avigilon Alta Control Center Administrator Guide.

Specifications

For the Avigilon Video Intercom Reader Pro specifications and dimensions, see the OP-VID-PRO-INT datasheet[1].

Note: Higher network bandwidth is recommended for the best performance in video and audio streaming.

[1]For more information, see: https://assets.openpath.com/files/preview/62278bc2c59836c210de666e

Prerequisites

Create the Avigilon Video Intercom Reader Pro in the Control Center before installing and provisioning. For more information, see the Avigilon Alta Control Center Administrator Guide. See also Network security best practices on page 28. To install the Mobile Gateway option, see the Installation article[1].

> **Note:** You get 5 free Avigilon Video Intercom Reader Pro user licenses per org.

Installation

You can install the Avigilon Video Intercom Reader Pro on a narrow surface using the mullion mount or on a single gang box using the standard mount.

Install the Avigilon Video Intercom Reader Pro on the mullion mount

1. Use the provided screws (A) to attach the mounting plate (B) to the wall.
2. Place the cradle bracket (C) on the mounting plate, angle as desired, then secure with the provided screws (D).
3. Strip and connect the wires if necessary, then provision the device.
4. Snap in the reader (E), then secure with the security set screw (F).

> **Note:** Do not use adhesive.

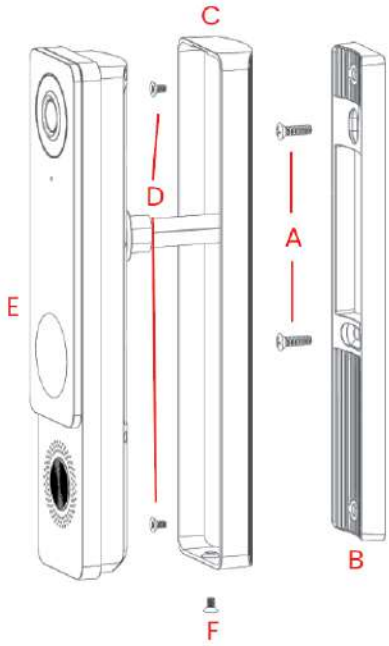

Figure 1 Installing the Avigilon Video Intercom Reader Pro on the mullion mount

[1]For more information, see: https://openpath.atlassian.net/wiki/spaces/EHC/pages/1880948747/Wiring+to+Legacy+Panels+and+Mobile+Gateway

Install the Avigilon Video Intercom Reader Pro on the standard mount

1. Install a recessed single gang box into the wall.
2. Use the provided screws (A) to attach the mounting plate (B) to the wall.
3. Place the cradle bracket (C) on the mounting plate, angle as desired, then secure with the provided screws (D).
4. Strip and connect the wires, then provision the device.
5. Snap in the reader (E), then secure with the security set screw.

> **Note:** Do not use adhesive.

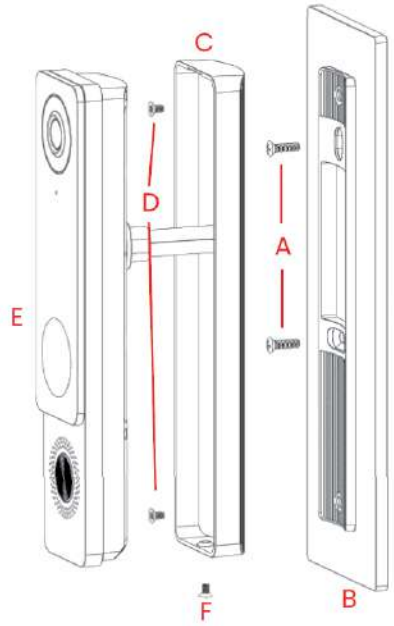

Figure 2 Installing the Video Intercom Reader Pro on the standard mount

Wiring the Avigilon Video Intercom Reader Pro

Table 1 Avigilon Video Intercom Reader Pro pigtail description

Pigtail color	Short name	Full name	Connection
Ethernet	-	RJ-45 connector	Avigilon cloud
Black	GND	Wiegand RTN	Third-party controller
Green	WD0	Wiegand Data 0	Third-party controller
White	WD1	Wiegand Data 1	Third-party controller
Blue and white stripe	NO	Relay Normally Open*	Third-party sensor
Orange and white stripe	COM	Relay Common*	Third-party sensor
Green and yellow stripe	GND	Ground (RTN)*	Third-party sensor

*Relay not rated for locking hardware. To power locking hardware, use an Avigilon Smart Hub or third-party access control panel.

1. Using the provided weatherproof coupling, connect the RJ-45 jack to an Ethernet cable or PoE injector (see Weatherproof coupling diagram of an RJ45 jack on Video Reader Pro (a), Ethernet cable (b), and waterproof RJ45 coupling (c) below).
2. (Optional) Use the Blue/White (NO) and Orange/White (COM) stripe wires to connect to a third-party device like a REX or sounder.
3. (Optional) If connecting to a legacy access control system, connect the Green (WD0) and White (WD1) wires to an input on the legacy panel.

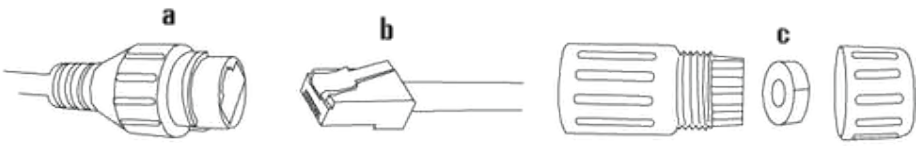

Figure 3 Weatherproof coupling diagram of an RJ45 jack on Video Reader Pro (a), Ethernet cable (b), and waterproof RJ45 coupling (c)

Power the Avigilon Video Intercom Reader Pro

1. Connect the Avigilon Video Intercom Reader Pro to a PoE injector or PoE-powered switch.
2. Power on the Avigilon Video Intercom Reader Pro.

Provision the Avigilon Video Intercom Reader Pro

Note: You must first create an Avigilon Video Intercom Reader Pro in the Control Center before provisioning. For more information, see *Add a Video Intercom Reader Pro* in the Avigilon Alta Control Center Administrator Guide.

Use the Open Admin App

1. Open the Admin app.
2. Search for org name.
3. Press Admin button (Figure 4 on the next page) on the back of the Avigilon Video Intercom Reader Pro.

   Note: Remove the back cradle to expose the Admin button.

4. Tap the serial number of Avigilon Video Intercom Reader Pro in Admin app.
5. Tap **Provision Device** in the Admin app and follow in-app instructions.

Use the Control Center

1. Go to control.openpath.com/login and sign in. To access the European Control Center, go to control.eu.openpath.com/login.
2. Go to **Devices** > **Video intercom readers**.
3. Press Admin button (Figure 4 on the next page) on back of the Avigilon Video Intercom Reader Pro.
4. In the Control Center, click the Register button.

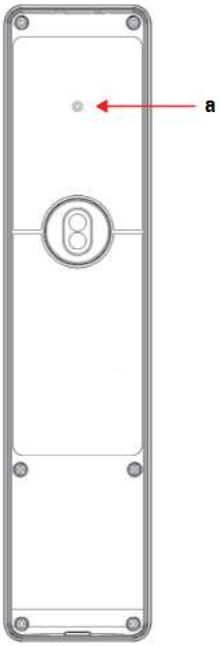

Figure 4 Admin button (a) on the back of Avigilon Video Reader Pro

For next steps, return to the Control Center to view the activated device.

Standard configurations

Wiring Core Series 24V 4 Door Smart Hubs

The Core Series 24V 4 Door Smart Hub (4ENT-SYS-24V) uses the LifeSafety Power® FPV4[1] to power the Access Control Core and 4-Port Board.

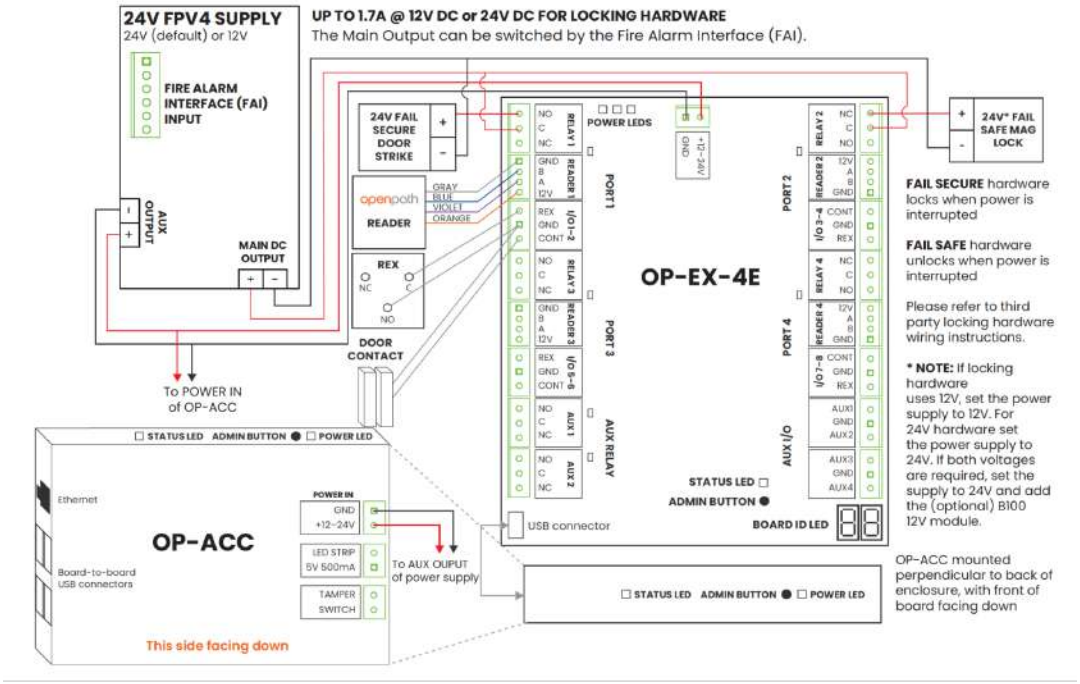

Figure 5 4ENT-SYS-24V wiring diagram

Wiring Core Series 12/24V 4-Door Smart Hubs

The Core Series 12/24V 4 Door Smart Hub (4ENT-SYS-1224V) uses the LifeSafety Power FPV4[2] to power the Access Control Core and 4-Port Board; a LifeSafety Power B100[3] secondary power supply; and the LifeSafety Power C4 Control Module[4] to power 12-24V locking hardware.

[1]For more information, see https://www.lifesafetypower.com/docs/im_fpv-standard.pdf.

[2]For more information, see https://www.lifesafetypower.com/docs/im_fpv-standard.pdf.

[3]For more information, see https://lifesafetypower.com/docs/im_b100.pdf.

[4]For more information, see https://lifesafetypower.com/docs/im_c4c8.pdf.

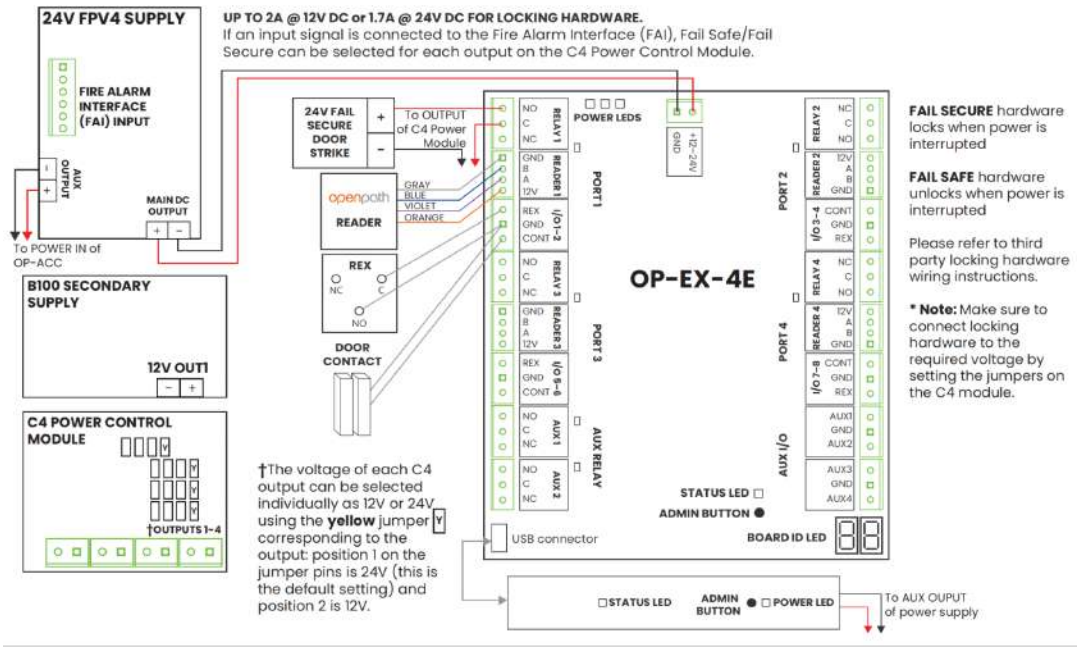

Figure 6 4ENT-SYS-1224V Wiring Diagram

Wiring Core Series 24V Elevator Smart Hubs

The Core Series 24V Elevator Smart Hub (20ENT-SYS-24V) uses the LifeSafety Power FPV4[1] to power the Access Control Core, 4-Port Board, and Avigilon 16 I/O Elevator Board.

[1]For more information, see https://www.lifesafetypower.com/docs/im_fpv-standard.pdf.

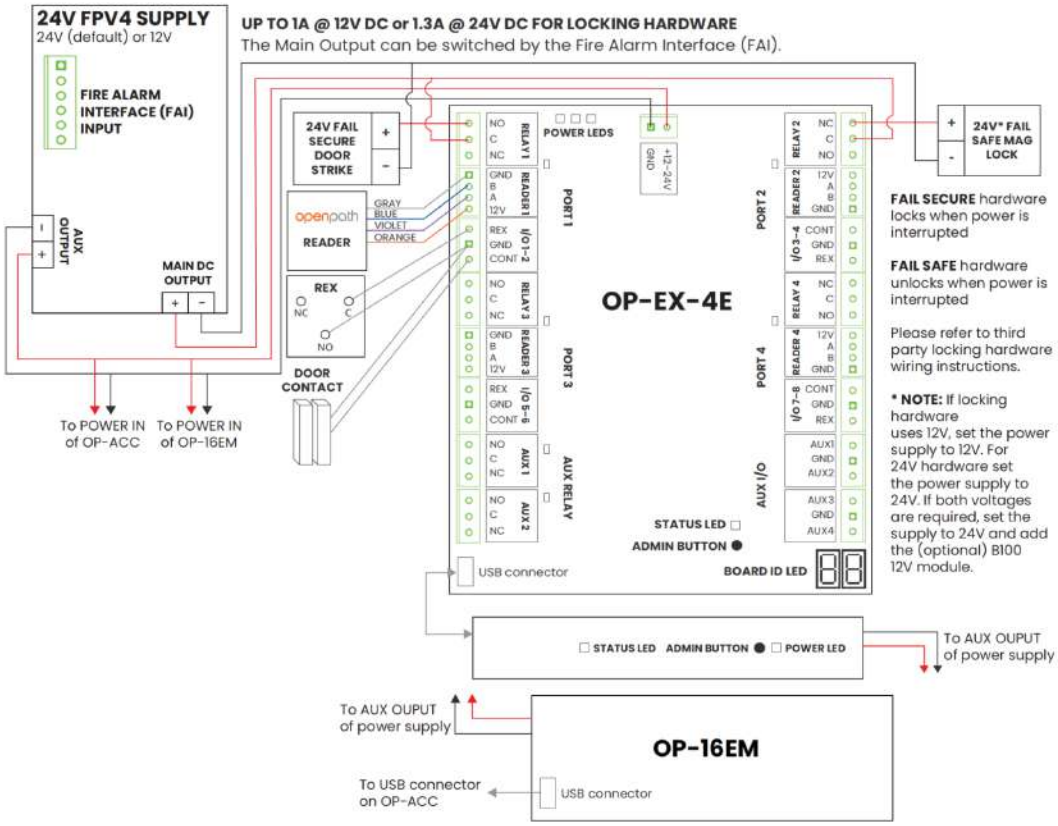

Figure 7 20ENT-SYS-24V Wiring Diagram

ELEVATOR BUTTON WIRING

Interrupt one of the signal wires from each button and run through the C and NC contacts for the corresponding relay on the Avigilon 16 I/O Elevator Board.

GENERAL PURPOSE INPUTS

The general purpose inputs respond to voltages between 3V and 24V. The inputs will not respond directly to a switch or relay connection to ground. To use these inputs with a switch or relay, connect one side of the switch to the input and the other side of the switch to a supply voltage between 3V and 24V. If desired, you can add a 1k ohm resistor in series with the switch.

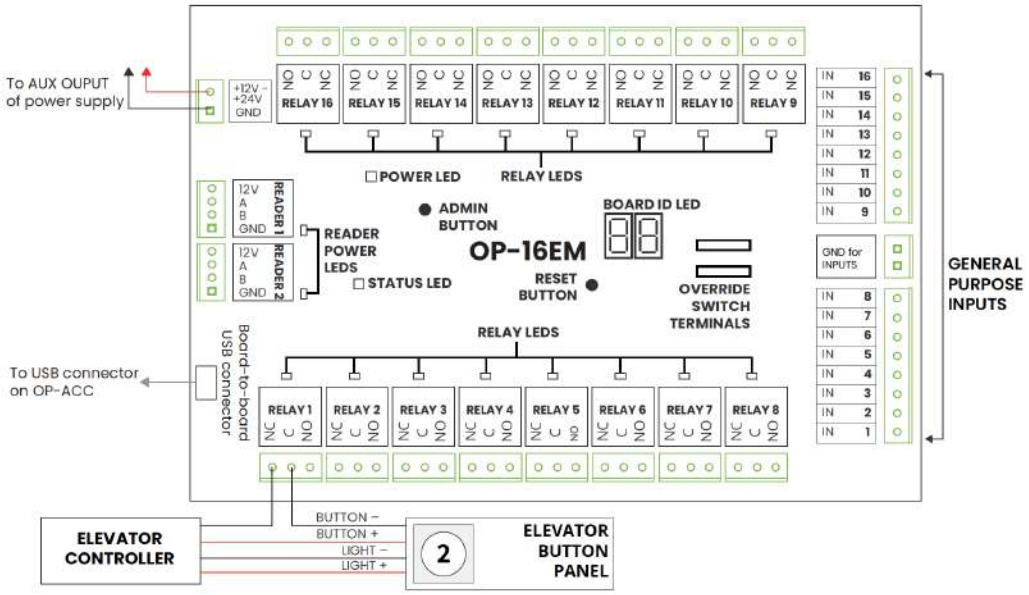

Figure 8 Elevator button wiring

Wiring Core Series12/24V 8-Door Smart Hubs

The Core Series 12/24V 8-Door Smart Hub (8ENT-SYS-1224V) uses the LifeSafety Power FPV6[1] to power the Access Control Core and 8-Port Board; a LifeSafety Power B100[2] secondary power supply; and the LifeSafety Power C8 Control Module[3] to power 12-24V locking hardware.

[1]For more information, see https://www.lifesafetypower.com/docs/im_fpv-standard.pdf.

[2]For more information, see https://www.lifesafetypower.com/docs/im_b100.pdf.

[3]For more information, see https://lifesafetypower.com/docs/im_c4c8.pdf.

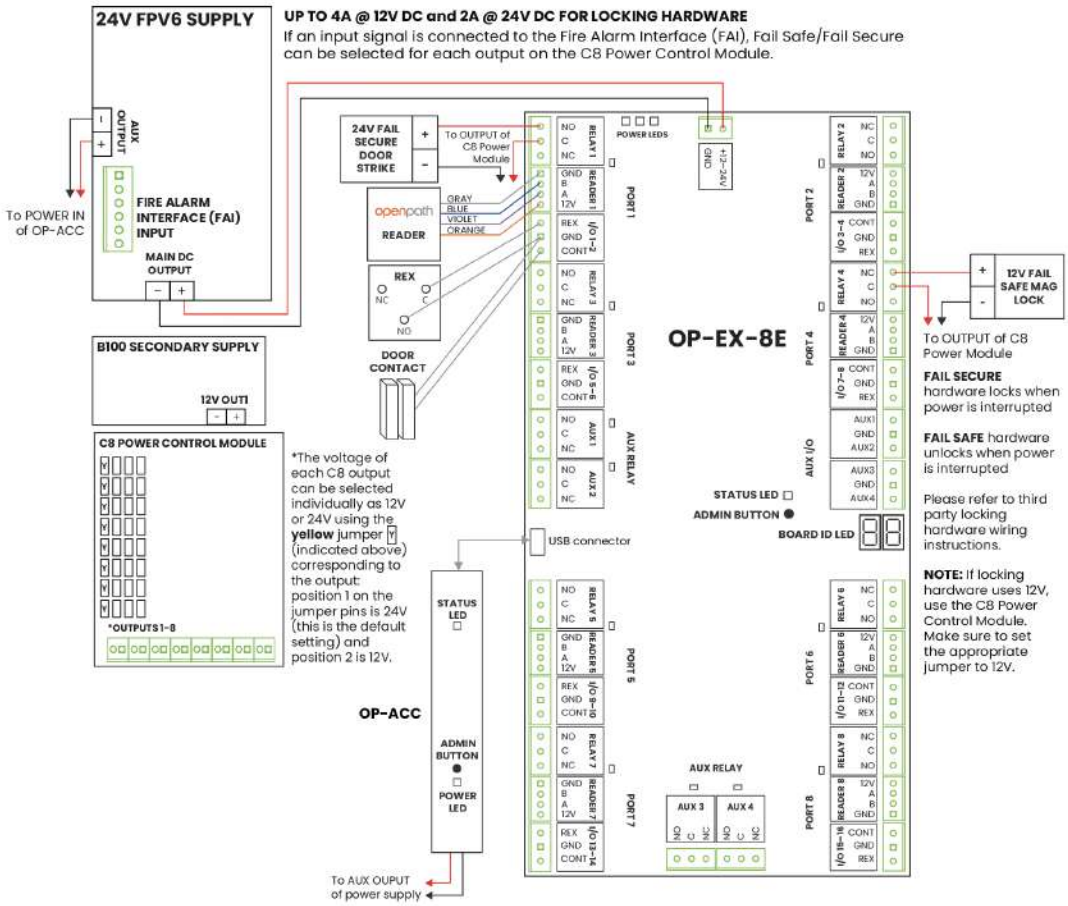

Figure 9 8ENT-SYS-1224V Wiring Diagram

Wiring the REX with door strikes

Except where required by fire or safety codes, for convenience you can wire the REX in parallel with the door strike on the same relay output.

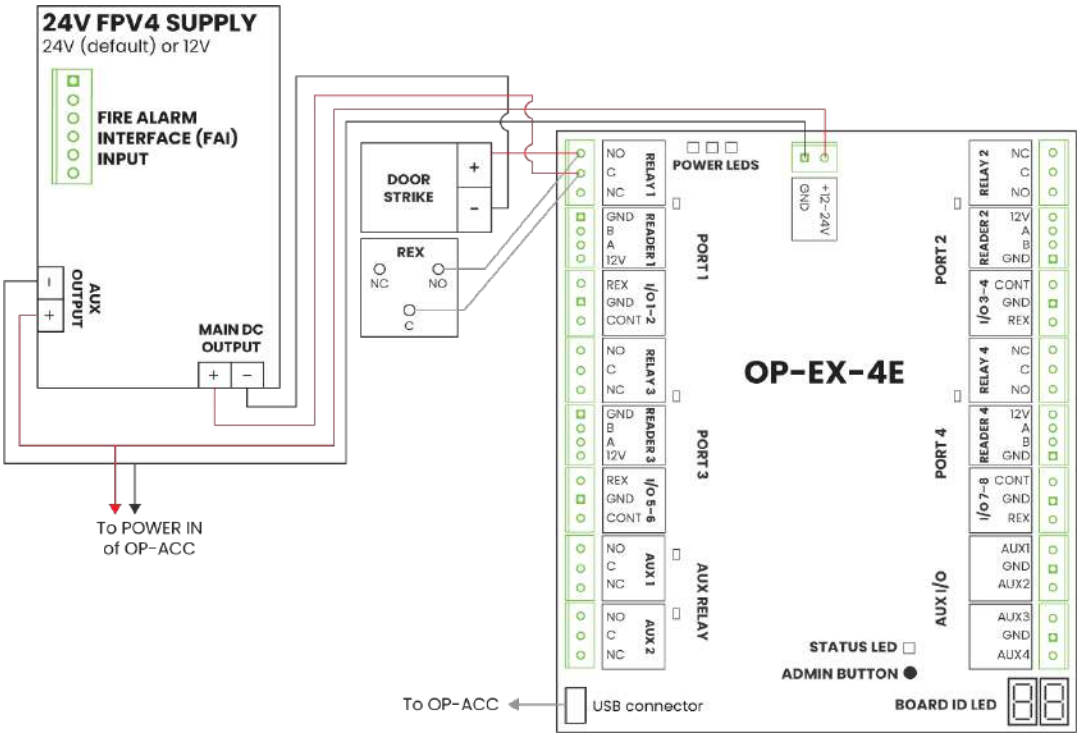

Figure 10 Wiring the REX with the door strike

Wiring the REX to electromagnetic locks

For safety-related applications, you must wire the REX directly to the electromagnetic lock.

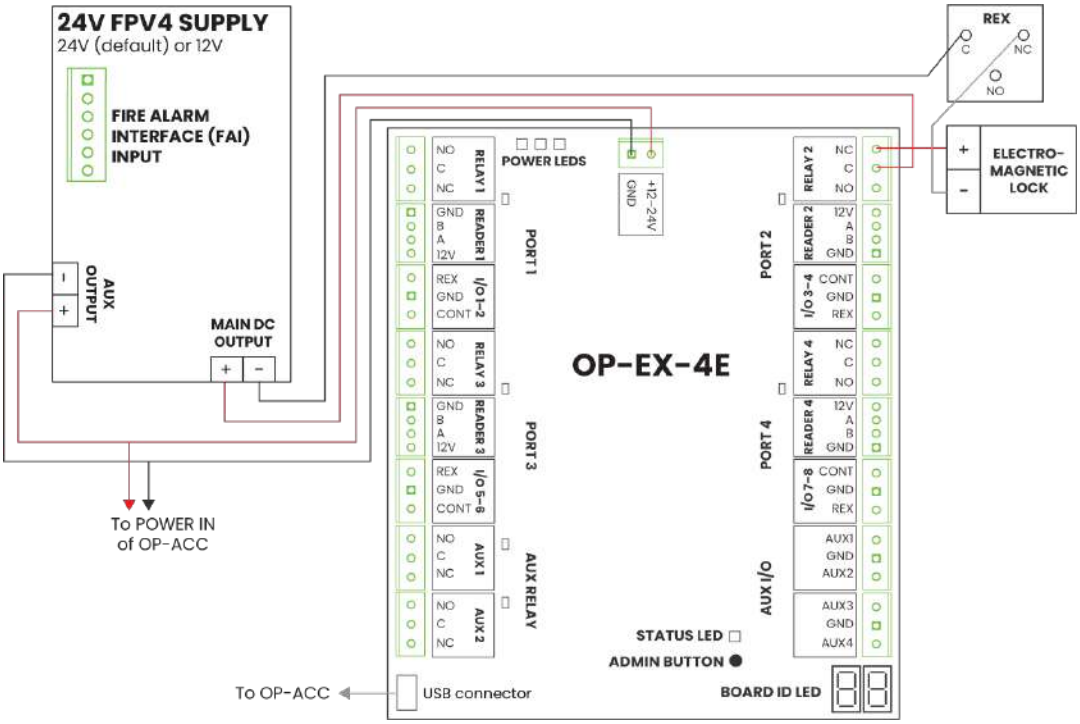

Figure 11 Wiring the REX to the Mag Lock

Wiring fail-safe and fail-safe locking hardware

Fail safe and fail secure are ways of configuring locking hardware:

- **Fail safe** hardware **unlocks** when power is interrupted.
- **Fail secure** hardware **locks** when power is interrupted.

Advanced configurations

Wiring Wiegand readers to Avigilon readers

To support additional card credentials, biometric scanners, and PIN codes, you can wire third-party readers to the ACU by using the Smart Reader pigtail. Simply connect the power (red), ground (black), WD0 (green), and WD1 (white) from the Smart Reader pigtail to the Wiegand reader.

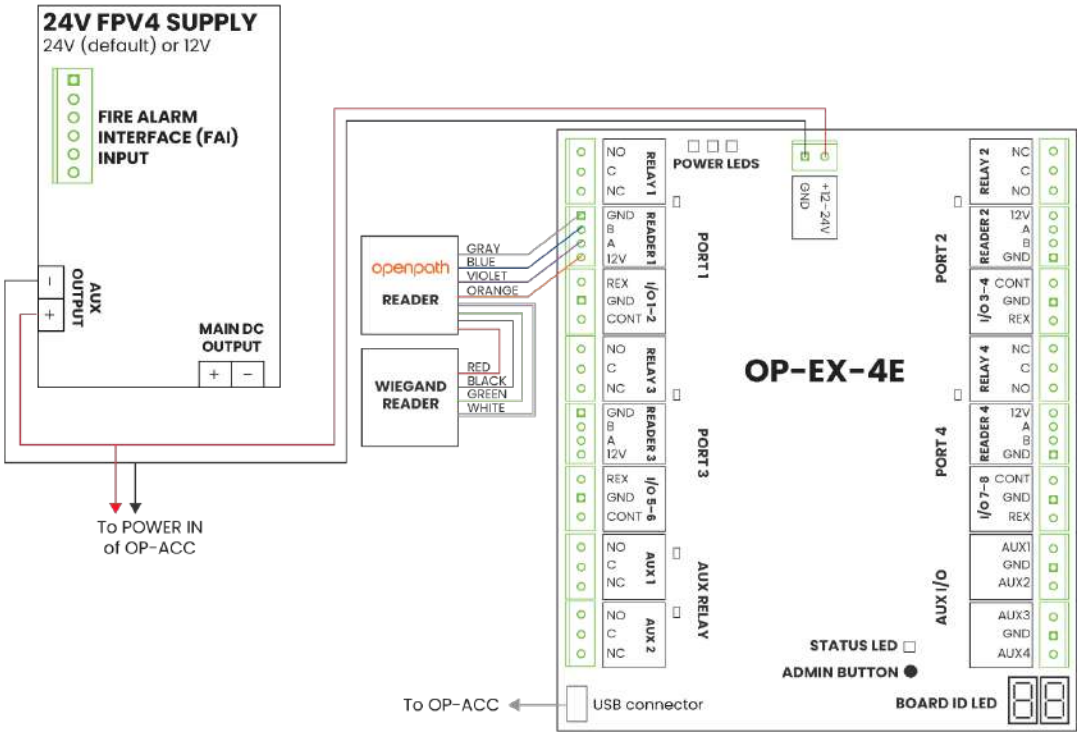

Figure 12 Wiring Wiegand readers to Avigilon readers

Wiring to legacy panels and mobile gateway

> **Note:** The Avigilon Pro series readers (Avigilon Video Reader Pro and Avigilon Video Intercom Reader Pro) do not require the Avigilon ACU.

To add mobile credential features to a legacy access control system:

1. Install the Avigilon ACU (a) between the Avigilon readers (b) and the legacy panel (c) connected to legacy software (d), with the Change I/O types below of the ACU configured as output to the legacy panel (see Configure Wiegand devices in the Control Center on the next page).

2. Replace low frequency (LF) Wiegand readers with LF Avigilon readers and high frequency (HF) Wiegand readers with HF Avigilon Standard Smart ReaderAvigilon readers, or replace either with Smart Reader v2 which supports both.

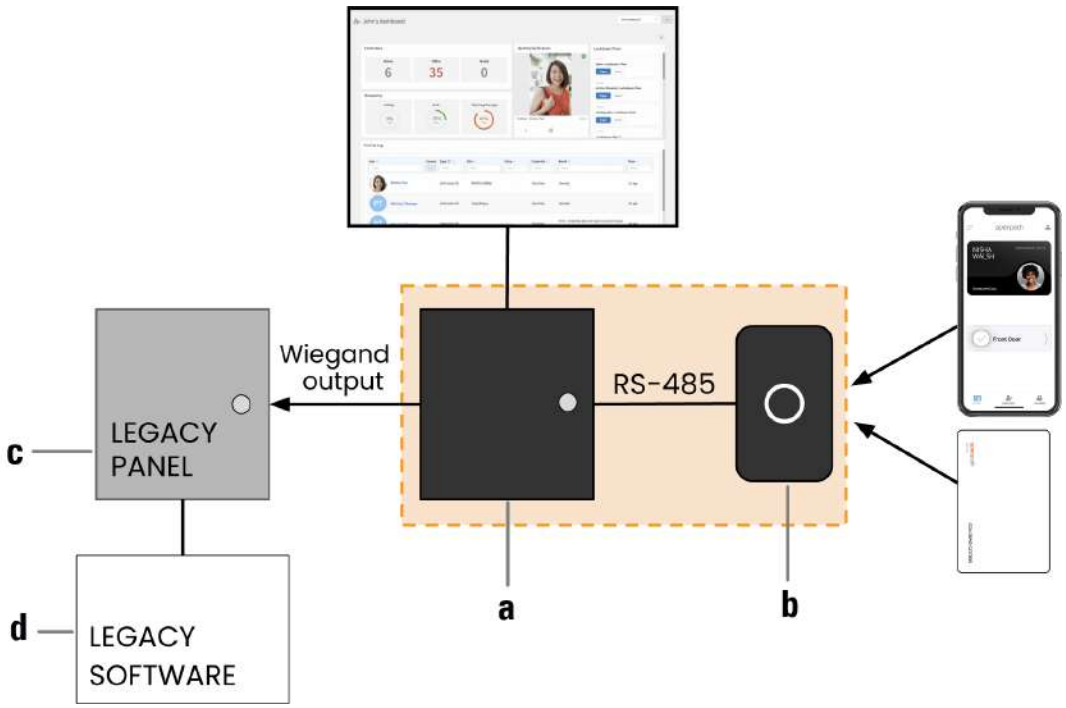

Figure 13 Wiring ACUs to legacy panels and legacy software

In this configuration, the legacy panel controls all locking hardware and entry mechanisms while the Avigilon system lets you use the Openpath mobile app, Smart Reader, and Wave to Unlock functionality. Refer to the Avigilon Alta Control Center Administrator Guide for more information on configuring Mobile Gateway settings.

Change I/O types

While I/Os on the 4-Port Board and 8-Port Board are labeled REX and CONTACT by default, you can use these I/Os interchangeably or as generic inputs, by modifying their type in the Control Center. You can also change them to Wiegand inputs, which requires a few extra steps. For more information, see "Configuring Control Center with legacy systems" in the Avigilon Alta Control Center Administrator Guide.

Change input types in the Control Center

1. Go to control.openpath.com/login and sign in. To access the European Control Center, go to control.eu.openpath.com/login.

2. Go to **Devices** > **ACUs** and click the ACU to edit it.

3. Click on the **Ports** tab.
4. Click **Ports** next to the input to be re-purposed.
5. Select a different type from the **Input Type** dropdown, and click **Save**.

Wire to Wiegand devices on Core Series Smart Hubs

You can wire third-party Wiegand readers and panels to the ACU to support integrations or in the case of Mobile Gateway. The extra Auxiliary I/Os on the 4-Port Board and 8-Port Board are helpful for wiring Wiegand Devices, however any I/O pair may be used (including Contact and REX inputs).

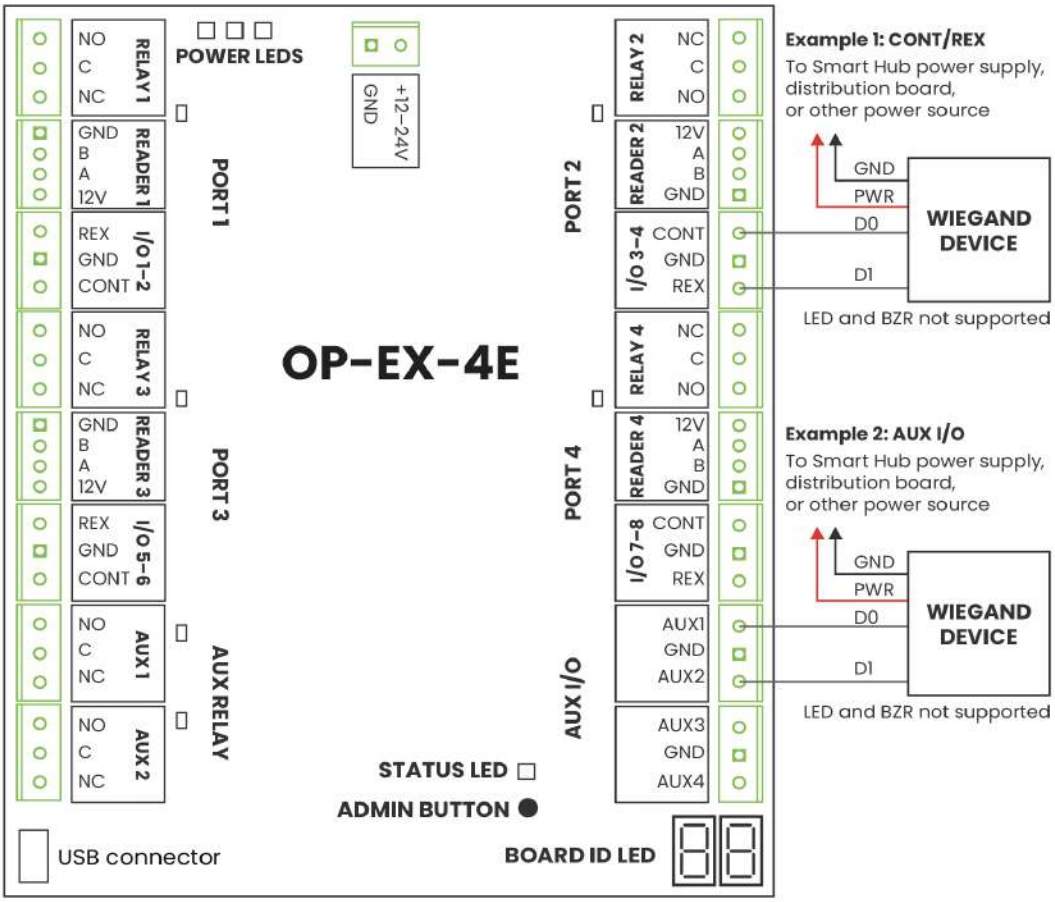

Figure 14 Wiring a Wiegand Device to a Core Series Smart Hub

Configure Wiegand devices in the Control Center

1. Go to control.openpath.com/login and sign in. To access the European Control Center, go to control.eu.openpath.com/login.
2. Go to **Devices** > **ACUs**, then click on the ACU to edit it.
3. Click on the **Ports** tab.

4. Click **Port** next to the first input of the I/O pair with a Wiegand device configured (in example 1, Contact2; in example 2, AUX1).

5. Select from **Input Type**, and click **Save**.

This will label the subsequent input as Wiegand Device (Extended) and disable it from editing. Inputs cannot be changed if they are already assigned to an entry.

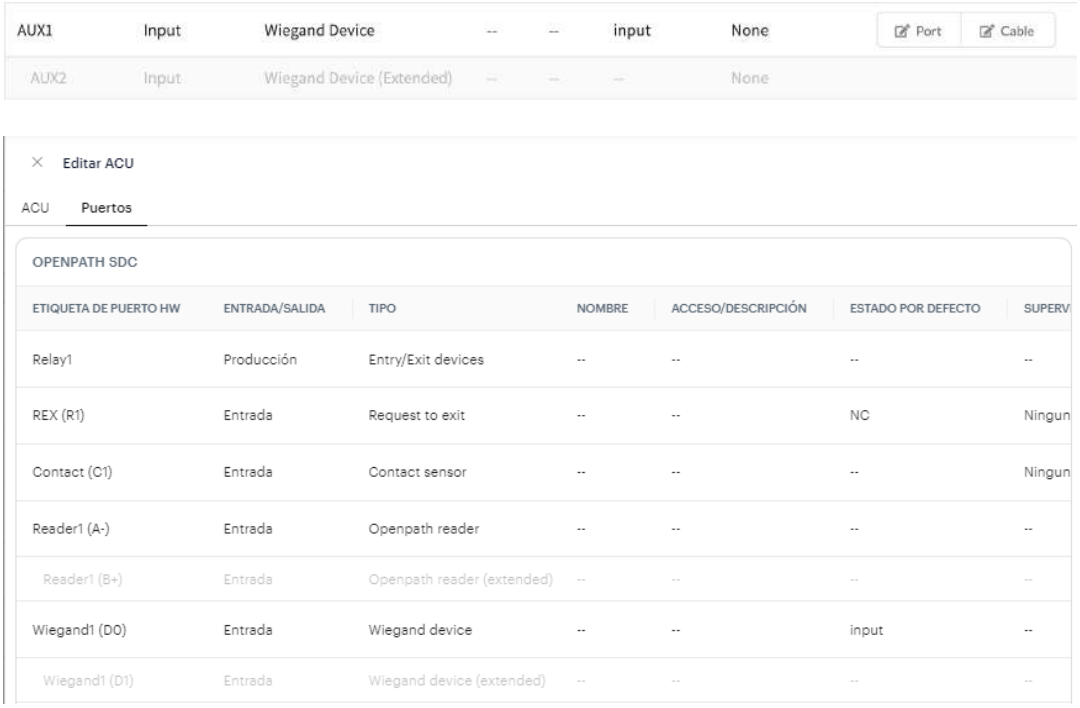

Figure 15 Input settings in the Control Center

Once the Wiegand Device is configured on the ACU, it can be assigned to an entry. Go to **Sites** > **Entries**, and create or edit an existing entry. In the Wiegand Device settings, configure the following:

- **Port** — Select the port for the Wiegand Device to which this Entry is wired.
- **Mode** — Select the Mode to set which direction the card credential data is sent:
  - Use **Input** to receive data from devices such as a Wiegand reader.
  - Use **Output (Gateway)** to send credential data to a third-party control panel.
    - Enable **Gateway Credential Pass-Through** if you do not want the Avigilon Alta system to authenticate credentials, but rather send all data to the legacy panel for authentication.

- Enter a **Default Gateway Card Number** so that all credentials (including mobile credentials) are sent to the legacy panel as a Wiegand ID.

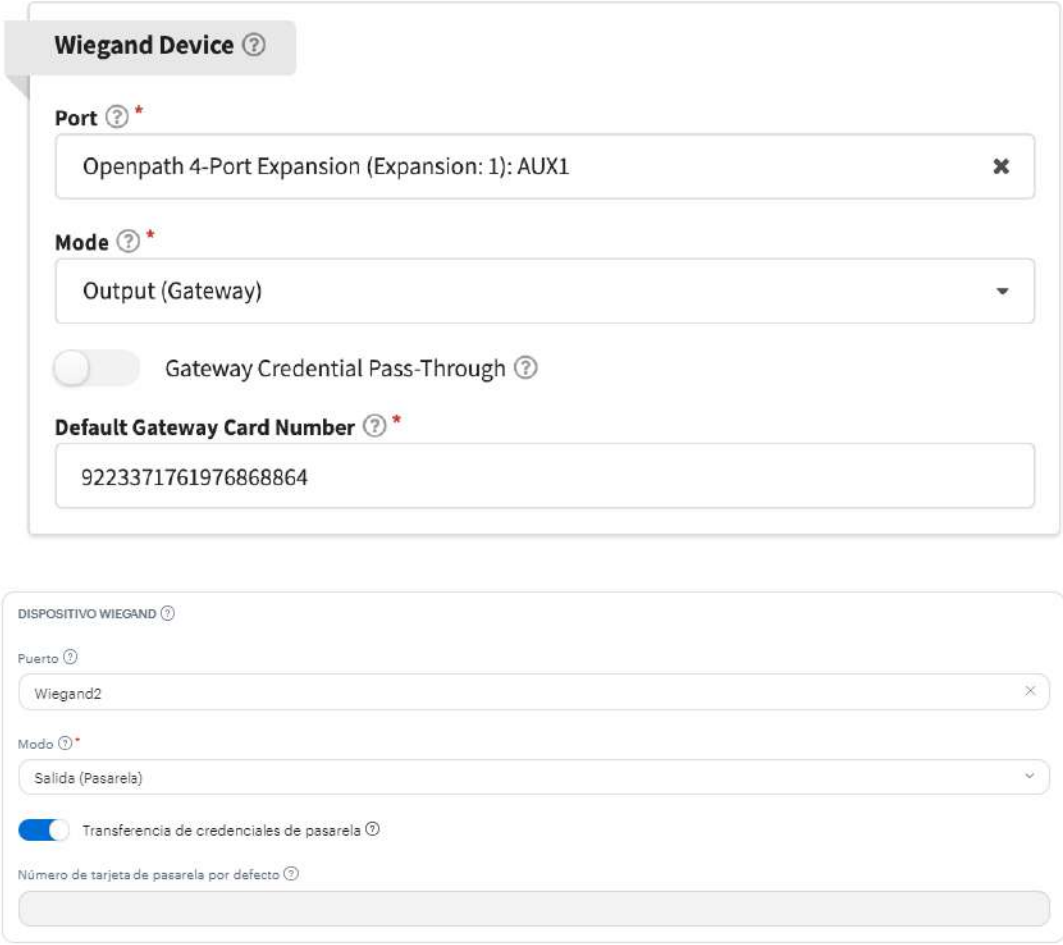

Figure 16 Assigning a Wiegand Device to an Entry

For more information on creating entries, refer to the Avigilon Alta Control Center Administrator Guide.

End-of-line supervision

The 4-Port Board and 8-Port Board inputs have support for user-installed single or double 1k ohm termination. This lets you monitor cut or shorted lines and create alerts and rules in the Control Center. The input settings in the Control Center must match the physical wiring configurations.

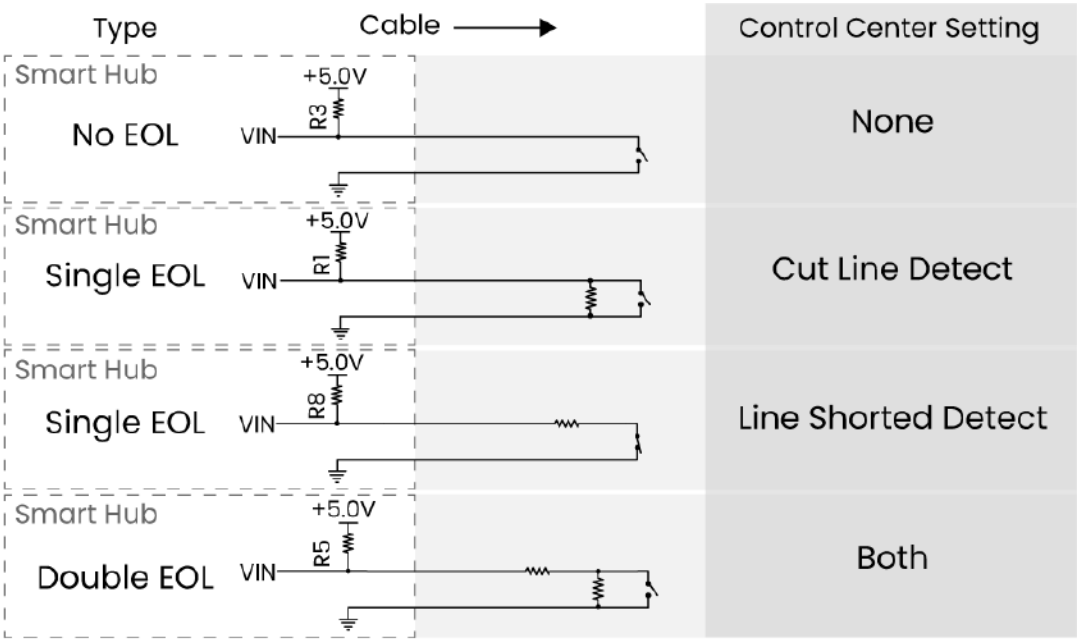

Figure 17 EOL configurations and settings

Configure EOL in the Control Center

1. Go to control.openpath.com/login and sign in. To access the European Control Center, go to control.eu.openpath.com/login.
2. Go to **Devices** > **ACUs**, then click on the ACU to edit it.
3. Click the **Ports** tab.
4. Click **Cable** next to the port with EOL configured.
5. Select the appropriate **End of line supervision** setting from the dropdown, and click **Save**.

Troubleshooting

ACU LEDs

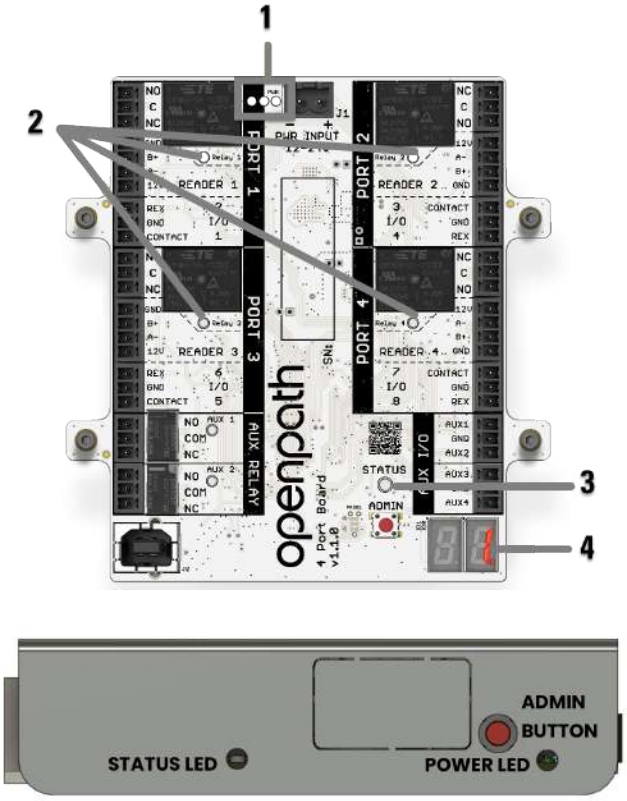

Figure 1 Expansion Board and Core LEDs

Avigilon ACUs (Access Control Core and Expansion Boards) have several LEDs that indicate the following.

No.	Description
1	**POWER LEDs** indicate that the board is connected to power.
2	Relay indicate when the relays are activated.
3	**POWER LEDs** indicate that the board is connected to power.
4	STATUS LED indicates that the ACU has been configured with firmware. • On the 4-Port Board and 8-Port Board, the STATUS LED is solid green when it is connected and communicating with the Core, and solid red when there is a connection error. • If the STATUS LED is solid red, try the following: a. Power cycle the 4-Port Board or 8-Port Board. b. Unplug and replug the USB cable. c. Restart the device in the Control Center.

No.	Description
	Tip: Go to **Devices** > **ACUs**, select the device, and choose **Restart Device Communicator** from the Action column.
	• The STATUS LED on the Access Control Core has several states, see Status LED on Access Control Core below.
5	**BOARD ID LEDs** match the Expansion Board Number in the Control Center.

Status LED on Access Control Core

The Status LED on the Access Control Core controller board indicates the following:

	Solid green	Normal operation
	Solid cyan	Booting
	Solid yellow	Restoring software
	Blinking yellow	Updating software
	Solid blue	Unprovisioned state
	Solid purple	Connected to Open Admin app
	Blinking purple	Ready to connect to Open Admin app
	Blinking red	No internet
	Solid red	Error, see Avigilon Alta Control Center

Reader LEDs

The Avigilon reader LEDs indicate the following:

	Center dot is solid white.	Entry or door is locked.
	Outer ring is solid white.	Entry or door is unlocked.
	Center dot flashes multiple colors. Outer ring quickly spins once.	Reader has received power.
	All lights are off.	Reader is not connected to power. Check if power wires are swapped.
	Center dot is flashing red.	Reader is connected to power, but cannot communicate with the ACU. Check if the +B (blue) and -A (violet) lines are swapped.
	Center dot is solid blue.	Reader is connected to power and can communicate with the ACU. Reader is not configured as an entry in the Control Center.
	Center dot is solid green. Outer ring is solid.	Reader is identified by the Control Center.

	Center dot is solid purple. Outer ring is solid white.	Reader might not be receiving enough voltage or current, potentially due to a break in wiring. Try connecting the reader directly to the ACU, bypassing any wire runs.
	Center dot is solid pink. Outer ring is solid white.	Check that +12V IN (orange) is not swapped with +B (blue) or -A (violet).

Avigilon Pro series readers

The Avigilon Video Reader Pro and Avigilon Video Intercom Reader Pro LEDs indicate the following:

	Center dot is solid white.	Entry is locked.
	Outer ring is solid white.	Entry is unlocked.
	All lights are off.	Reader is not connected to power. Check to see if power wires are swapped.
	Center dot is flashing blue.	Device is booting.
	Center dot is solid yellow.	Device is restoring software to factory default.
	Center dot is solid blue.	Reader is ready to be provisioned or has not been configured as an entry in the Control Center.
	Center dot is solid purple.	Reader is ready to connect to Admin app.
	Center dot is solid green and the outer ring is solid white.	Reader has been identified via the Control Center.
	Center dot is flashing red.	Internal error.

Legacy wiring

Sometimes legacy wiring (unshielded and straight through, rather than shielded twisted pair, often 22-6) results in slower connections and dropped packets between the Avigilon reader and ACU. To remedy this, you can switch GND and VIN with +B and -A connections on the ACU and readers to ensure the data pair (+B and -A) are using the alternate pair of legacy wires.

Resetting ACUs

Soft reset

To soft reset the ACU, disconnect power from the ACU, wait 10 seconds, then reconnect the power.

Hard reset

Warning: Only hard reset the ACU if absolutely necessary and if instructed by Avigilon Alta. This will clear all of the data off of the ACU and will require reprovisioning.

1. Disconnect power from the ACU.
2. Press the ADMIN button for 15 seconds .
3. While still pressing the ADMIN button, reconnect the power, and continue to hold the button for another 15 seconds, then release.
4. Wait 15 minutes or until the Status LED turns blue before Provisioning ACUs below.

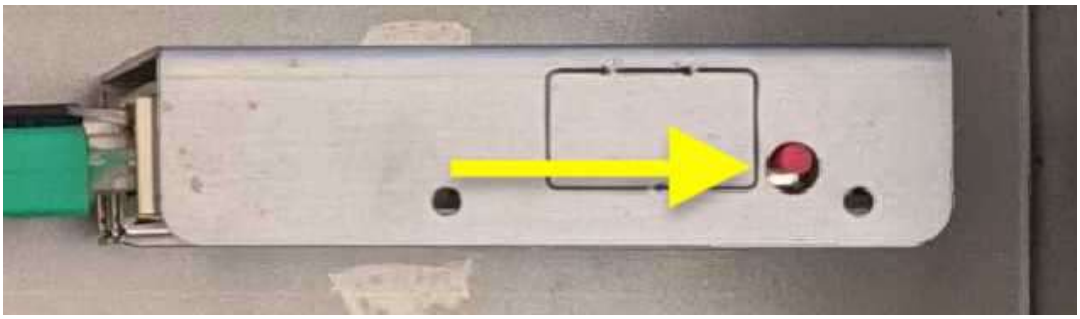

Figure 2 ADMIN button on Core

Reset video readers and video intercom readers

Warning: A hard reset will erase all data on the device. Only reset if instructed by Avigilon Alta.

1. Disconnect power from the device.
2. Press and hold the Admin button.
3. Reconnect power to the device.
4. Continue pressing the Admin button until the LED turns solid yellow (about 10 seconds), then release.

Provisioning ACUs

Provisioning the ACU means registering it in the Avigilon Alta Control Center and getting it up and running with the latest firmware. You will need to re-provision in the case of Resetting ACUs on the previous page.

Note: If you're provisioning ACUs for a customer account, the customer org needs to be created first.

Requirements

- Meet all Network requirements on page 10.
- Connect the ACU to the Internet via Ethernet.
- Install the Open Admin app.
    - iOS App Store
    - Google Play™ Store
- If using a laptop instead of the app, the laptop must be on the same network as the ACU. If you have a VLAN, make sure the laptop is on the same VLAN as the ACU.
- If using a laptop running Microsoft™ Windows or Linux®, you must download the iTunes app. The provisioning process uses Bonjour software that comes with iTunes. Optionally, you can download iTunes and use an archive utility to extract and install only the Bonjour MSI.

Add ACUs

Before you can provision an ACU using the Open Admin app, you must first create an ACU in the Control Center.

Add multiple ACUs using Quick start option

1. Go to control.openpath.com/login and sign in. To access the European Control Center, go to control.eu.openpath.com/login.
2. Go to **Administration** > **Quick start**.
3. Enter a **Site name** and any other relevant site information.
    a. In **Organization language**, select the preferred language for the emails sent by the system.
    b. Click **Next**.
4. Enter the number of controllers located at your site:
    a. Enter names for the controllers.
    b. In **Controller type**, select the type used:

Linux® is the registered trademark of Linus Torvalds in the U.S. and other countries.

- **First generation - Red Board (OP-AS-01)** — For first generation Smart Hubs.
- **Single Door Controller (SDC)**
- **Core series ACU** — For Core Series Smart Hubs.

c. If your ACU also connects to an expansion board, add the appropriate types in **EXPANSION BOARDS**:

- **Openpath 4-Port Expansion**
- **Openpath 8-Port Expansion**
- **Openpath 16-Port Elevator**

> **Tip:** This configuration is most common with the Core Series Smart Hubs.

5. Enter the number of readers connected to the controllers. Enter their names and click **Next**.
6. Review your site details and click **Confirm & Submit**. It may take a few minutes for setup to complete.

Add one ACU

1. Go to **Devices** > **ACUs**.
2. To add a new ACU, click the + button in the upper-right corner.
3. Enter a name for the ACU.
4. In **Controller type**, select the type used:
   - **First generation - Red Board (OP-AS-01)** — For first generation Smart Hubs.
   - **Single Door Controller (SDC)**
   - **Core series ACU** — For Core Series Smart Hubs.
5. If your ACU also connects to an expansion board, add the appropriate types in **EXPANSION BOARDS**:
   - **Openpath 4-Port Expansion**
   - **Openpath 8-Port Expansion**
   - **Openpath 16-Port Elevator**

> **Tip:** This configuration is most common with the Core Series Smart Hubs.

6. Optional. To connect your network to the Cloud using a static IP address and port on an allowlist, select the **Enable Static Cloud IP** toggle. Default port is 443.

> **Note:** An Enterprise plan is required to use a range of static IP addresses. In addition, go to **App marketplace** and ensure the **Static Cloud IP** app is installed. After the toggle is enabled in the Control Center, open the Open Admin app and select **Provision with Static Cloud IP** to provision the devices.

7. Click **Save**.

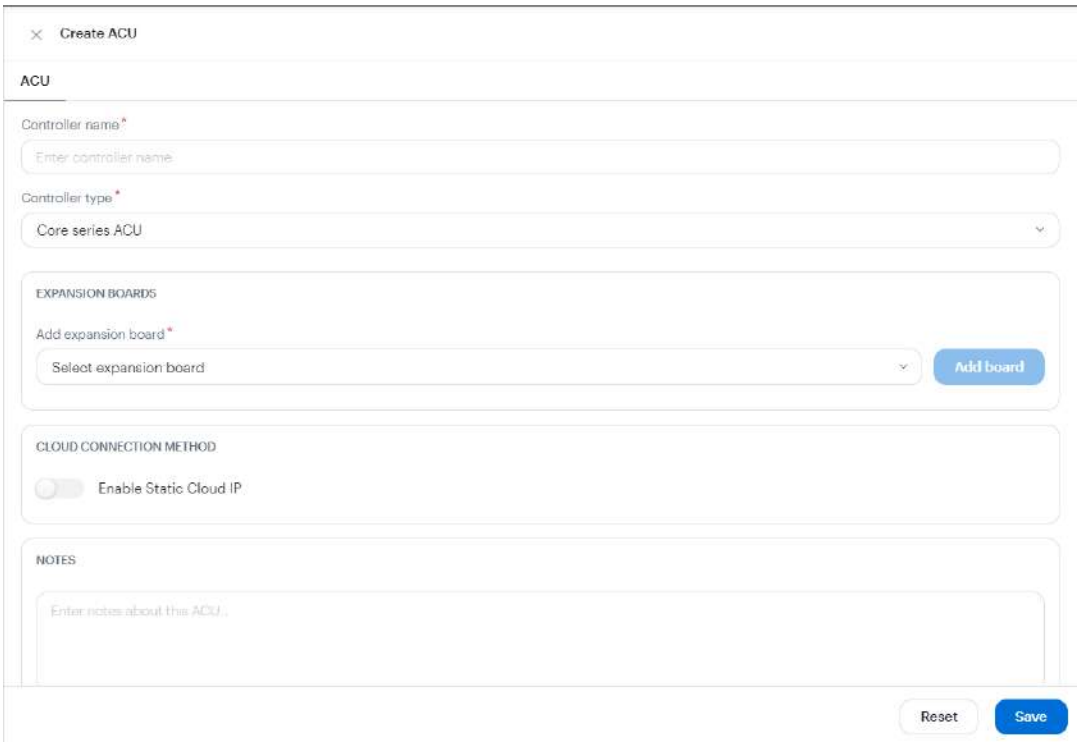

(The Enable Static Cloud IP field is not shown in the above example.)

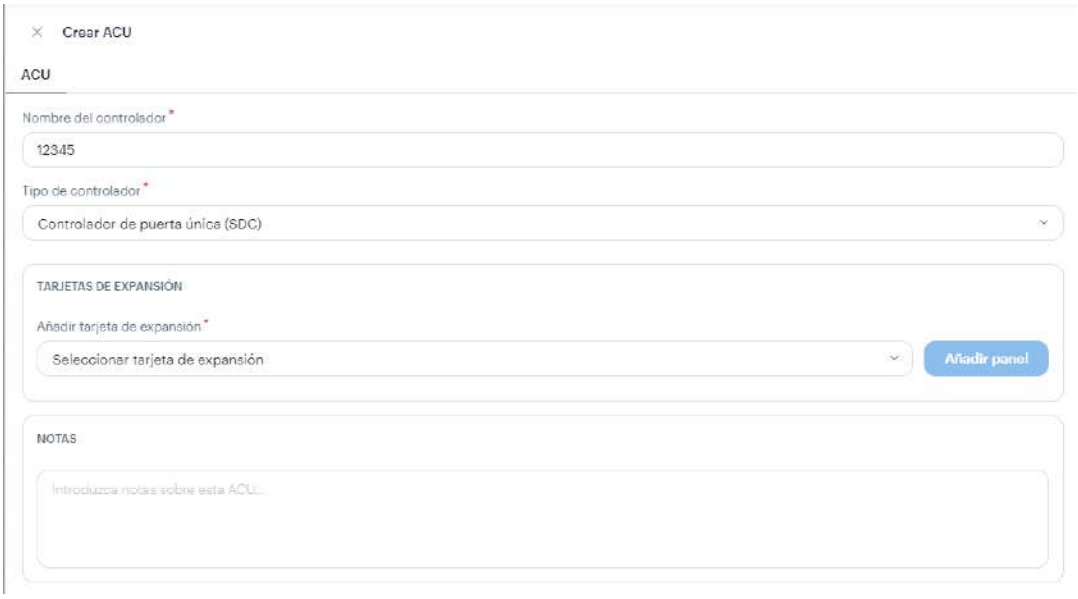

(The Enable Static Cloud IP field is not shown in the above example.)

Figure 3 Create ACU

Disable the Static Cloud IP connection

- Go to the Edit ACU page, and deselect the **Enable Static Cloud IP** toggle.

  Normal cloud operation resumes after the Static Cloud IP connection is disabled.

Provisioning steps

Provision the ACU with the Open Admin app (recommended)

1. Log in to the Open Admin app with your Control Center credentials.
2. Locate the org to which you're provisioning hardware, either on the list or using search, and then tap the org name.
3. Press the Admin button on the Controller Board or Access Control Core.
4. In the Open Admin app, tap on the last four digits of the serial number for the ACU.
5. Tap **Test Internet Connection**, and wait for a green YES to appear before proceeding with the next step.

   > **Note:** This checks if the ACU/SDC can ping https://api.openpath.com/health.

6. Tap **Provision Device**.

7. Tap the ACU Name that you want to provision to (this is the name of the ACU you created in the Control Center), then tap **Yes** to proceed.
8. Optional. Tap **Provision with Static Cloud IP**, if the Static Cloud IP toggle is enabled in the Control Center.
9. The app will send notifications when the ACU provision state changes from **Unprovisioned** to **Provisioning in progress** to **Provisioning complete**.

> **Note:** ACU will disconnect from the Open Admin app 5 minutes after first pressing the Admin button.

Provision the ACU with a laptop

1. Go to control.openpath.com/login and sign in. To access the European Control Center, go to control.eu.openpath.com/login.

> **Note:** The laptop must be connected to the same network as the ACU.

2. Go to **Devices** > **ACUs**.
3. Locate your ACU on the list.
4. If you don't see your ACU listed, create a new one:
   a. Click the + button in the upper-right corner, and enter a name.
   b. Click **Controller type**, select the appropriate type, and add any expansion boards if necessary.
   c. Click **Save**.
5. On the ACU, press the ADMIN button.
6. In the Control Center, click the **Register** button (lightning icon) next to the name of your ACU.
7. Click **Yes** to proceed.
8. A new window will open, click **Provision**.
9. If you see a "This Site Cannot be Reached" error, you need to ping the ACU using the command line:
   a. Open a command prompt and run:
      i. On Windows: `ping oppi.local`
      ii. On Mac or Linux: `ping -c4 oppi.local`

- If nothing returns, check your network requirements. See Network requirements on page 10.

b. You should see the ACU's IP address (either in IPv4 or IPv6 format). Copy the address and return to the error page.

c. In the URL, delete everything before :8080

   i. If using an IPv4 address, paste before :8080. For example: `192.0.2.0:8080`

   ii. If using an IPv6 address, delete the last two digits and the percentage sign, put square brackets outside the address, and paste before :8080.

      - **Correct:** `a123::b456:5a18:eb8f:7fd6:8080`
      - **Incorrect:** `a123::b456:5a18:eb8f:7fd6%29:8080`

   iii. Press **Enter**, then click the **Provision** button.

   iv. If the Provision button still doesn't appear, contact Avigilon Alta Support at (844) 673-6728 Ext 2 or support@openpath.com.

Test internet connection

In the Open Admin app, you can tap **Test Internet Connection** to check if the ACU can ping https://api.openpath.com/health.

Network settings

In the Open Admin app, you can configure network settings for the ACU. While wired Internet connections are preferred, you can configure the Core to use Wi-Fi instead. The default interface for the Core is Ethernet/wired connection. Ethernet and Wi-Fi connections can be DHCP (default) or can have a static IP address.

The Core supports 2.4 GHz and 5 GHz Wi-Fi connections.

Change network settings

1. Connect to the Core by pressing the Admin button again, if needed.
2. Connect to the SDC by pressing the Admin button again, if needed.
3. Tap on **Network Settings**.
4. Select **Configure network manually**.
5. Configure the network settings as needed. Set a static IP address or set a preferred DNS server.
6. Tap **Save** on the top-right corner.

Set up Wi-Fi on the Core

1. Connect to the Core by pressing the Admin button again, if needed.
2. Tap on **Network Settings**.
3. Tap on **Wi-Fi IP Settings**.
4. Enable **Default Interface**.
5. Tap on **Pick Wi-Fi Network**.
6. Choose your network and enter your password, then tap **Connect**.

Figure 4 Admin App Wi-Fi Settings

Appendix: First-generation Smart Hubs

Openpath (now Avigilon) first-generation hardware includes the 4 Door Controller (OP-4ECTR), 12V Smart Hub (OP-SH-12V), and 24V Smart Hub (OP-SH-24V).

Selecting a backup battery

Table 1 Power requirements for first gen Smart Hubs (12V)

4 Door Controller	1A
Smart Reader	0.25A
Locking hardware (while engaged)	0.25A--0.5A

Assuming a 12V power supply, a Smart Hub configured with four Avigilon Readers and locking hardware uses 4 Amps. To keep the system running for 3 hours with all entries engaged, you need 4A x 3 hours = 12AH, so a 12V 12AH sealed lead acid (SLA) or gel cell battery.

Note: The 12V Smart Hub (OP-4ESH-12V) supports up to 2A for 12V locking hardware.

Installing 4-Door Controller with 24V locking hardware

For a UL Listed System, the standalone Controller Board must be mounted in a LifeSafety Power E1 enclosure with an FPV4 power supply.

Warning: Only connect the Controller Board to 12V. Over voltage can damage the board.

If you purchased the Controller Board separately and are using 24V locking hardware, we recommend using the LifeSafety Power E1 enclosure, FPV4 power supply, B100 secondary power supply, and C4 power control module.

1. Follow all LifeSafety Power instructions for installing the FPV4, B100, and C4 in the enclosure.
2. Mount the Controller Board using the provided back plate.
3. Connect the B100 secondary supply to the Controller Board.

Important: Verify that the jumper on the B100 is set to 12V.

4. Mount the enclosure according to Mounting instructions on page 10.

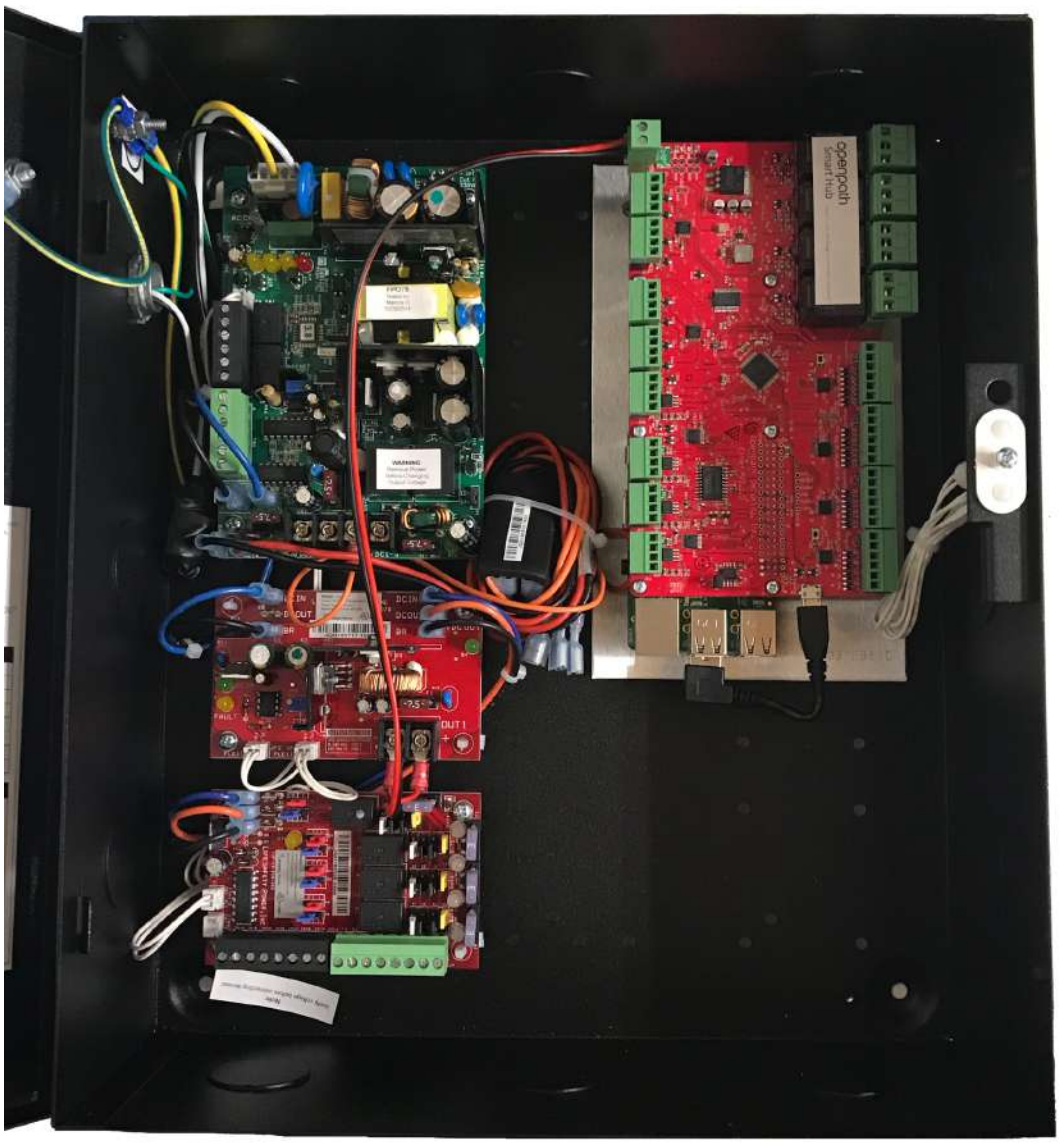

Figure 1 First gen 12/24V Smart Hub configuration

Wiring with the 12/24V power supply

The 12/24V Smart Hub ACU (OP-4ESH-24V) uses the LifeSafety Power® FPV4[1] to power 24V locking hardware, a LifeSafety Power B100[2] secondary power supply to power the ACU Board, and the LifeSafety Power C4 Control Module[3] to power 12V locking hardware.

[1]For more information, see https://www.lifesafetypower.com/docs/im_fpv-standard.pdf.

[2]For more information, see https://lifesafetypower.com/docs/im_b100.pdf.

[3]For more information, see https://lifesafetypower.com/docs/im_c4c8.pdf.

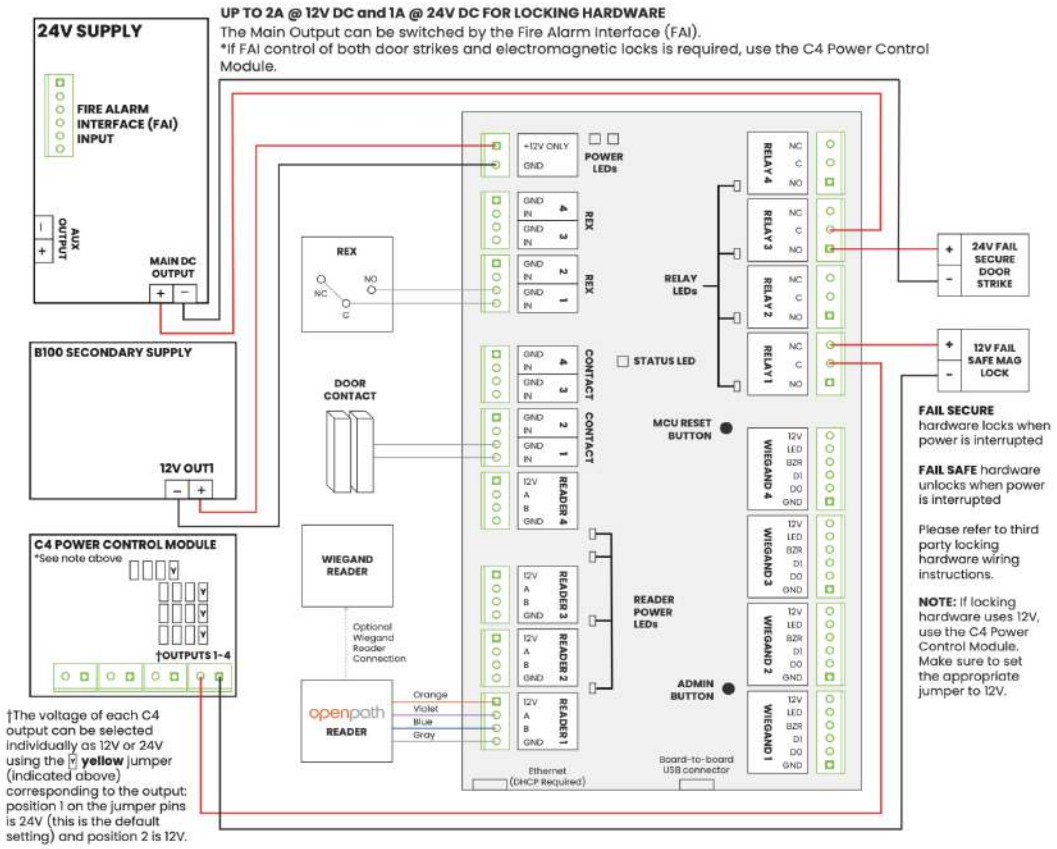

Figure 2 OP-4ESH-24V Wiring Diagram

All of this is configured as one Entry in the Avigilon Alta Control Center. We recommend matching port numbers (READER 1 with CONTACT 1, for example). When setting up Sites in the Control Center using Quick Start, Entries will default to matching READER 1 with CONTACT 1, RELAY 1, and so on. For more complex Entry setups, you'll need to manually add Controls to the Entry. For the example above, you'd need to add an additional entry or exit Hardware Control to the Entry. For more information, refer to the Avigilon Alta Control Center Administrator GuideOpenpath User Guide.

This example contains:

- An Avigilon Reader on READER 1 port (also connected to a Wiegand reader, optional)
- A door contact sensor on CONTACT 1 port
- A REX on REX 1 port
- A 24V fail secure door strike on RELAY 3
- A 12V fail safe electromagnetic lock on RELAY 1

Wiring with the 12V power supply

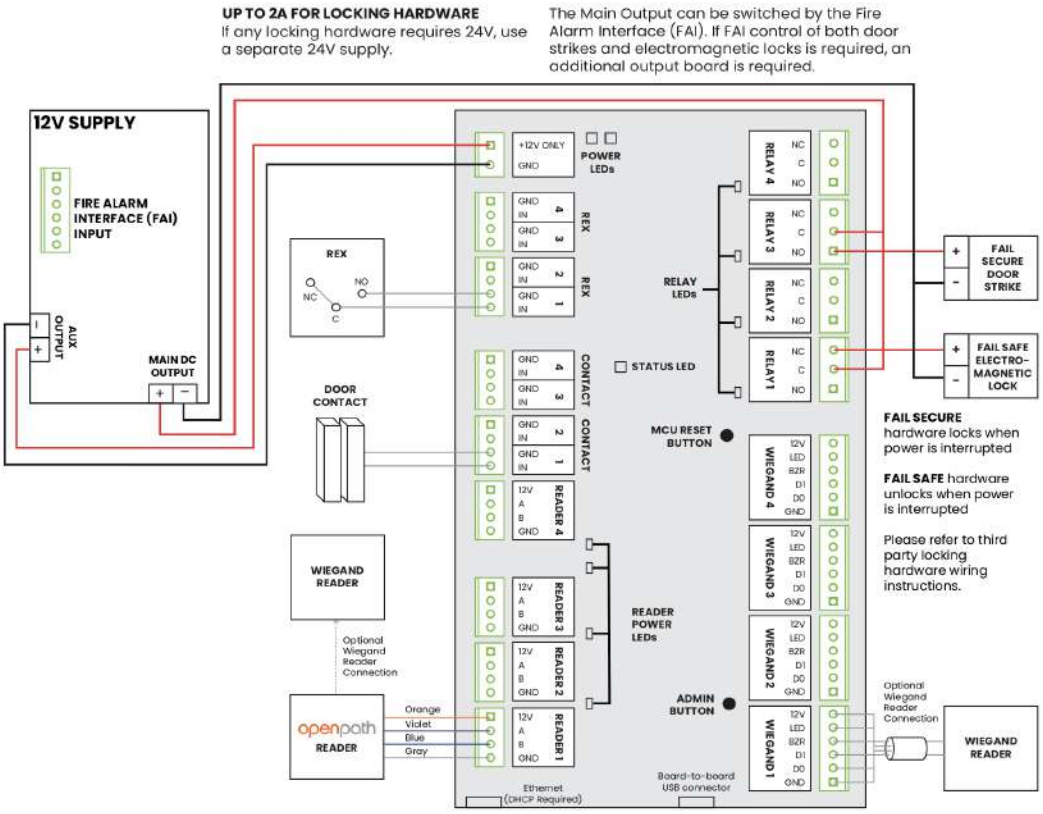

Figure 3 OP-4ESH-12V Wiring Diagram

Wiring the Avigilon Elevator Board to a 4-Door Controller

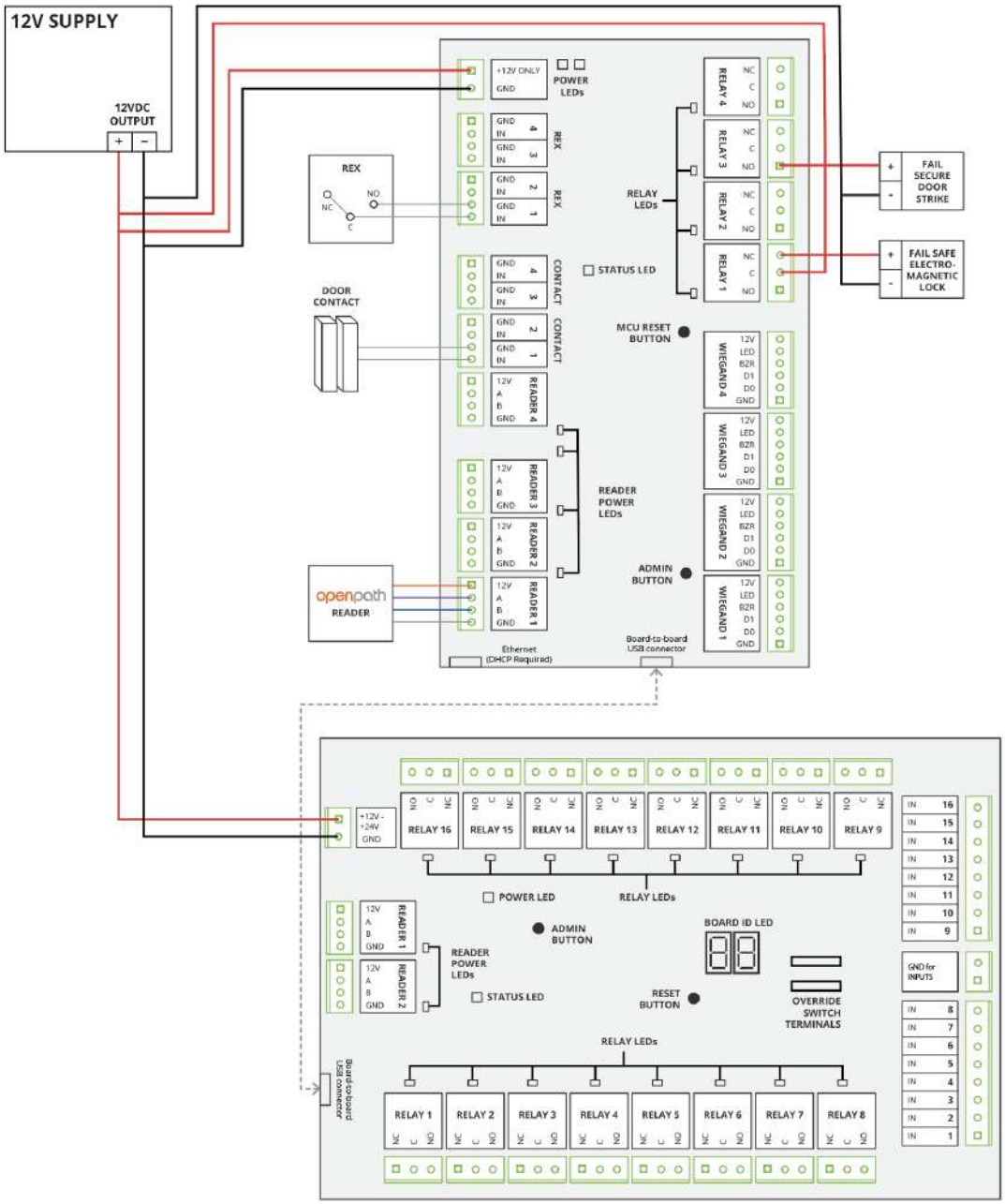

Figure 4 Wiring the Avigilon Elevator Board to a 4-Door Controller

Wiring the 4-Door Controller to legacy panels

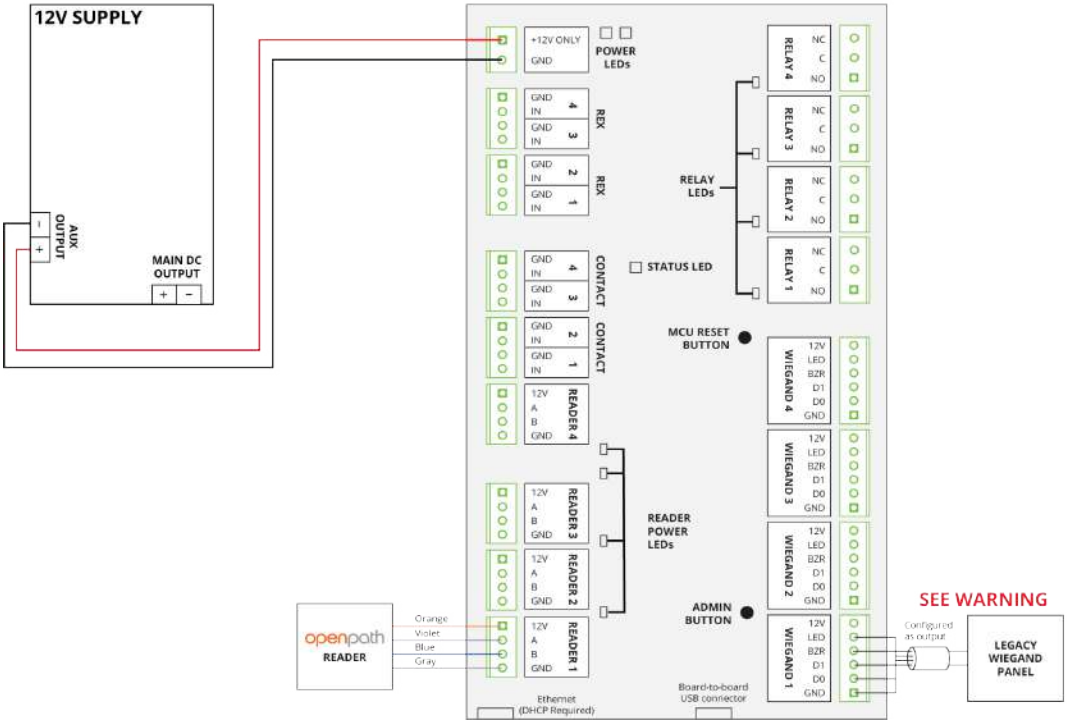

Figure 5 Wiring to legacy panels

Warning: Do not connect 12V out on the Wiegand port to the legacy panel; doing this will cause voltage backfeeding, potentially damaging one of the supplies.

Troubleshooting

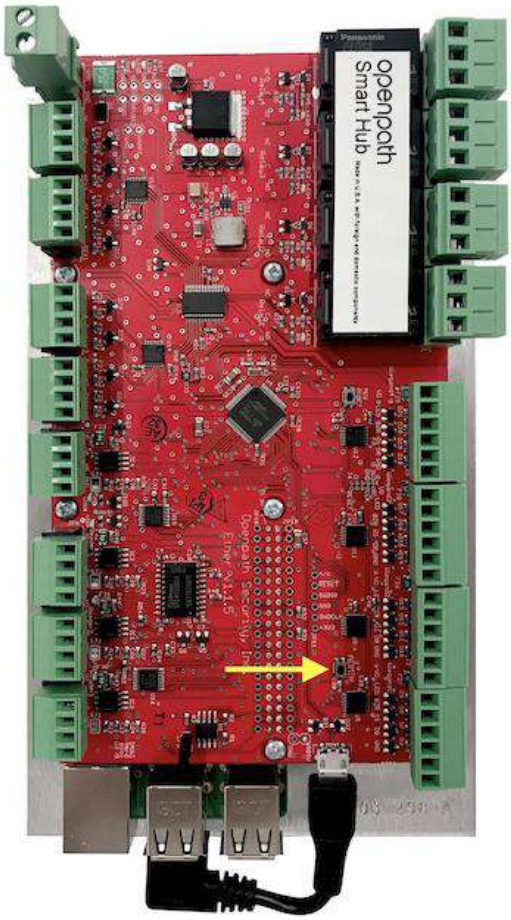

Figure 6 ADMIN Button on 4 Door Controller

Hard reset the ACU

1. Disconnect power from the ACU.
2. Press the ADMIN button for 15 seconds.
3. While still pressing the ADMIN button, reconnect the power, and continue to hold the button for another 15 seconds. You should see two POWER LEDs light up in the top left corner.
4. Wait 15 minutes before Provisioning ACUs on page 49.

4-Door Controller LEDs

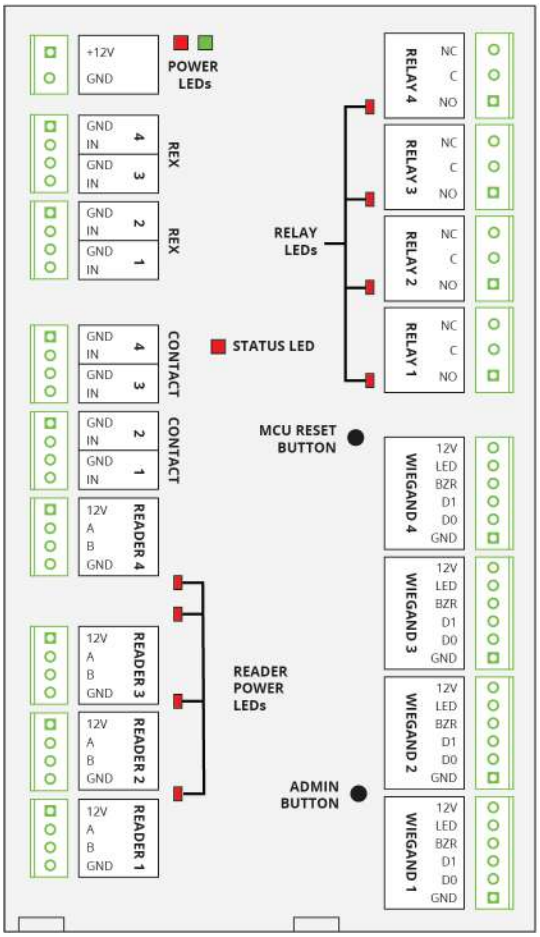

Figure 7 4-Door Controller LEDs

- POWER LEDs indicate that the board is connected to power.
- RELAY LEDs indicate when the relays are activated.
- READER POWER LEDs indicate that the Controller has output power enabled per reader.
- The STATUS LED indicates that the Controller has been configured with firmware.

Regulatory

All national and local electrical codes apply.

UL 294

The following performance levels are defined for the Core Series hardware and 4 Door Controller, as per UL 294:

Attack:	Level I
Endurance:	Level I
Line Security:	Level I
Standby:	Level I

CAN/ULC 60839-11-1-16 GRADE 1

For C-UL Listed applications, the unit shall be installed in accordance with Part 1 of the Canadian Electrical Code.

FCC

This device complies with part 15 of the FCC Rules. Operation is subject to the following two conditions: (1) This device may not cause harmful interference, and (2) this device must accept any interference received, including interference that may cause undesired operation. To comply with FCC RF exposure compliance requirements, a separation distance of at least 20 cm should be maintained between the antenna of Openpath Smart Reader(s) and persons during operation.

NOTE: This equipment has been tested and found to comply with the limits for a Class A digital device, pursuant to part 15 of the FCC Rules. These limits are designed to provide reasonable protection against harmful interference when the equipment is operated in a commercial environment. This equipment generates, uses, and can radiate radio frequency energy and, if not installed and used in accordance with the instruction manual, may cause harmful interference to radio communications. Operation of this equipment in a residential area is likely to cause harmful interference in which case the User will be required to correct the interference at his own expense.

OP-R2X-STND: FCC ID: 2APJVOPR2LHF

OP-R2X-MULL: FCC ID: 2APJVOPR2LHF

OP-R2X-EMBD: FCC ID: 2APJVOPR2LHF

OP-RKP-STND: FCC ID: 2APJVOPRKP

OP-RKP-MULL: FCC ID: 2APJVOPRKPM

OP-VID-PRO-RDR: FCC ID: 2APJVOPVRC

OP-VID-PRO-INT: FCC ID: 2APJVOPVNRC

OP-2ESH-POE: FCC ID: 2APJV2ESH

OP-ACC: Contains FCC ID: 2ABCB-RPI4B

IEC 62368-1

- This equipment is intended only for use in a restricted access area.
- Securely fasten the equipment according to LifeSafety Power mounting instructions. See FlexPower Vantage Standard Power System - Installation Manual[1].
- PROTECTIVE EARTHING: For safety, the Smart Hub must only be plugged into a grounded 3-prong outlet, wired with a minimum of 16 gauge wire to ground.

RF RADIATION HAZARD WARNING

To ensure compliance with FCC and Industry Canada RF exposure requirements, Smart Hubs device must be installed in a location where the antennas of the device will have a minimum distance of at least 20 cm from all persons. Using higher gain antennas and types of antennas not certified for use with this product is not allowed. The device shall not be co-located with another transmitter.

Installez l'appareil en veillant à conserver une distance d'au moins 20 cm entre les éléments rayonnants et les personnes. Cet avertissement de sécurité est conforme aux limites d'exposition définies par la norme CNR-102 at relative aux fréquences radio.

INDUSTRY CANADA NOTICE AND MARKING

Under Industry Canada regulations, this radio transmitter may only operate using an antenna of a type and maximum (or lesser) gain approved for the transmitter by Industry Canada. To reduce potential radio interference to other Users, the antenna type and its gain should be so chosen that the equivalent isotropically radiated power (e.i.r.p.) is not more than that necessary for successful communication.

Conformément à la réglementation d'Industrie Canada, le présent émetteur radio peut fonctionner avec une antenne d'un type et d'un gain maximal (ou inférieur) approuvé pour l'émetteur par Industrie Canada. Dans le but de réduire les risques de brouillage radioélectrique à l'intention des autres utilisateurs, il faut choisir le type d'antenne et son gain de sorte que la puissance isotrope rayonnée équivalente (p.i.r.e.) ne dépasse pas l'intensité nécessaire à l'établissement d'une communication satisfaisante.

This device complies with Industry Canada licence-exempt RSS standard(s). Operation is subject to the following two conditions: (1) this device may not cause interference, and (2) this device must accept any interference, including interference that may cause undesired operation of the device.

[1]See https://lifesafetypower.com/docs/im_fpv-standard.pdf.

Le présent appareil est conforme aux CNR d'Industrie Canada applicables aux appareils radio exempts de licence. L'exploitation est autorisée aux deux conditions suivantes : (1) l'appareil ne doit pas produire de brouillage, et (2) l'utilisateur de l'appareil doit accepter tout brouillage radioélectrique subi, même si le brouillage est susceptible d'en compromettre le fonctionnement.

IC Company Number: 25142

Warnings

- Disconnect power before servicing.
- Do not plug into an outlet controlled by an on/off switch.
- Powering the power supply with 230V requires jumper modification. See the power supply data sheet for more information.

Specifications

Note: For the hardware specifications, refer to the product datasheets on page 9.

Table 2 Electrical specifications of Avigilon hardware

Video Reader Pro (OP-VID-PRO-RDR)	Input Voltage: 802.3af PoE (48VDC) Power Consumption: 7.8W
Video Intercom Reader Pro (OP-VID-PRO-INT)	Input Voltage: 802.3af PoE (48VDC) Power Consumption: 10.8W OP-VID-PRO-RDR: FCC ID: 2APJVOPVRC OP-VID-PRO-INT: FCC ID: 2APJVOPVNRC
Smart Reader v2 (OP-R2X-STND, OP-R2X-MULL)	12-24VDC, 0.25A @ 12V, 0.12A @ 24V OP-R2-STND: FCC ID: 2APJVOPR2LHF OP-R2-MULL: FCC ID: 2APJVOPR2LHF
Embedded USB Smart Reader (OP-R2X-EMBD)	12-24VDC, 0.25A @ 12V, 0.12A @ 24V, 5V USB FCC ID: 2APJVOPR2LHF
Smart Keypad Reader (OP-RKP-STND, OP-RKP-MULL)	12-24VDC, 0.25A @ 12V, 0.12A @ 24V OP-RKP-STND: FCC ID: 2APJVOPRKP OP-RKP-MULL: FCC ID: 2APJVOPRKPM
4 Door Controller (OP-AS-01/OP-4ECTR)	10-14VDC, 1A
16 I/O Elevator Board (OP-16EM)	12-24VDC, 0.35A @ 12V, 0.2 @ 24V
4-Port Board (OP-EX-4E)	12-24VDC, 0.4A @ 24V
8-Port Board (OP-EX-8E)	12-24VDC, 0.6A @ 24V
Access Control Core (OP-ACC)	12-24VDC, 0.4A @ 12V, 0.2A @ 24V Contains FCC ID: 2ABCB-RPI4B
Smart Hub with 12/24V Supply (OP-4ESH-24V)	120V, 0.7A or 230V, 0.3A, 50/60 Hz