RF Test Report

Applicant	:	OpenPath Security, Inc.
Product Name	:	Intercom Touch
Trade Name	:	Avigilon
Model Number	:	OP-VID-TSN-7
Applicable Standard	:	FCC 47 CFR PART 15 SUBPART C ANSI C63.10:2020
Received Date	:	Nov. 24, 2025
Test Period	:	Nov. 27, 2025 ~ Dec. 10, 2025
Issued Date	:	Jan. 22, 2026

Issued by

Eurofins E&E Wireless Taiwan Co., Ltd.
No. 140-1, Changan Street, Bade District,
Taoyuan City, Taiwan (R.O.C.)
Tel：+886-3-2710188 / Fax：+886-3-2710190

Taiwan Accreditation Foundation accreditation number: 1330
Frequency Range: 9 kHz to 325 GHz
Bade test site：
Test Firm Registration Number: 226252
Test Firm Designation Number: TW0010
Wugu test site：
Test Firm Registration Number: 191812
Test Firm Designation Number: TW0034

Note:
1.The test results are valid only for samples provided by customers and under the test conditions described in this report.
2.This report shall not be reproduced except in full, without the written approval of Eurofins E&E Wireless Taiwan Co., Ltd.
3.The relevant information is provided by customers in this test report. According to the correctness, appropriateness or completeness of the information provided by the customer, if there is any doubt or error in the information which affects the validity of the test results, the laboratory does not take the responsibility.

Revision History

Rev.	Issued Date	Description	Revised by
00	Jan. 22, 2026	Initial Issue	Snow Wang

Verification of Compliance

Applicant	:	OpenPath Security, Inc.
Product Name	:	Intercom Touch
Trade Name	:	Avigilon
Model Number	:	OP-VID-TSN-7
FCC ID	:	2APJVOPTSN
Applicable Standard	:	FCC 47 CFR PART 15 SUBPART C ANSI C63.10:2020
Test Result	:	Complied
Issued By	:	Eurofins E&E Wireless Taiwan Co., Ltd. No. 140-1, Changan Street, Bade District, Taoyuan City, Taiwan (R.O.C.) Tel：+886-3-2710188 / Fax：+886-3-2710190 Taiwan Accreditation Foundation accreditation number: 1330

Testing Laboratory 1330

Eurofins E&E Wireless Taiwan Co., Ltd. tested the above equipment in accordance with the requirements set forth in the above standards. All indications of Pass/Fail in this report are opinions expressed by Eurofins E&E Wireless Taiwan Co., Ltd. based on interpretations and/or observations of test results. The test results show that the equipment tested is capable of demonstrating compliance with the requirements as documented in this report.

Approved By : Kai Yu Yang

TABLE OF CONTENTS

1 General Information 5
1.1. Summary of Test Result 5
1.2. Testing Location 6
1.3. Measurement Uncertainty 6
1.4. Test Site Environment 6
2 EUT Description 7
3 Test Methodology 8
3.1. Mode of Operation 8
3.2. EUT Test Step 8
3.3. Configuration of Test System Details 9
3.4. Test Instruments 10
4 Measurement Procedure 12
4.1. AC Power Line Conducted Emission Measurement 12
4.2. Radiated Emission Measurement 14
4.3. Frequency Stability Measurement 17
4.4. 20 dB Bandwidth Measurement 18
4.5. Antenna Requirement 19
5 Test Results 20
5.1. Conducted Emission 20
5.2. Radiated Emission Measurement 22
5.3. Conducted Test Results 30

Appendix A. Test Setup Photographs

1 General Information

1.1. Summary of Test Result

Standard	Item	Results	Remark
15.203	Antenna Requirement	Meet Require	---
15.207(a)	Conducted Emissions Voltage	PASS	---
15.225 (a), (b), (c), (d) 15.209	Radiated Emission Limits	PASS	---
15.225(e)	Frequency Stability	PASS	---
15.215(c)	20 dB Bandwidth	-----	---
CFR 47 Part 15.225 / ANSI C63.10:2020			

Standard	Description
CFR47, Part 15, Subpart C	Intentional Radiators
ANSI C63.10: 2020	American National Standard of Procedures for Compliance Testing of Unlicensed Wireless Devices

Decision Rule

■ Uncertainty is not included.

☐ Uncertainty is included.

1.2. Testing Location

Lab Name: Eurofins E&E Wireless Taiwan Co., Ltd.

Site Address: ☐ No. 140-1, Changan Street, Bade District, Taoyuan City, Taiwan (R.O.C.)

Site Address: ■ No. 2, Wuquan 5th Rd. Wugu Dist., New Taipei City, Taiwan (R.O.C.)

1.3. Measurement Uncertainty

Test Item	Frequency	Uncertainty	
		BD	WG
Conducted Emission	150 kHz ~ 30 MHz	2.7 dB	2.6 dB
RF Bandwidth		4.5 %	4.5 %
Frequency Stability		1.3×10^{-7}	1.3×10^{-7}

Test Item	Frequency	Uncertainty				
		96601-BD	96603-BD	96602-WG	96603-WG	96604-WG
Radiated Emission	9 kHz ~ 30 MHz	1.8 dB	1.8 dB	1.6 dB	1.6 dB	1.7 dB
	30 MHz ~ 1000 MHz	4.7 dB	4.6 dB	4.7 dB	4.7 dB	4.5 dB
	1000 MHz ~ 18000 MHz	4.4 dB	4.5 dB	4.5 dB	4.7 dB	5.0 dB
	18000 MHz ~ 26500 MHz	3.6 dB	3.8 dB	3.8 dB	4.0 dB	4.3 dB
	26500 MHz ~ 40000 MHz	3.9 dB	3.9 dB	4.0 dB	4.0 dB	4.4 dB

1.4. Test Site Environment

Items	Required (IEC 60068-1)	Interval(*)
Temperature (°C)	15-35	20-30
Humidity (%RH)	25-75	45-75

(*)The measurement ambient temperature is within this range.

2 EUT Description

The product specifications of the EUT presented in the report are declared by the manufacturer who shall take full responsibility for the authenticity

Applicant	OpenPath Security, Inc. 600 Corporate Pointe Suite 400 Culver City California 90230 United States
Product Name	Intercom Touch
Trade Name	Avigilon
Model Number	OP-VID-TSN-7
FCC ID	2APJVOPTSN
Frequency Range	13.56 MHz
Modulation Type	ASK
Number of Channels	1 Channel
Data Rate	Type A: 106 kbit/s
Antenna Type	Loop Antenna
Operate Temp. Range	0 ~ 50 ℃
EUT Power Rating	12 Vdc, 2.5 A， 24 Vdc, 1.5 A

Note：All measurements were performed radiated and therefore additional antenna gain is not required.

Testing Sample No.	
Test Item	Sample Number
Radiation	C25N372_A008
Conducted	C25N372_A008
Normal	C25N372_A008

3 Test Methodology

3.1. Mode of Operation

The following test mode(s) were scanned during the preliminary test：

Pre-Test Mode	Final-Test Mode
Transmit Mode	V
Receive Mode	V

Eurofins has verified the construction and function in typical operation. All the test modes were carried out with the EUT in normal operation.

3.2. EUT Test Step

1.	Setup the EUT shown on “Configuration of Test System Details.”
2.	Turn on the power of all equipment.
3.	The EUT will start to operate function.

3.3. Configuration of Test System Details

Conduction Emission

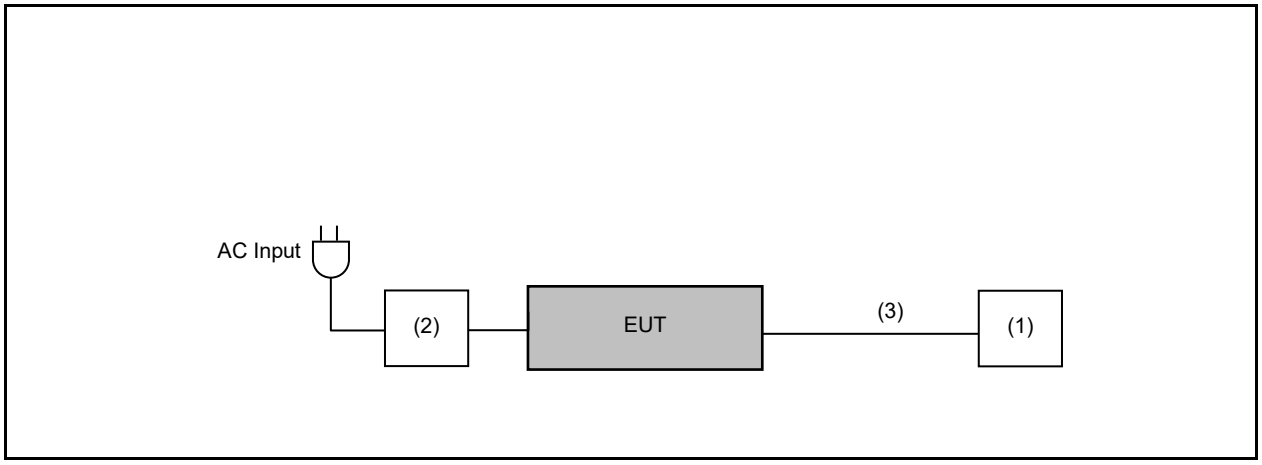

Radiated Emissions

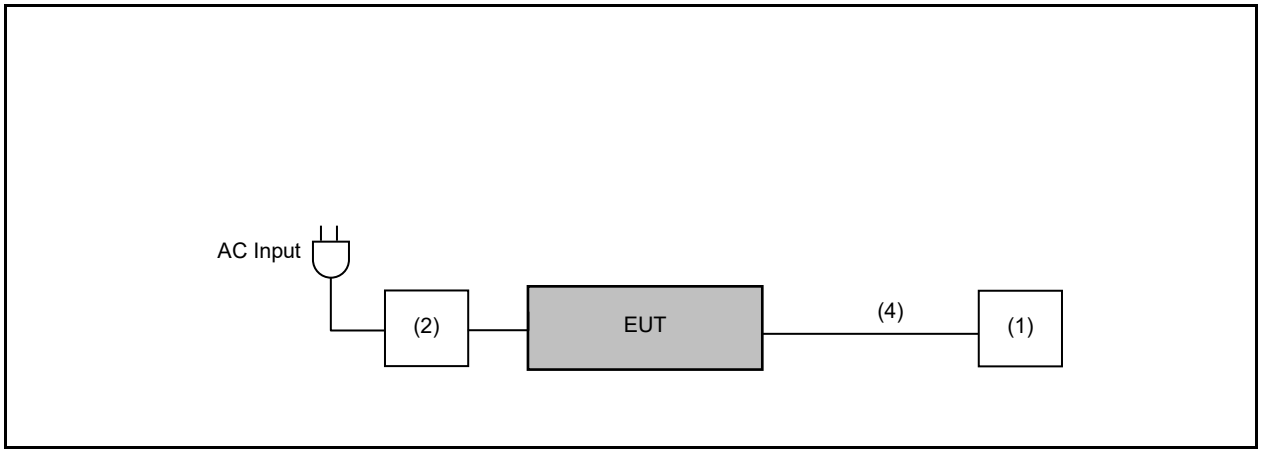

Product		Manufacturer	Model Number	Serial Number	Power Cord
(1)	Notebook	DELL	Latitude 5420	--	--
(2)	ADP	I.T.E. POWER SUPPLY	MU30AY120250-A1	---	---
(3)	RJ45 CABLE	SIN CYUAN	SC-E003	---	---
(4)	RJ45 CABLE	SIN CYUAN	SC-E010	---	---

3.4. Test Instruments

For Conducted
Test Period: Nov. 27 ~ Dec. 10, 2025
Testing Engineer: Ian Lin

Test Site		RF03-WG				
Use	Equipment	Manufacturer	Model Number	Serial Number	Cal. Date	Cal. Period
☒	Spectrum Analyzer (10 Hz~44 GHz)	R&S	FSV3044	101255	Dec. 18, 2024	1 year
☒	Power Supply	Gwinstek	PLR60-6	GEV172753	Nov. 14, 2025	1 year
☒	Temperature & Humidity Chamber	GiantForce	GTH-408-40-CP-SD	MAA2202-001	Jan. 02, 2025	1 year

For Radiated Emissions
Test Period: Dec. 1, 2025 ~ Dec. 2, 2025
Testing Engineer: Marin Lee

Radiation test sites		Semi Anechoic Room 96602-WG				
Use	Equipment	Manufacturer	Model Number	Serial Number	Cal. Date	Cal. Period
☒	LOOP Antenna (9 kHz~30 MHz)	Schwarzbeck Mess-Elektronik	FMZB 1513-60	1513-60-031	Mar. 6, 2025	1 year
☒	Trilog Broadband Antenna (30 MHz~1 GHz)	Schwarzbeck Mess-Elektronik	VULB9168	01276	Jan. 20, 2025	1 year
☒	Spectrum Analyzer (10 Hz~44 GHz)	KEYSIGHT	N9020B	MY60112362	Jan. 16, 2025	1 year
☒	Pre-Amplifier	Agilent	8447D	2944A10961	Jul. 10, 2025	1 year
☒	Coaxial Cable (9 kHz~1000 MHz)	EMCI	EMCCFD400-NM-NM-2000	211006	Nov. 7, 2025	1 year
☒	Coaxial Cable (9 kHz~1000 MHz)	EMCI	EMCCFD400-NM-NM-2000	211007	Nov. 7, 2025	1 year
☒	Coaxial Cable (9 kHz~1000 MHz)	EMCI	EMCCFD400-NM-NM-6000	211015	Nov. 7, 2025	1 year
☒	Software	R_RAM	V1.3	N/A	N.C.R.	---

Note: N.C.R. = No Calibration Request

For Conduction Emissions
Test Period: Dec. 2, 2025
Testing Engineer: Marin Lee

Radiation test sites		Conducted Emission Measurement Conduction01-WG				
Use	Equipment	Manufacturer	Model Number	Serial Number	Cal. Date	Cal. Period
☒	Test Receiver	R&S	ESR26	101775	Nov 20, 2025	1 year
☒	LISN	R&S	ENV216	101041	Apr 7, 2025	1 year
☒	Cable	EMCI	EMCCFD300-BM-NM-4000	220402	Jun 19, 2025	1 year
☒	Software	ELEKTRA	94.50.4	N.A.	N.C.R.	N.C.R.

Note: N.C.R. = No Calibration Request

4 Measurement Procedure

4.1. AC Power Line Conducted Emission Measurement

■ **Limit**

Frequency (MHz)	Quasi-peak	Average
0.15 - 0.5	66 to 56	56 to 46
0.50 - 5.0	56	46
5.0 - 30.0	60	50

■ **Test Setup**

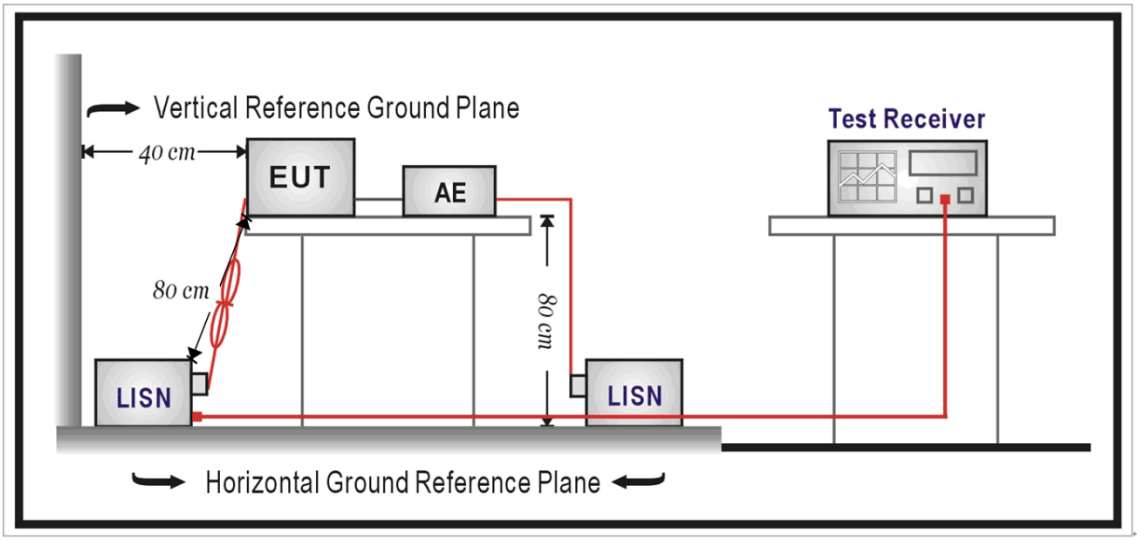

■ **Test Procedure**

The EUT and simulators are connected to the main power through a line impedance stabilization network (L.I.S.N.). This provides a 50 Ω// 50 uH coupling impedance for the measuring equipment. The peripheral devices are also connected to the main power through a LISN that provides a 50 Ω// 50 uH coupling impedance with 50 ohm termination.

Tabletop device shall be placed on a non-conducting platform, of nominal size 1 m by 1.5 m, raised 80 cm above the reference ground plane. The wall of screened room shall be located 40 cm to the rear of the EUT. Other surfaces of tabletop or floor standing EUT shall be at least 80 cm from any other ground conducting surface including one or more LISNs. For floor-standing device shall be placed under the EUT with a 12 mm insulating material.

Conducted emissions were investigated over the frequency range from 0.15 MHz to 30 MHz using a resolution bandwidth of 9 kHz. The equipment under test (EUT) shall be meet the limits in section 4.1, as applicable, including the average limit and the quasi-peak limit when using respectively, an average detector and quasi-peak detector measured in accordance with the methods described of related standard. When all of peak value were complied with quasi-peak and average limit from 150 kHz to 30 MHz then quasi-peak and average measurement was unnecessary.

The AMN shall be placed 0.8 m from the boundary of the unit under test and bonded to a ground reference plane for AMNs mounted on top of the ground reference plane. This distance is between the closest points of the AMN and the EUT. All other units of the EUT and associated equipment shall be at least 0.8 m from the AMN. If the mains power cable is longer than 1 m then the cable shall be folded back and forth at the centre of the lead to form a bundle no longer than 0.4 m. All of interconnecting cables that hang closer than 40 cm to the ground plane shall be folded back and forth in the center forming a bundle 30 cm to 40 cm long. All of EUT and AE shall be separate place more than 0.1 m. All 50 Ω ports of the LISN shall be resistively terminated into 50 Ω loads when not connected to the measuring instrument.

If the reading of the measuring receiver shows fluctuations close to the limit, the reading shall be observed for at least 15 s at each measurement frequency; the higher reading shall be recorded with the exception of any brief isolated high reading which shall be ignored.

4.2. Radiated Emission Measurement

■ **Limit**

According to §15.225,

(a) The field strength of any emissions within the band 13.553 – 13.567 MHz shall not exceed 15,848 microvolt / meter at 30 meters.

(b) Within the bands 13.410 – 13.553 MHz and 13.567 -13.710 MHz, the field strength of any emissions shall not exceed 334 microvolt / meter at 30 meters.

(c) Within the bands 13.110 – 13.410 MHz and 13.710 – 14.010 MHz the field strength of any emissions shall not exceed 106 microvolt / meter at 30 meters.

(d) The field strength of any emissions appearing outside of the 13.110 – 14.010 MHz and shall not exceed the general radiated emission limits in §15.209.

According to §15.225(a), except as provided elsewhere in this Subpart, the emissions from an intentional radiator shall not exceed the field strength levels specified in the following table:

Frequency (MHz)	Field Strength (μV/m at meter)	Measurement Distance (meter)
0.009 – 0.490	2400 / F (kHz)	300
0.490 – 1.705	24000 / F (kHz)	30
1.705 – 30.0	30	30
30 - 88	100**	3
88-216	150**	3
216-960	200**	3
Above 960	500	3

** Except as provided in paragraph (g), fundamental emissions from intentional radiators operating under this Section shall not be located in the frequency bands 54-72 MHz, 76-88 MHz, 174-216 MHz or 470-806 MHz. However, operation within these frequency bands is permitted under other sections of this Part, e.g., Sections 15.231 and 15.241.

■ **Setup**

9 kHz ~ 30 MHz

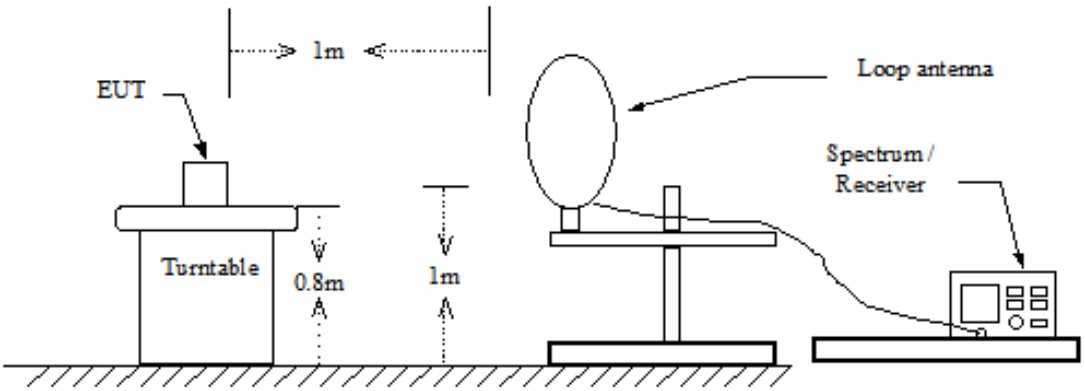

30 MHz ~ 1 GHz

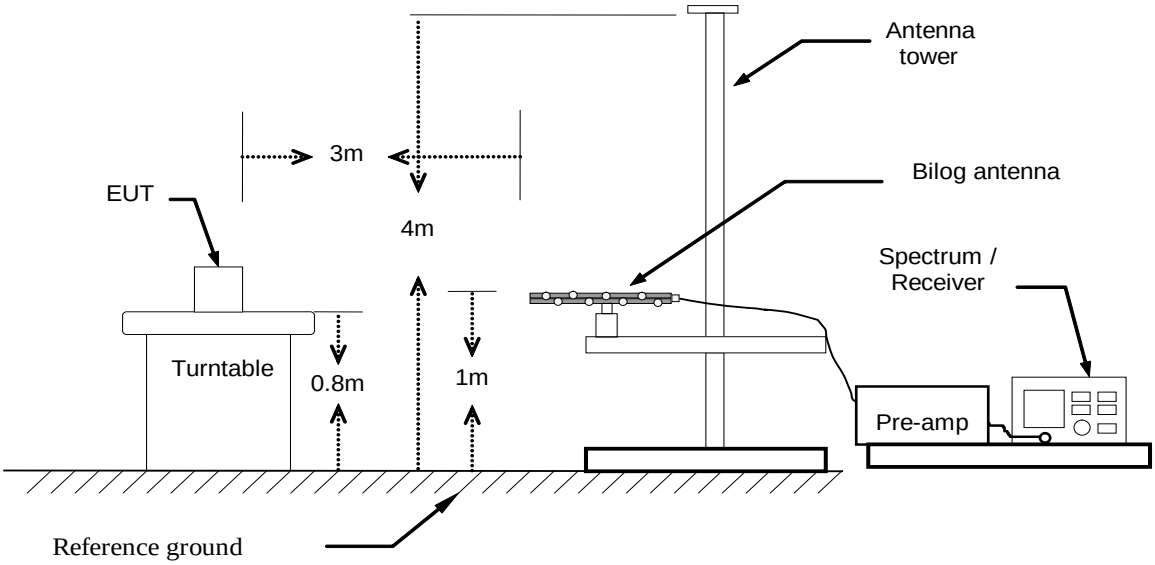

■ **Test Procedure**

Final radiation measurements were made on a three-meter Semi Anechoic Chamber. The EUT system was placed on a nonconductive turntable which is 0.8 meters height, top surface 1.0 x 1.5 meter. The spectrum was examined from 3 Hz to 44 GHz in order to cover the whole spectrum below 10th harmonic which could generate from the EUT. During the test, EUT was set to transmit continuously.
For measurements below 30 MHz the resolution bandwidth is set to 10 kHz for peak detection measurements or 9 kHz for quasi-peak detection measurements. The video bandwidth is 3 times of the resolution bandwidth.
For measurements below 1 GHz the resolution bandwidth is set to 100 kHz for peak detection measurements or 120 kHz for quasi-peak detection measurements. Peak detection is used unless otherwise noted as quasi-peak.
For measurements above 1 GHz the resolution bandwidth is set to 1 MHz, and then the video bandwidth is set to 3 MHz for peak measurements and 10 Hz for average measurements.
A nonconductive material surrounded the EUT to supporting the EUT for standing on tree orthogonal planes. At each condition, the EUT was rotated 360 degrees, and the antenna was raised and lowered from one to four meters to find the maximum emission levels. Measurements were taken using both horizontal and vertical antenna polarization. Biconilog/Horn Antenna were used in frequency 30 MHz to 18 GHz at a distance of 3 meter. Loop/Horn Antenna was used in frequency 9 kHz to 30 MHz and 18 to 26.5 GHz at a distance of 1 meter. The antenna at an angle toward the source of the emission. All test results were extrapolated to equivalent signal at 3 meters utilizing an inverse linear distance extrapolation Factor (20 dB/decade).

For testing above 1 GHz, the emission level of the EUT in peak mode was 20 dB lower than average limit (that means the emission level in peak mode also complies with the limit in average mode), then testing will be stopped and peak values of EUT will be reported, otherwise, the emissions will be measured in average mode again and reported.
Appropriate preamplifiers were used for improving sensitivity and precautions were taken to avoid overloading or desensitizing the spectrum analyzer. No post – detector video filters were used in the test.

The spectrum analyzer's 6 dB bandwidth was set to 1 MHz, and the analyzer was operated in the peak detection mode, for frequencies both below and up 1 GHz. The average levels were obtained by subtracting the duty cycle correction factor from the peak readings.
The following procedures were used to convert the emission levels measured in decibels referenced to 1 microvolt (dBuV) into field intensity in microvolt pre-meter (uV/m).
The actual field intensity in decibels referenced to 1 microvolt in to field intensity in microvolt per-meter (dBuV/m).

The actual field is intensity in referenced to 1 microvolt per meter (dBuV/m) is determined by algebraically adding the measured reading in dBuV, the antenna factor (dB), and cable loss (dB) and Subtracting the gain of preamplifier (dB) is auto calculate in spectrum analyzer.

(1) Amplitude (dBuV/m) = FI (dBuV) +AF (dBuV) +CL (dBuV)-Gain (dB)
FI= Reading of the field intensity.
AF= Antenna factor.
CL= Cable loss.
P.S Amplitude is auto calculate in spectrum analyzer.
(2) Actual Amplitude (dBuV/m) = Amplitude (dBuV)-Dis(dB)
The FCC specified emission limits were calculated according the EUT operating frequency and by following linear interpolation equations:
(a) For fundamental frequency : Transmitter Output < +30 dBm
(b) For spurious frequency : Spurious emission limits = fundamental emission limit /10

Data of measurement within this frequency range without mark in the table above means the reading of emissions are attenuated more than 20 dB below the permissible limits or the field strength is too small to be measured.

4.3. Frequency Stability Measurement

■ **Limit**

According to §15.207(e), the frequency tolerance of the carrier signal shall be maintained within +/- 0.01 % of the operating frequency over a temperature variation of –20 degrees to +50 degrees C at normal supply voltage, and for a variation in the primary supply voltage from 85 % to 115 % of the rated supply voltage at a temperature of 20 degrees C. For battery operated equipment, the equipment tests shall be performed using a new battery.

■ **Test Setup**

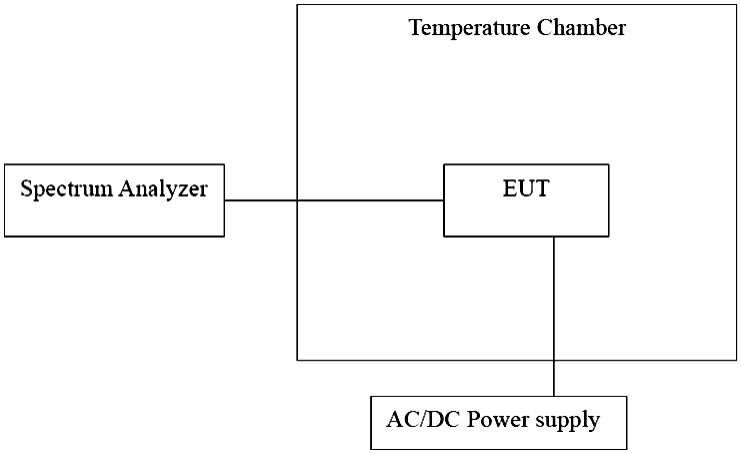

■ **Test Procedure**

1. Place the EUT on the table and set it in the transmitting mode.
2. Remove the antenna from the EUT and then connect a low loss RF cable from the antenna port to the spectrum analyzer.
3. Set the environment into appropriate environment.
4. Set the spectrum analyzer as RBW = 1 kHz, VBW = RBW, Span = 200 kHz, Sweep = auto.
5. Mark the peak frequency and measure the frequency tolerance using frequency counter function.
6. Repeat until all the results are investigated.

4.4. 20 dB Bandwidth Measurement

■ **Limit**

N/A

■ **Test Setup**

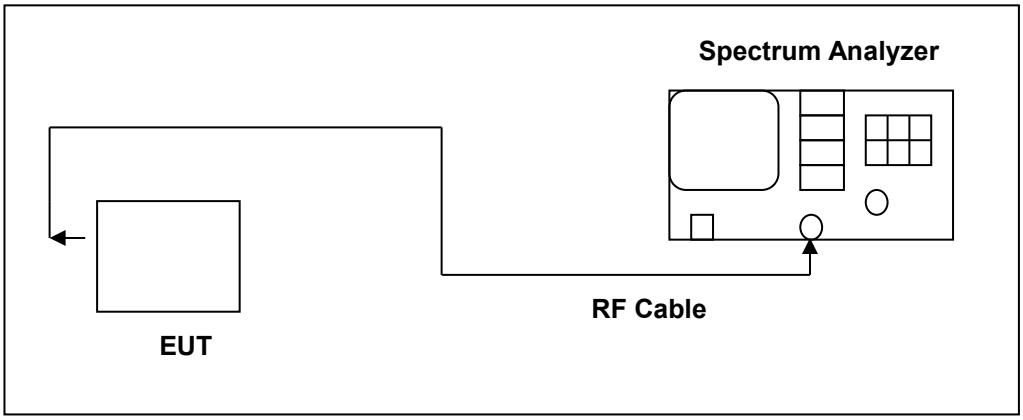

■ **Test Procedure**

For 20 dB Bandwidth:

Analyzer used the following settings:

1. Span = between 2 times and 5 times the OBW
2. RBW = 1 % to 5 % of the OBW (Not less than 0.1 kHz)
3. VBW ≥ 3 x RBW
4. Detector function = peak
5. Trace = max hold

The trace was allowed to stabilize. The EUT was transmitting at its maximum data rate. The marker-to-peak function was used to set the marker to the peak of the emission. The marker-delta function was used to measure 20 dB down one side of the emission. The marker-delta function and marker was moved to the other side of the emission until it was even with the reference marker. The marker-delta reading at this point was the 20 dB bandwidth of the emission.

4.5. Antenna Requirement

■ **Require**

An intentional radiator shall be designed to ensure that no antenna other than that furnished by the responsible party shall be used with the device. The use of a permanently attached antenna or of an antenna that uses a unique coupling to the intentional radiator shall be considered sufficient to comply with the provisions of this section. The manufacturer may design the unit so that a broken antenna can be replaced by the user, but the use of a standard antenna jack or electrical connector is prohibited.

■ **Antenna Connector Construction**

The antenna connector used in this product is internal antenna, cannot be replaced by the end-user.

See section 2 – antenna information.

5 Test Results

5.1. Conducted Emission

Standard:	Part 15.225	Line:	L1
Test item:	Conducted Emission	Power:	AC 120 V/60 Hz
Mode:	Transmit Mode		
Description:			

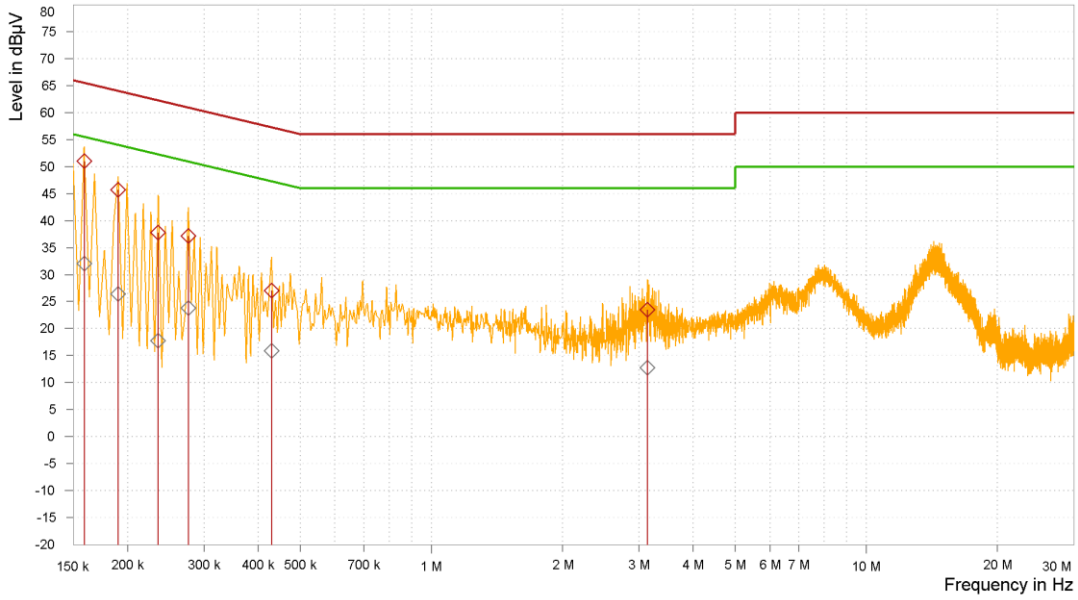

Rg	Frequency [MHz]	QP Result [dBµV]	QP Limit [dBµV]	QP Margin [dB]	AV Result [dBµV]	AV Limit [dBµV]	AV Margin [dB]	Correction factor [dB]	Line
1	0.159	50.98	65.52	14.54	32.01	55.52	23.51	9.69	L1
1	0.191	45.70	64.01	18.32	26.42	54.01	27.59	9.69	L1
1	0.236	37.73	62.25	24.53	17.74	52.25	34.51	9.69	L1
1	0.276	37.19	60.94	23.75	23.75	50.94	27.18	9.69	L1
1	0.429	27.07	57.27	30.20	15.90	47.27	31.37	9.70	L1
1	3.143	23.46	56.00	32.54	12.71	46.00	33.29	9.77	L1

Note: 1. Result (dBuV) = Correction factor (dB) + Reading(dBuV).

2. Correction factor (dB) = Cable loss (dB) + L.I.S.N. factor (dB).

Standard:	Part 15.225	Line:	N
Test item:	Conducted Emission	Power:	AC 120 V/60 Hz
Mode:	Transmit Mode		
Description:			

Rg	Frequency [MHz]	QP Result [dBµV]	QP Limit [dBµV]	QP Margin [dB]	AV Result [dBµV]	AV Limit [dBµV]	AV Margin [dB]	Correction factor [dB]	Line
1	0.168	50.27	65.06	14.79	31.46	55.06	23.60	9.66	N
1	0.218	41.69	62.91	21.23	24.05	52.91	28.86	9.66	N
1	0.245	39.01	61.94	22.93	23.09	51.94	28.85	9.66	N
1	0.263	35.29	61.35	26.07	16.59	51.35	34.76	9.66	N
1	0.303	37.19	60.16	22.97	29.54	50.16	20.62	9.66	N
1	0.704	24.83	56.00	31.17	17.16	46.00	28.84	9.67	N

Note: 1. Result (dBuV) = Correction factor (dB) + Reading(dBuV).

2. Correction factor (dB) = Cable loss (dB) + L.I.S.N. factor (dB).

5.2. Radiated Emission Measurement

Fundamental

Standard:	Part 15.225	Test Distance:	1 m
Test item:	Fundamental		
Mode:	Transmit Mode		
Ant. Polar.:	Horizontal		

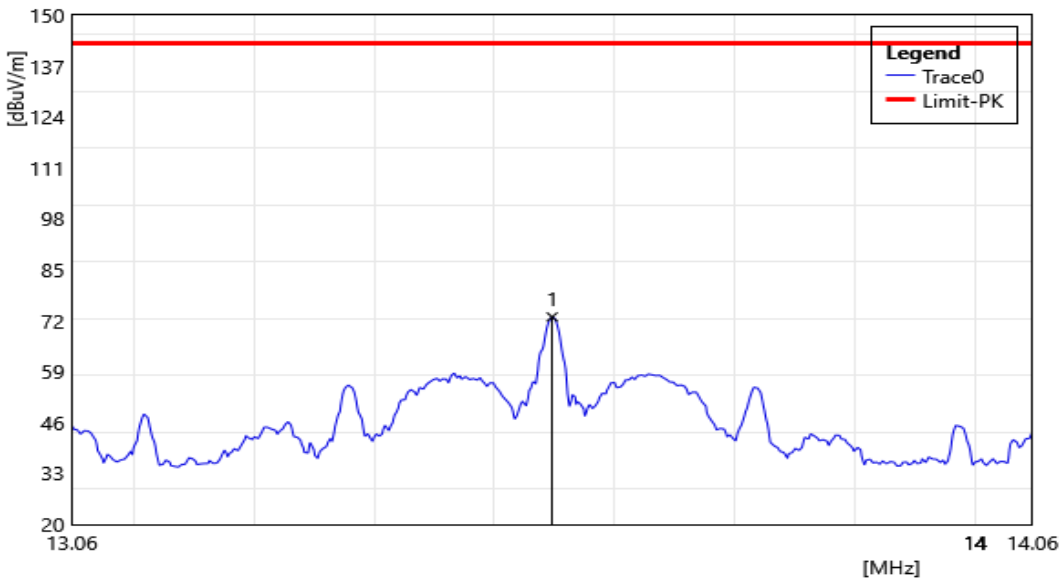

No.	Frequency (MHz)	Reading (dBuV)	Correct Factor (dB/m)	Near-Field Result (dBuV/m)	Derived Value (dBuV/m)	Limit (dBuV/m)	Margin (dB)	Remark
1	13.5600	51.28	21.71	72.99	32.52	84.00	-51.48	PEAK

Note: The level is measured at 1 meter and is converted into result at 30 meter.
The converted formula listed below:
Measure result (1 meter distance): a
Compute result (30 meter distance): A
$d_{near\ field} = \lambda/2\pi$，$d_{measure}$ = 1 meter distance
$A = a - 40*\log(d_{near\ field}/d_{measure}) - 20*\log(d_{limit}/d_{near\ field})$

Standard:	Part 15.225	Test Distance:	1 m
Test item:	Fundamental		
Mode:	Transmit Mode		
Ant. Polar.:	Vertical		

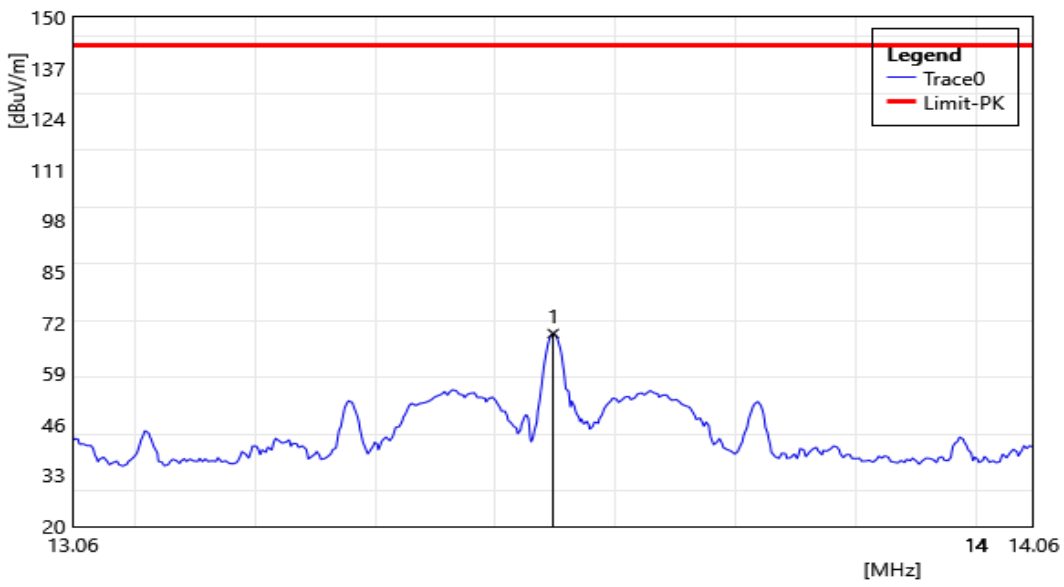

No.	Frequency (MHz)	Reading (dBuV)	Correct Factor (dB/m)	Near-Field Result (dBuV/m)	Derived Value (dBuV/m)	Limit (dBuV/m)	Margin (dB)	Remark
1	13.5600	47.54	21.71	69.25	28.78	84.00	-55.22	PEAK

Note: The level is measured at 1 meter and is converted into result at 30 meter.

Standard:	Part 15.225	Test Distance:	1 m
Test item:	MASK		
Mode:	Transmit Mode		
Ant. Polar.:	Horizontal		

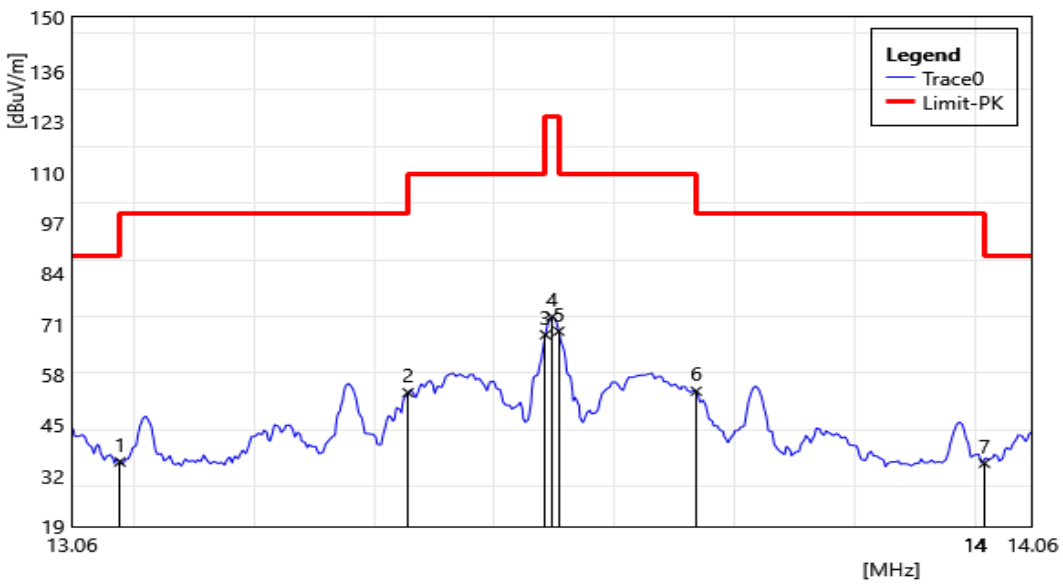

No.	Frequency (MHz)	Reading (dBuV)	Correct Factor (dB/m)	Near-Field Result (dBuV/m)	Derived Value (dBuV/m)	Limit (dBuV/m)	Margin (dB)	Remark
1	13.11	13.83	21.76	35.59	-5.17	29.54	-34.72	PEAK
2	13.41	31.70	21.73	53.43	12.86	40.50	-27.64	PEAK
3	13.55	46.62	21.71	68.33	27.86	50.50	-22.64	PEAK
4	13.57	47.52	21.71	69.23	28.76	50.50	-21.74	PEAK
5	13.71	32.10	21.70	53.80	13.43	40.50	-27.07	PEAK
6	14.01	13.60	21.67	35.27	-4.93	29.54	-34.47	PEAK

Note: The level is measured at 1 meter and is converted into result at 30 meter.
The converted formula listed below:
Measure result (1 meter distance): a
Compute result (30 meter distance): A
$d_{near\ field} = \lambda/2\pi$, $d_{measure}$ = 1 meter distance
$A = a - 40*\log(d_{near\ field}/d_{measure}) - 20*\log(d_{limit}/d_{near\ field})$

Standard:	Part 15.225	Test Distance:	1 m
Test item:	MASK		
Mode:	Transmit Mode		
Ant. Polar.:	Vertical		

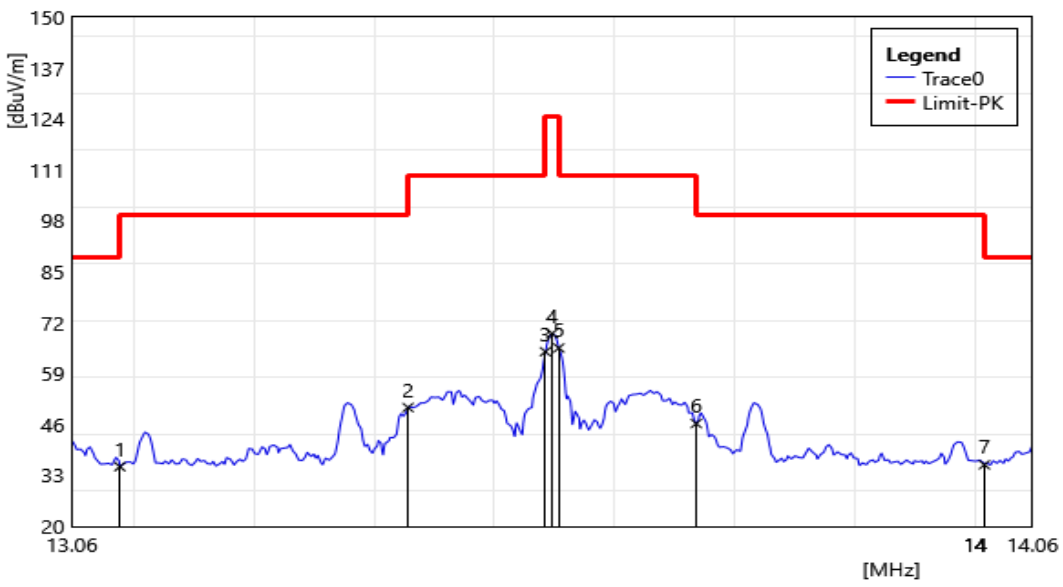

No.	Frequency (MHz)	Reading (dBuV)	Correct Factor (dB/m)	Near-Field Result (dBuV/m)	Derived Value (dBuV/m)	Limit (dBuV/m)	Margin (dB)	Remark
1	13.11	13.50	21.76	35.26	-5.50	29.54	-35.05	PEAK
2	13.41	28.64	21.73	50.37	9.80	40.50	-30.70	PEAK
3	13.55	42.91	21.71	64.62	24.15	50.50	-26.35	PEAK
4	13.57	43.86	21.71	65.57	25.10	50.50	-25.40	PEAK
5	13.71	24.58	21.70	46.28	5.91	40.50	-34.59	PEAK
6	14.01	14.09	21.67	35.76	-4.44	29.54	-33.98	PEAK

Note: The level is measured at 1 meter and is converted into result at 30 meter.

Harmonic

9 kHz ~ 30 MHz:

Standard:	Part 15.225	Test Distance:	300/30 m
Test item:	Harmonic		
Mode:	Transmit Mode		
Ant. Polar.:	Horizontal		

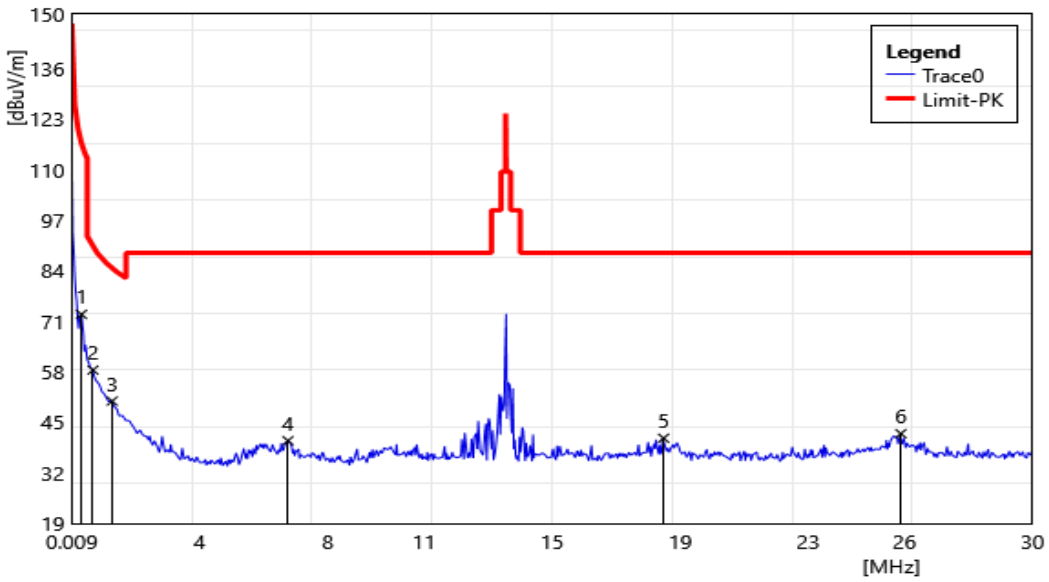

No.	Frequency (MHz)	Reading (dBuV)	Correct Factor (dB/m)	Near-Field Result (dBuV/m)	Derived Value (dBuV/m)	Limit (dBuV/m)	Margin (dB)	Remark
1	0.31	53.21	19.58	72.79	-20.50	17.78	-38.28	PEAK
2	0.67	38.82	19.64	58.46	-8.14	31.08	-39.22	PEAK
3	1.27	30.91	19.57	50.48	-10.57	25.53	-36.09	PEAK
4	6.76	19.04	21.24	40.28	-6.24	29.54	-35.78	PEAK
5	18.48	18.24	22.69	40.93	3.16	29.54	-26.39	PEAK
6	25.89	19.14	22.96	42.10	7.26	29.54	-22.28	PEAK

Note: The level is measured at 1 meter and is converted into result at 300 or 30 meter.

Standard:	Part 15.225	Test Distance:	300/30 m
Test item:	Harmonic		
Mode:	Transmit Mode		
Ant. Polar.:	Vertical		

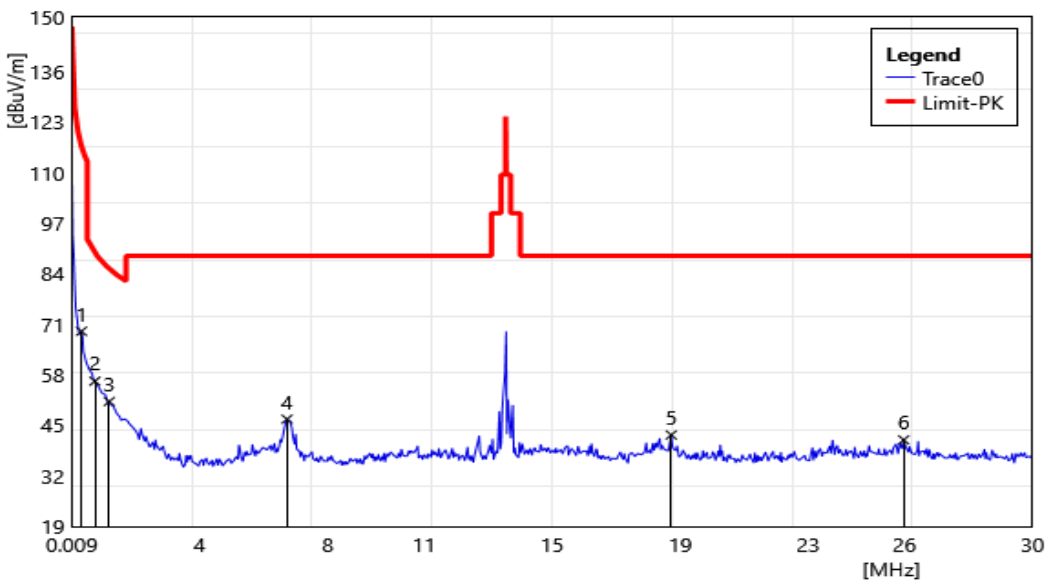

No.	Frequency (MHz)	Reading (dBuV)	Correct Factor (dB/m)	Near-Field Result (dBuV/m)	Derived Value (dBuV/m)	Limit (dBuV/m)	Margin (dB)	Remark
1	0.31	49.63	19.58	69.21	-24.08	17.78	-41.86	PEAK
2	0.73	36.77	19.60	56.37	-9.49	30.34	-39.82	PEAK
3	1.18	31.56	19.58	51.14	-10.54	26.17	-36.71	PEAK
4	6.73	25.37	21.24	46.61	0.04	29.54	-29.50	PEAK
5	18.72	19.80	22.73	42.53	4.86	29.54	-24.69	PEAK
6	25.98	18.37	22.92	41.29	6.45	29.54	-23.09	PEAK

Note: The level is measured at 1 meter and is converted into result at 300 or 30 meter.

30 MHz ~ 1 GHz:

Standard:	Part 15.225	Test Distance:	3 m
Test item:	Harmonic		
Mode:	Transmit Mode		
Ant. Polar.:	Horizontal		

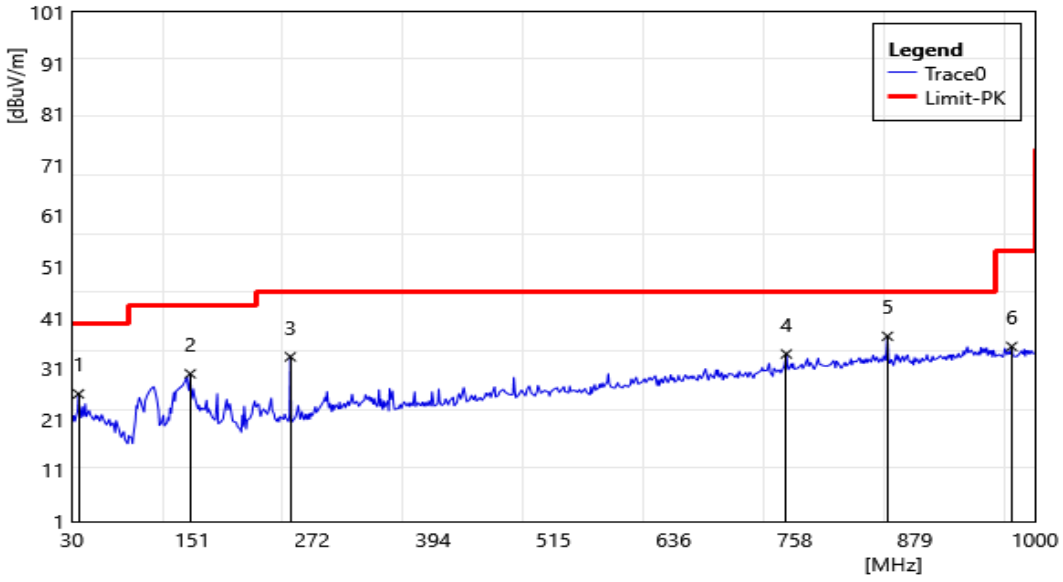

No.	Frequency (MHz)	Reading (dBuV)	Correct Factor (dB/m)	Result (dBuV/m)	Limit (dBuV/m)	Margin (dB)	Remark
1	36.79	34.75	-8.71	26.04	40.00	-13.96	QP
2	149.31	37.34	-7.34	30.00	43.50	-13.50	QP
3	250.19	41.68	-8.34	33.34	46.00	-12.67	QP
4	749.74	32.41	1.49	33.90	46.00	-12.10	QP
5	851.59	34.24	3.12	37.36	46.00	-8.64	QP
6	976.72	30.50	4.86	35.36	54.00	-18.64	QP

Standard:	Part 15.225	Test Distance:	3 m
Test item:	Harmonic		
Mode:	Transmit Mode		
Ant. Polar.:	Vertical		

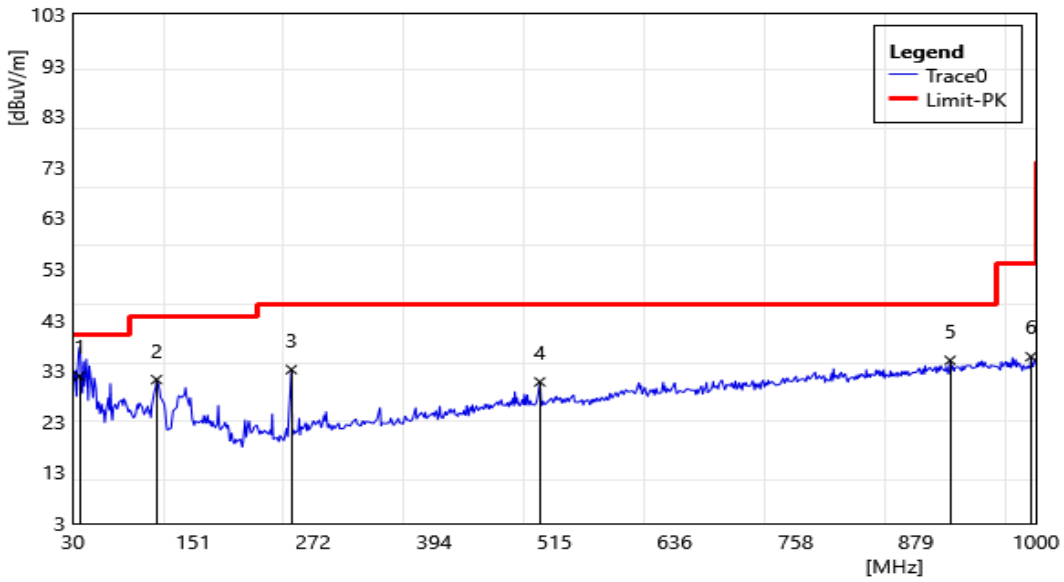

No.	Frequency (MHz)	Reading (dBuV)	Correct Factor (dB/m)	Result (dBuV/m)	Limit (dBuV/m)	Margin (dB)	Remark
1	36.79	40.60	-8.71	31.89	40.00	-8.11	QP
2	114.39	41.68	-10.44	31.24	43.50	-12.26	QP
3	250.19	41.55	-8.34	33.21	46.00	-12.79	QP
4	500.45	34.19	-3.39	30.80	46.00	-15.20	QP
5	913.67	30.92	4.12	35.04	46.00	-10.96	QP
6	995.15	30.60	5.14	35.74	54.00	-18.26	QP

5.3. Conducted Test Results

Frequency Stability Measurement

Temperature Variations

Test Mode	Transmit Mode						
Temp. (°C)	Voltage (VAC)	0 minute Frequency Tolerance (%)	2 minutes Frequency Tolerance (%)	5 minutes Frequency Tolerance (%)	10 minutes Frequency Tolerance (%)	Limit (%)	Result (Pass/Fail)
-20	V_{Nom}	0.0015	0.0015	0.0000	0.0015	±0.01	Pass
-10	V_{Nom}	0.0018	0.0018	0.0000	0.0000	±0.01	Pass
0	V_{Nom}	0.0018	0.0018	0.0018	0.0015	±0.01	Pass
10	V_{Nom}	0.0000	0.0015	0.0015	0.0018	±0.01	Pass
20	V_{Nom}	-0.0009	-0.0009	-0.0009	-0.0009	±0.01	Pass
30	V_{Nom}	0.0000	0.0000	0.0015	0.0015	±0.01	Pass
40	V_{Nom}	0.0015	0.0018	0.0018	0.0018	±0.01	Pass
50	V_{Nom}	0.0000	0.0000	0.0018	0.0000	±0.01	Pass

Voltage Variations

Test Mode	Transmit Mode						
Temp. (°C)	Voltage (VAC)	0 minute Frequency Tolerance (%)	2 minutes Frequency Tolerance (%)	5 minutes Frequency Tolerance (%)	10 minutes Frequency Tolerance (%)	Limit (%)	Result (Pass/Fail)
20	V_{Low}	0.0015	0.0000	0.0000	0.0000	±0.01	Pass
	V_{Nom}	-0.0009	-0.0009	-0.0009	-0.0009	±0.01	Pass
	V_{High}	0.0000	0.0000	0.0000	0.0015	±0.01	Pass

Note: $V_{Low}=V_{Nom}-15$ % ; $V_{High}=V_{Nom}+15$ %

20 dB Bandwidth Measurement

Test Mode	Transmit Mode
Frequency (MHz)	20 dB Bandwidth (kHz)
13.56	26.989

■ **Test Graphs**

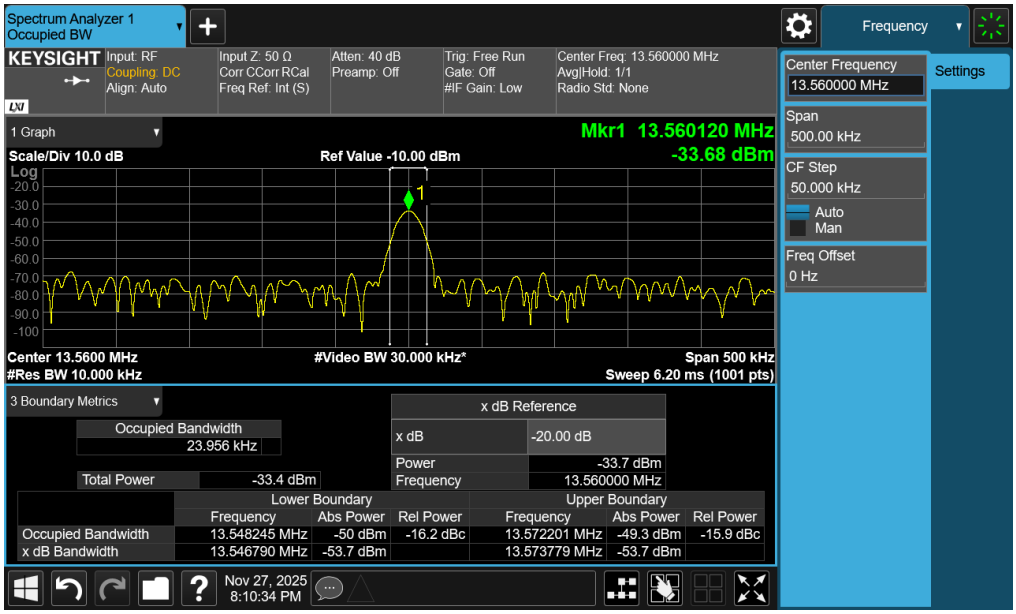

Remark: Because the measured signal is CW adjusting the RBW per C63.10 would not be practical since measured bandwidth will always follow the RBW and the result will be approximately twice the RBW.

---END---