FCC Test Report

Report No.: AGC03576180501FE01

FCC ID	:	2APJY-TT201
APPLICATION PURPOSE	:	Original Equipment
PRODUCT DESIGNATION	:	Travis Touch
BRAND NAME	:	Travis
MODEL NAME	:	TT201
CLIENT	:	Travis GT b.v.
DATE OF ISSUE	:	July 25, 2018
STANDARD(S)	:	FCC Part 15B Rules
REPORT VERSION	:	V1.1

Attestation of Global Compliance (Shenzhen) Co., Ltd

CAUTION:
This report shall not be reproduced except in full without the written permission of the test laboratory and shall not be quoted out of context.

The results shown in this test report refer only to the sample(s) tested unless otherwise stated and the sample(s) are retained for 30 days only. The document is issued by AGC, this document cannot be reproduced except in full with our prior written permission. The more details and the authenticity of the report will be confirmed at http://www.agc-cert.com.

Report Revise Record

Report Version	Revise Time	Issued Date	Valid Version	Notes
V1.0	/	July 03, 2018	Invalid	Initial Release
V1.1	1st	July 25, 2018	Valid	Revise Report P20-21

The results shown in this test report refer only to the sample(s) tested unless otherwise stated and the sample(s) are retained for 30 days only. The document is issued by AGC, this document cannot be reproduced except in full with our prior written permission. The more details and the authenticity of the report will be confirmed at http://www.agc-cert.com.

TABLE OF CONTENTS

1. VERIFICATION OF CONFORMITY 4
2. SYSTEM DESCRIPTION 4
3. MEASUREMENT UNCERTAINTY 6
4. PRODUCT INFORMATION 7
5. SUPPORT EQUIPMENT 8
6. TEST FACILITY 9
7. TEST ITEMS AND THE RESULTS 10
8. FCCLINE CONDUCTED EMISSION TEST 11
8.1. LIMITS OF LINE CONDUCTED EMISSION TEST 11
8.2. BLOCK DIAGRAM OF TEST SETUP 11
8.3. PROCEDURE OF LINE CONDUCTED EMISSION TEST 12
8.4. TEST RESULT OF LINE CONDUCTED EMISSION TEST 13
9. FCC RADIATED EMISSION TEST 15
9.1. EXCEPT FOR CLASS A DIGITAL DEVICES, THE FIELD STRENGTH OF RADIATED EMISSIONS FROM UNINTENTIONAL RADIATORS AT A DISTANCE OF 3 METERS SHALL NOT EXCEED THE FOLLOWING VALUES: 15
9.2. BLOCK DIAGRAM OF TEST SETUP 16
9.3. PROCEDURE OF RADIATED EMISSION TEST 17
9.4. TEST RESULT OF RADIATED EMISSION TEST 18
APPENDIX A: PHOTOGRAPHS OF TEST SETUP 22

The results shown in this test report refer only to the sample(s) tested unless otherwise stated and the sample(s) are retained for 30 days only. The document is issued by AGC, this document cannot be reproduced except in full with our prior written permission. The more details and the authenticity of the report will be confirmed at http://www.agc-cert.com.

1. VERIFICATION OF CONFORMITY

Applicant	Travis GT b.v.
Address	Stationsplein 45, 3013 AK Rotterdam, The Netherlands, Rotterdam, Netherlands
Manufacturer	Huano International Technology Limited
Address	29th Floor, Yinglong Building, # 6025 ShenNan Road, FuTian District, Shenzhen, China
Product Designation	Travis Touch
Brand Name	Travis
Test Model	TT201
Date of test	June 13, 2018~July 03, 2018
Deviation	None
Condition of Test Sample	Normal
Report Template	AGCRT-US-IT/AC

The above equipment was tested by Attestation of Global Compliance (Shenzhen) Co., Ltd. for compliance with the requirements set forth in the FCC Rules and Regulations Part 15, the measurement procedure according to ANSI C63.4:2014. This said equipment in the configuration described in this report shows the maximum emission levels emanating from equipment are within the compliance requirements.
The test results of this report relate only to the tested sample identified in this report.

Tested By Nice.xie

Nice Xie(Xie xiaosong) July 03, 2018

Reviewed By Bart Xie

Bart Xie(Xie Xiaobin) July 25, 2018

Approved By Forrest Lei

Forrest Lei(Lei Yonggang)
Authorized Officer July 25, 2018

The results shown in this test report refer only to the sample(s) tested unless otherwise stated and the sample(s) are retained for 30 days only. The document is issued by AGC, this document cannot be reproduced except in full with our prior written permission. The more details and the authenticity of the report will be confirmed at http://www.agc-cert.com.

2. SYSTEM DESCRIPTION

EUT test procedure:

1. Connect EUT and peripheral devices (PC) through USB port.
2. Power on the EUT, use the software to transfer data between EUT and PC.
3. Make sure the EUT operates normally during the test.

Test Mode

TEST MODE DESCRIPTION		
NO.	**TEST MODE DESCRIPTION**	**WORST**
1	USB (connection for data transferring)	V
Note: 1. V means EMI worst mode 2. USB cable is provided by AGC-Lab.		

The results shown in this test report refer only to the sample(s) tested unless otherwise stated and the sample(s) are retained for 30 days only. The document is issued by AGC, this document cannot be reproduced except in full with our prior written permission. The more details and the authenticity of the report will be confirmed at http://www.agc-cert.com.

3. MEASUREMENT UNCERTAINTY

The uncertainty is calculated using the methods suggested in the “Guide to the Expression of Uncertainty in measurement” (GUM) published by CISPR and ANSI.

- Uncertainty of Conducted Emission, Uc = ±3.2 dB
- Uncertainty of Radiated Emission below 1GHz, Uc = ±3.9 dB
- Uncertainty of Radiated Emission above 1GHz, Uc = ±4.8 dB

The results shown in this test report refer only to the sample(s) tested unless otherwise stated and the sample(s) are retained for 30 days only. The document is issued by AGC, this document cannot be reproduced except in full with our prior written permission. The more details and the authenticity of the report will be confirmed at http://www.agc-cert.com.

4. PRODUCT INFORMATION

Housing Type	Plastic and metal
Hardware Version	F01_MB_V1.11
Software Version	Alps-mp-n1.mp18-V2_len6739.36.n1
EUT Input Rating	DC3.8V by battery or DC 5V by Micro-USB

I/O Port Information (☒Applicable ☐Not Applicable)

Item	Equipment	Model No.	ID or Specification	Remark
1	Travis Touch	TT201	2APJY-TT201	EUT
2	Battery	FHP K664060P	DC3.8V/ 2500mAh	Accessory
3	USB	N/A	N/A	Accessory

The results shown in this test report refer only to the sample(s) tested unless otherwise stated and the sample(s) are retained for 30 days only. The document is issued by AGC, this document cannot be reproduced except in full with our prior written permission. The more details and the authenticity of the report will be confirmed at http://www.agc-cert.com.

5. SUPPORT EQUIPMENT

Device Type	Manufacturer	Model Name	Serial No.	Data Cable	Power Cable
PC	Apple Inc.	--	--	--	0.8m Unshielded
Adapter	Apple Inc.	--	--	--	1.25m Unshielded

Note: All the above equipment/cables were placed in worse case positions to maximize emission signals during emission test.

The results shown in this test report refer only to the sample(s) tested unless otherwise stated and the sample(s) are retained for 30 days only. The document is issued by AGC, this document cannot be reproduced except in full with our prior written permission. The more details and the authenticity of the report will be confirmed at http://www.agc-cert.com.

6. TEST FACILITY

Site	Attestation of Global Compliance (Shenzhen) Co., Ltd
Location	1-2F., Bldg.2, No.1-4, Chaxi Sanwei Technical Industrial Park, Gushu, Xixiang, Bao'an District B112-B113, Bldg.12, Baoan Bldg Materials Center, No.1 of Xixiang Inner Ring Road, Baoan District, Shenzhen 518012
NVLAP LAB CODE	600153-0
Designation Number	CN5028
Description	Attestation of Global Compliance(Shenzhen) Co., Ltd is accredited by National Voluntary Laboratory Accreditation program, NVLAP Code 600153-0

TEST EQUIPMENT OF CONDUCTED EMISSION TEST

Equipment	Manufacturer	Model	S/N	Cal. Date	Cal. Due
TEST RECEIVER	R&S	ESPI	101206	Jun.12, 2018	Jun.11, 2019
LISN	R&S	ESH2-Z5	100086	Aug.21, 2017	Aug.20, 2018

TEST EQUIPMENT OF RADIATED EMISSION TEST

Equipment	Manufacturer	Model	S/N	Cal. Date	Cal. Due
TEST RECEIVER	R&S	ESCI	10096	Jun.12, 2018	Jun.11, 2019
EXA Signal Analyzer	Aglient	N9010A	MY53470504	Dec.08, 2017	Dec.07, 2018
Horn antenna	SCHWARZBECK	BBHA 9170	#768	Sep.20, 2017	Sep.19, 2018
preamplifier	ChengYi	EMC184045SE	980508	Sep.15, 2017	Sep.14, 2018
Double-Ridged Waveguide Horn	ETS LINDGREN	3117	00034609	May.18, 2017	May.17, 2019
Broadband Preamplifier	SCHWARZBECK	BBV 9718	9718-205	Jun.12, 2018	Jun.11, 2019
ANTENNA	SCHWARZBECK	VULB9168	D69250	Sep.28, 2017	Sep.27, 2018

The results shown in this test report refer only to the sample(s) tested unless otherwise stated and the sample(s) are retained for 30 days only. The document is issued by AGC, this document cannot be reproduced except in full with our prior written permission. The more details and the authenticity of the report will be confirmed at http://www.agc-cert.com.

7. TEST ITEMS AND THE RESULTS

Test item	Test Requirement	Test Method	Class/Severity	Result
CONDUCTED EMISSION	FCC Part 15.107 Rules	ANSI C63.4:2014	Class B	Pass
RADIATED EMISSION	FCC Part 15.109 Rules	ANSI C63.4:2014	Class B	Pass

The results shown in this test report refer only to the sample(s) tested unless otherwise stated and the sample(s) are retained for 30 days only. The document is issued by AGC, this document cannot be reproduced except in full with our prior written permission. The more details and the authenticity of the report will be confirmed at http://www.agc-cert.com.

8. FCCLINE CONDUCTED EMISSION TEST

8.1. LIMITS OF LINE CONDUCTED EMISSION TEST

Frequency	Maximum RF Line Voltage	
	Q.P.(dBuV)	Average(dBuV)
150kHz-500kHz	66-56	56-46
500kHz-5MHz	56	46
5MHz-30MHz	60	50

Note:
1. The lower limit shall apply at the transition frequency.
2. The limit decreases linearly with the logarithm of the frequency in the range 0.15 MHz to 0.50MHz.

8.2. BLOCK DIAGRAM OF TEST SETUP

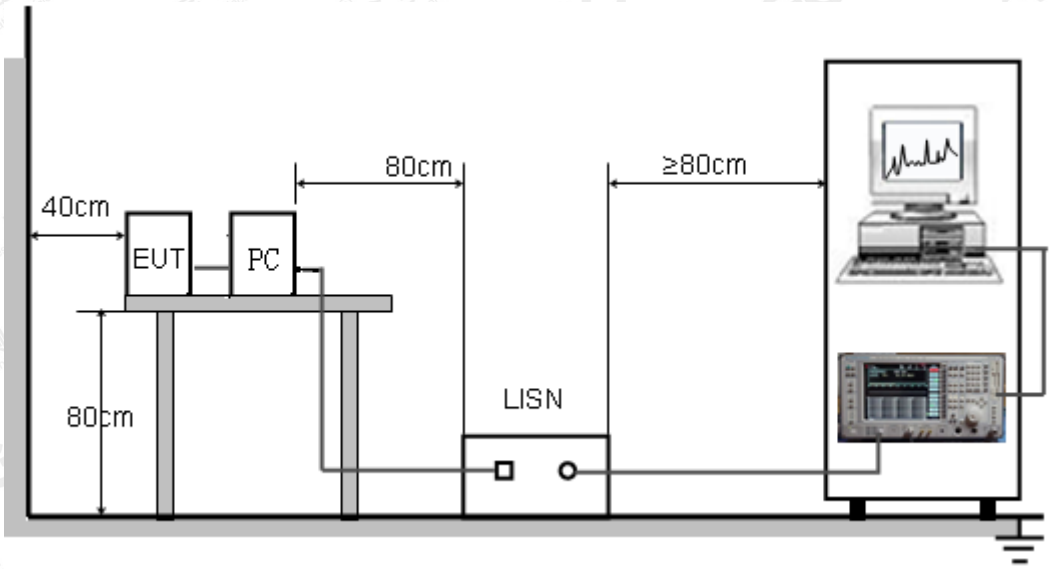

The results shown in this test report refer only to the sample(s) tested unless otherwise stated and the sample(s) are retained for 30 days only. The document is issued by AGC, this document cannot be reproduced except in full with our prior written permission. The more details and the authenticity of the report will be confirmed at http://www.agc-cert.com.

8.3. PROCEDURE OF LINE CONDUCTED EMISSION TEST

(1) The equipment was set up as per the test configuration to simulate typical actual usage per the user's manual. When the EUT is a tabletop system, a wooden table with a height of 0.8 meters is used and is placed on the ground plane as per ANSI C63.4 (see Test Facility for the dimensions of the ground plane used). When the EUT is a floor-standing equipment, it is placed on the ground plane which has a 3-12 mm non-conductive covering to insulate the EUT from the ground plane.

(2) Support equipment, if needed, was placed as per ANSI C63.4.

(3) All I/O cables were positioned to simulate typical actual usage as per ANSI C63.4.

(4) The EUT received DC5V power from PC with receive AC120V/60Hz power from a LISN.

(5) The EUT test program was started. Emissions were measured on each current carrying line of the EUT using a spectrum Analyzer / Receiver connected to the LISN powering the EUT. The LISN has two monitoring points: Line 1 (Hot Side) and Line 2 (Neutral Side). Two scans were taken: one with Line 1 connected to Analyzer / Receiver and Line 2 connected to a 50 ohm load; the second scan had Line 1 connected to a 50 ohm load and Line 2 connected to the Analyzer / Receiver.

(6) Analyzer / Receiver scanned from 150 kHz to 30MHz for emissions in each of the test modes.

(7) During the above scans, the emissions were maximized by cable manipulation.

(8) A scan was taken on both power lines, Line 1 and Line 2, recording at least the six highest emissions.

(9) Emission frequency and amplitude were recorded into a computer in which correction factors were used to calculate the emission level and compare reading to the applicable limit. If EUT emission level was less –2dB to the A.V. limit in Peak mode, then the emission signal was re-checked using Q.P and Average detector.

The test data of the worst case condition (mode 1) was reported on the Summary Data page.

The results shown in this test report refer only to the sample(s) tested unless otherwise stated and the sample(s) are retained for 30 days only. The document is issued by AGC, this document cannot be reproduced except in full with our prior written permission. The more details and the authenticity of the report will be confirmed at http://www.agc-cert.com.

8.4. TEST RESULT OF LINE CONDUCTED EMISSION TEST

LINE CONDUCTED EMISSION TEST-L

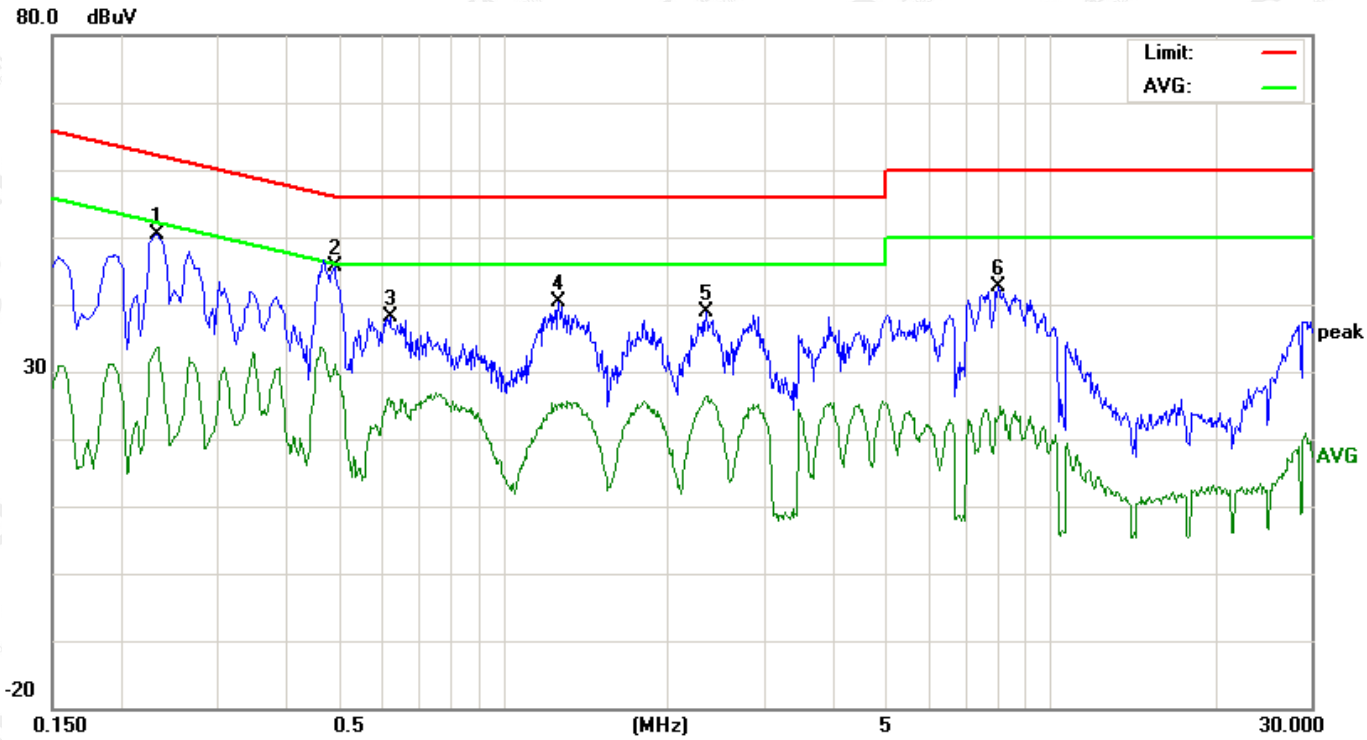

No.	Freq. (MHz)	Reading_Level (dBuV)			Correct Factor	Measurement (dBuV)			Limit (dBuV)		Margin (dB)		P/F	Comment
		Peak	QP	AVG	dB	Peak	QP	AVG	QP	AVG	QP	AVG		
1	0.2340	40.11		23.48	10.25	50.36		33.73	62.30	52.30	-11.94	-18.57	P	
2	0.4940	35.21		20.71	10.40	45.61		31.11	56.10	46.10	-10.49	-14.99	P	
3	0.6220	27.72		15.25	10.32	38.04		25.57	56.00	46.00	-17.96	-20.43	P	
4	1.2660	29.90		14.73	10.38	40.28		25.11	56.00	46.00	-15.72	-20.89	P	
5	2.3580	28.53		15.91	10.37	38.90		26.28	56.00	46.00	-17.10	-19.72	P	
6	8.0379	32.20		12.69	10.35	42.55		23.04	60.00	50.00	-17.45	-26.96	P	

The results shown in this test report refer only to the sample(s) tested unless otherwise stated and the sample(s) are retained for 30 days only. The document is issued by AGC, this document cannot be reproduced except in full with our prior written permission. The more details and the authenticity of the report will be confirmed at http://www.agc-cert.com.

LINE CONDUCTED EMISSION TEST-N

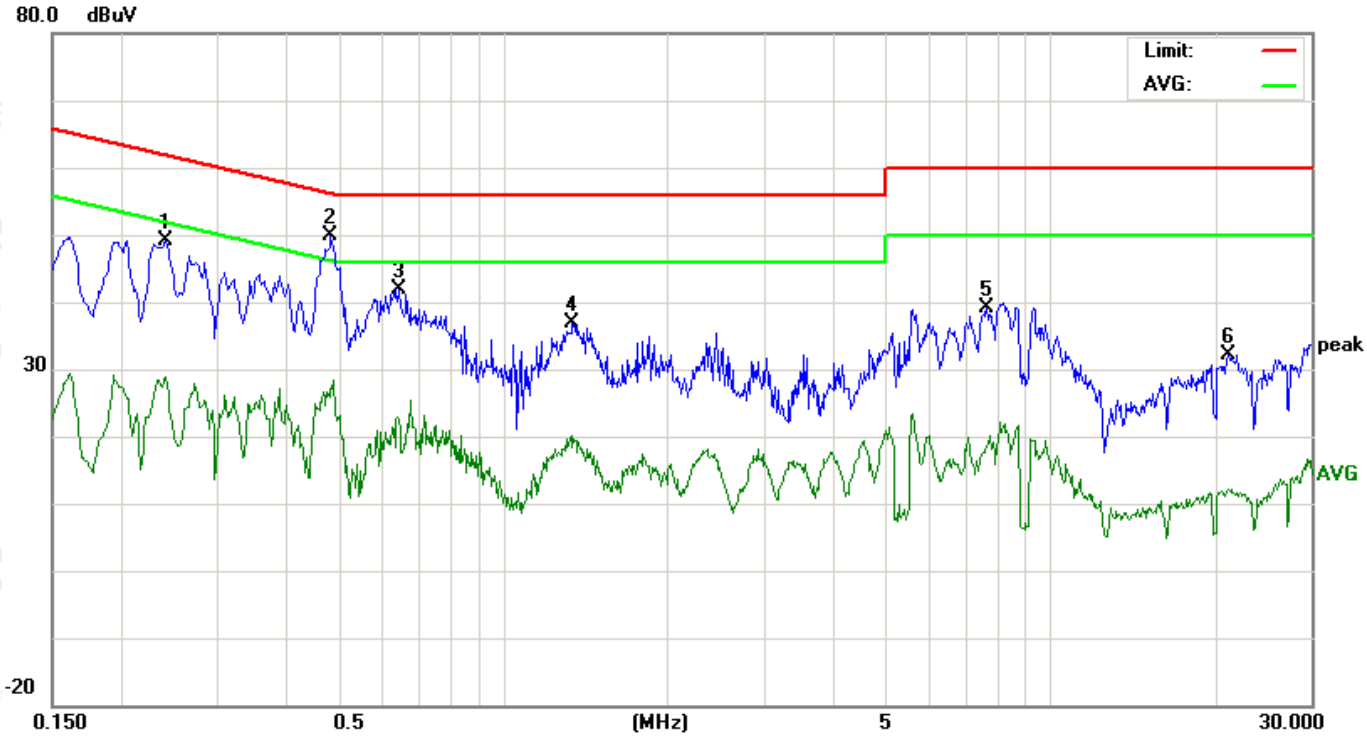

No.	Freq. (MHz)	Reading_Level (dBuV)			Correct Factor	Measurement (dBuV)			Limit (dBuV)		Margin (dB)		P/F	Comment
		Peak	QP	AVG	dB	Peak	QP	AVG	QP	AVG	QP	AVG		
1	0.2420	38.83		18.70	10.26	49.09		28.96	62.02	52.02	-12.93	-23.06	P	
2	0.4860	39.37		16.70	10.39	49.76		27.09	56.24	46.24	-6.48	-19.15	P	
3	0.6460	31.63		12.21	10.33	41.96		22.54	56.00	46.00	-14.04	-23.46	P	
4	1.3380	26.49		7.93	10.38	36.87		18.31	56.00	46.00	-19.13	-27.69	P	
5	7.6819	28.70		7.97	10.34	39.04		18.31	60.00	50.00	-20.96	-31.69	P	
6	21.1580	22.10		1.94	10.13	32.23		12.07	60.00	50.00	-27.77	-37.93	P	

RESULT: PASS

The results shown in this test report refer only to the sample(s) tested unless otherwise stated and the sample(s) are retained for 30 days only. The document is issued by AGC, this document cannot be reproduced except in full with our prior written permission. The more details and the authenticity of the report will be confirmed at http://www.agc-cert.com.

9. FCC RADIATED EMISSION TEST

9.1. EXCEPT FOR CLASS A DIGITAL DEVICES, THE FIELD STRENGTH OF RADIATED EMISSIONS FROM UNINTENTIONAL RADIATORS AT A DISTANCE OF 3 METERS SHALL NOT EXCEED THE FOLLOWING VALUES:

Frequency (MHz)	Distance (m)	Maximum Field Strength Limit (dBuV/m/ Q.P.)
30~88	3	40.0
88~216	3	43.5
216~960	3	46.0
Above 960	3	54.0

Note: The lower limit shall apply at the transition frequency.

9.1.1 The following table is the setting of spectrum analyzer and receiver:

Spectrum Parameter	Setting
Start ~Stop Frequency	9KHz~150KHz/RB 200Hz for QP
Start ~Stop Frequency	150KHz~30MHz/RB 9KHz for QP
Start ~Stop Frequency	30MHz~1000MHz/RB 120KHz for QP
Start ~Stop Frequency	1GHz~26.5GHz 1MHz/1MHz for Peak, 1MHz/10Hz for Average

Receiver Parameter	Setting
Start ~Stop Frequency	9KHz~150KHz/RB 200Hz for QP
Start ~Stop Frequency	150KHz~30MHz/RB 9KHz for QP
Start ~Stop Frequency	30MHz~1000MHz/RB 120KHz for QP

The results shown in this test report refer only to the sample(s) tested unless otherwise stated and the sample(s) are retained for 30 days only. The document is issued by AGC, this document cannot be reproduced except in full with our prior written permission. The more details and the authenticity of the report will be confirmed at http://www.agc-cert.com.

9.2. BLOCK DIAGRAM OF TEST SETUP

System Diagram of Connections between EUT and Simulators

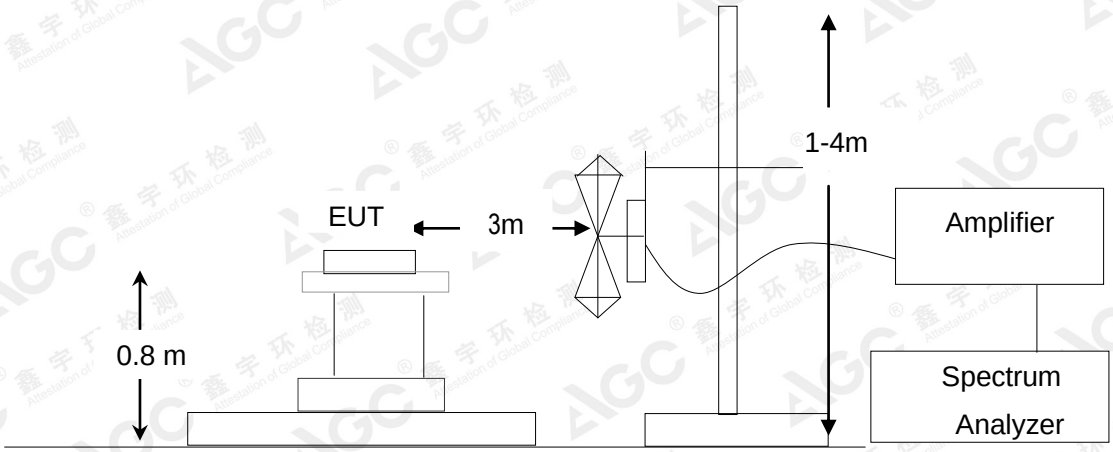

RADIATED EMISSION TEST SETUP ABOVE 1000MHz

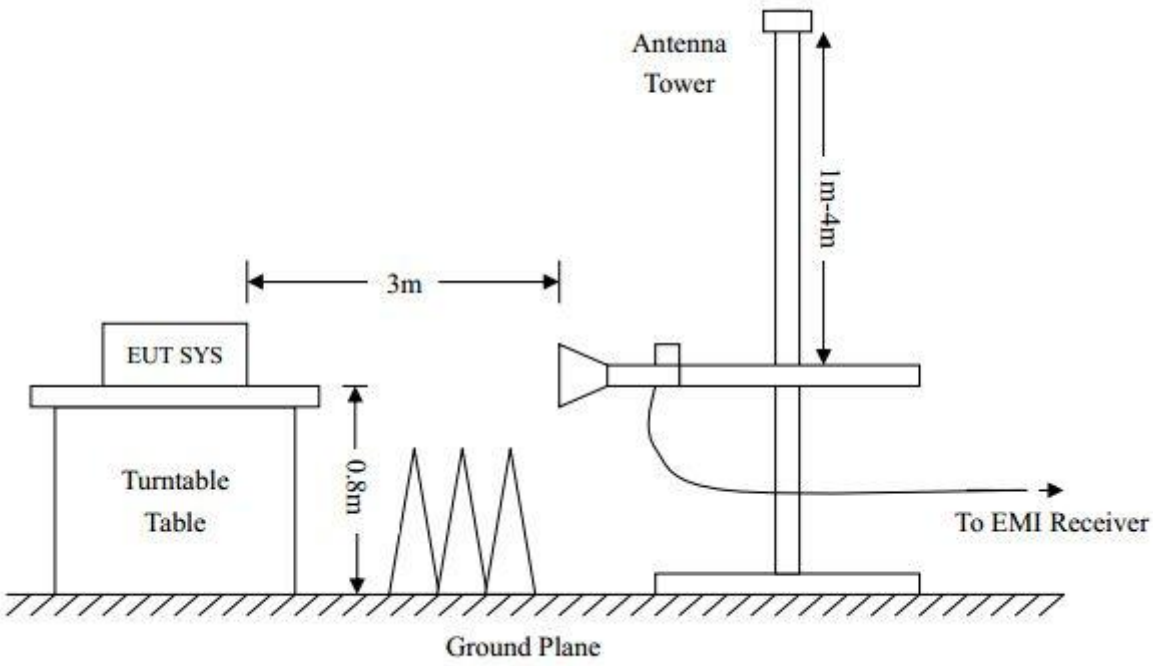

The results shown in this test report refer only to the sample(s) tested unless otherwise stated and the sample(s) are retained for 30 days only. The document is issued by AGC, this document cannot be reproduced except in full with our prior written permission. The more details and the authenticity of the report will be confirmed at http://www.agc-cert.com.

9.3. PROCEDURE OF RADIATED EMISSION TEST

1. Configure the EUT according to ANSI C63.4. The EUT was placed on the top of the turntable 0.8 meter above ground. The phase center of the receiving antenna mounted on the top of a height-variable antenna tower was placed 3 meters far away from the turntable.
2. Power on the EUT and all the supporting units. The turntable was rotated by 360 degrees to determine the position of the highest radiation.
3. The height of the broadband receiving antenna was varied between one meter and four meters above ground to find the maximum emissions field strength of both horizontal and vertical polarization.
4. For each suspected emissions, the antenna tower was scan (from 1 M to 4 M) and then the turntable was rotated (from 0 degree to 360 degrees) to find the maximum reading.
5. Set the test-receiver system to Peak or CISPR quasi-peak Detect Function with specified bandwidth under Maximum Hold Mode.
6. For emissions above 1GHz, use 1MHz RBW and 3MHz VBW for peak reading. Then 1MHz RBW and 3MHz VBW for average reading in spectrum analyzer. The EUT was placed on the top of the turntable 0.8 meter above ground. The phase center of the receiving antenna mounted on the top of a height-variable antenna tower was placed 3 meters far away from the turntable.
7. When the radiated emissions limits are expressed in terms of the average value of the emissions, and pulsed operation is employed, the measurement field strength shall be determined by averaging over one complete pulse train, including blanking intervals, as long as the pulse train does not exceed 0.1 seconds. As an alternative (provided the transmitter operates for longer than 0.1 seconds) or in cases where the pulse train exceeds 0.1 seconds, the measured field strength shall be determined from the average absolute voltage during a 0.1 second interval during which the field strength is at its maximum values.
8. If the emissions level of the EUT in peak mode was 3 dB lower than the average limit specified, then testing will be stopped and peak values of EUT will be reported, otherwise, the emissions which do not have 3 dB margin will be repeated one by one using the quasi-peak method for below 1GHz.
9. If the emission level of the EUT in peak mode was 10 dB lower than the limit specified, then testing could be stopped and the peak values of the EUT would be reported. Otherwise the emissions that did not have 10 dB margin would be re-tested one by one using peak, quasi-peak or average method as specified and then reported in a data sheet.
10. In case the emission is lower than 30MHz, loop antenna has to be used for measurement and the recorded data should be QP measured by receiver. High - Low scan is not required in this case.
11. The test data of the worst case condition (mode 1) was reported on the Summary Data page.

The results shown in this test report refer only to the sample(s) tested unless otherwise stated and the sample(s) are retained for 30 days only. The document is issued by AGC, this document cannot be reproduced except in full with our prior written permission. The more details and the authenticity of the report will be confirmed at http://www.agc-cert.com.

9.4. TEST RESULT OF RADIATED EMISSION TEST

RADIATED EMISSION TEST AT 3M DISTANCE-HORIZONTAL

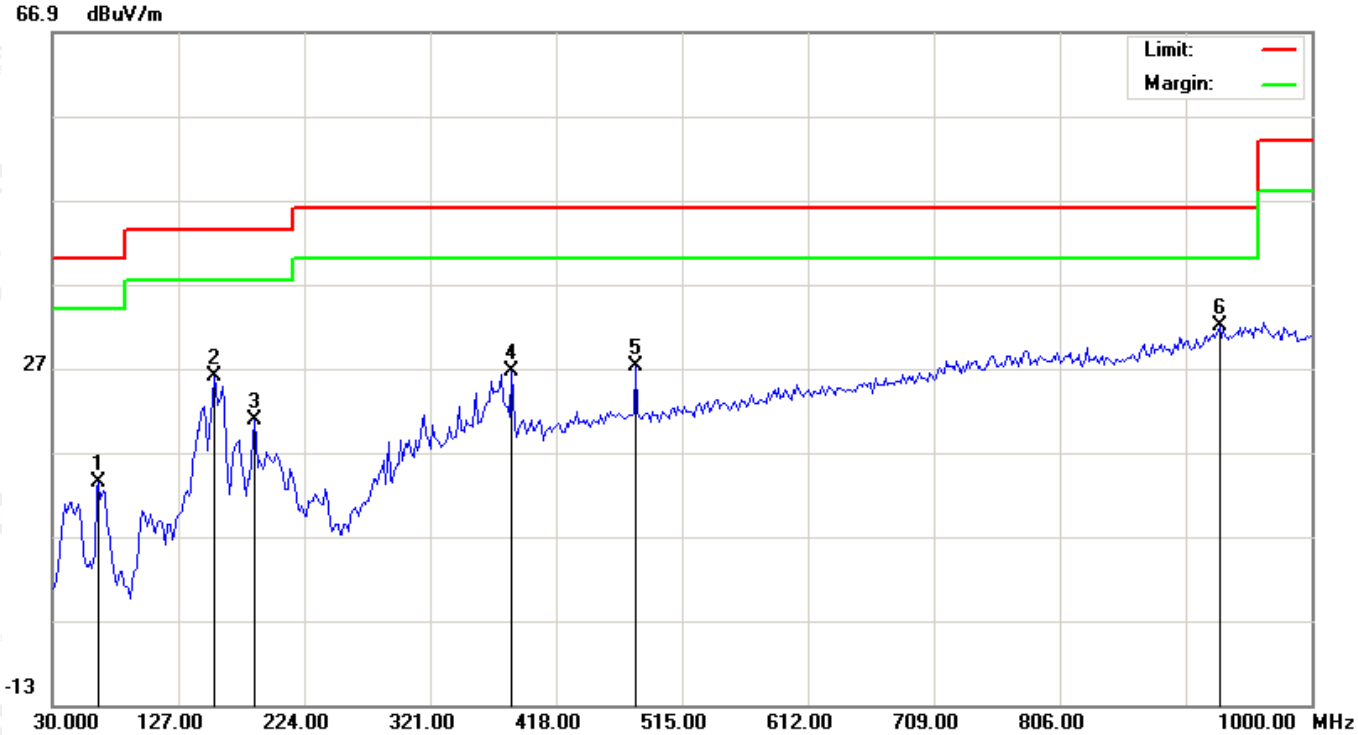

No.	Mk	Freq.	Reading	Factor	Measurement	Limit	Over	Detector	Antenna Height	Table Degree	Comment
	-	MHz	dBuV	dB/m	dBuV/m	dBuV/m	dB		cm	degree	
1		65.5667	7.39	5.93	13.32	40.00	-26.68	peak			
2		154.4832	14.31	11.67	25.98	43.50	-17.52	peak			
3		185.2000	9.46	11.31	20.77	43.50	-22.73	peak			
4		384.0500	7.72	18.96	26.68	46.00	-19.32	peak			
5		479.4333	6.24	20.91	27.15	46.00	-18.85	peak			
6	*	928.8667	2.61	29.41	32.02	46.00	-13.98	peak			

RESULT: PASS

The results shown in this test report refer only to the sample(s) tested unless otherwise stated and the sample(s) are retained for 30 days only. The document is issued by AGC, this document cannot be reproduced except in full with our prior written permission. The more details and the authenticity of the report will be confirmed at http://www.agc-cert.com.

RADIATED EMISSION TEST AT 3M DISTANCE-VERTICAL

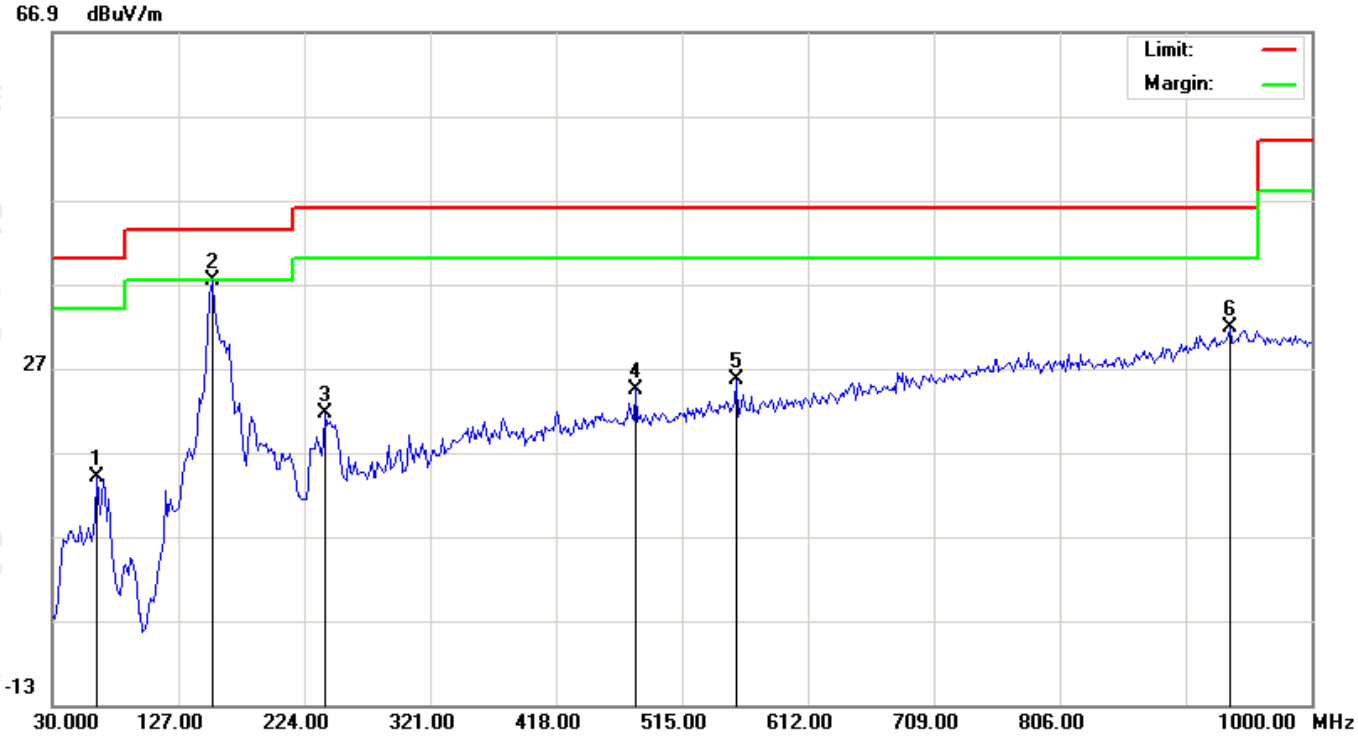

No.	Mk.	Freq.	Reading	Factor	Measurement	Limit	Over	Detector	Antenna Height	Table Degree	Comment
		MHz	dBuV	dB/m	dBuV/m	dBuV/m	dB		cm	degree	
1		63.9500	7.38	6.61	13.99	40.00	-26.01	peak			
2	*	152.8667	22.06	15.28	37.34	43.50	-6.16	peak			
3		240.1667	8.75	12.94	21.69	46.00	-24.31	peak			
4		479.4333	3.49	20.91	24.40	46.00	-21.60	peak			
5		557.0333	3.02	22.52	25.54	46.00	-20.46	peak			
6		936.9500	2.21	29.64	31.85	46.00	-14.15	peak			

RESULT: PASS

Note: 1.Measurement = Reading + Factor, Over = Measurement – Limit.

2. The “Factor” value can be calculated automatically by software of measurement system.

The results shown in this test report refer only to the sample(s) tested unless otherwise stated and the sample(s) are retained for 30 days only. The document is issued by AGC, this document cannot be reproduced except in full with our prior written permission. The more details and the authenticity of the report will be confirmed at http://www.agc-cert.com.

RADIATED EMISSION ABOVE 1GHZ (1-10TH HARMONICS) –HORIZONTAL

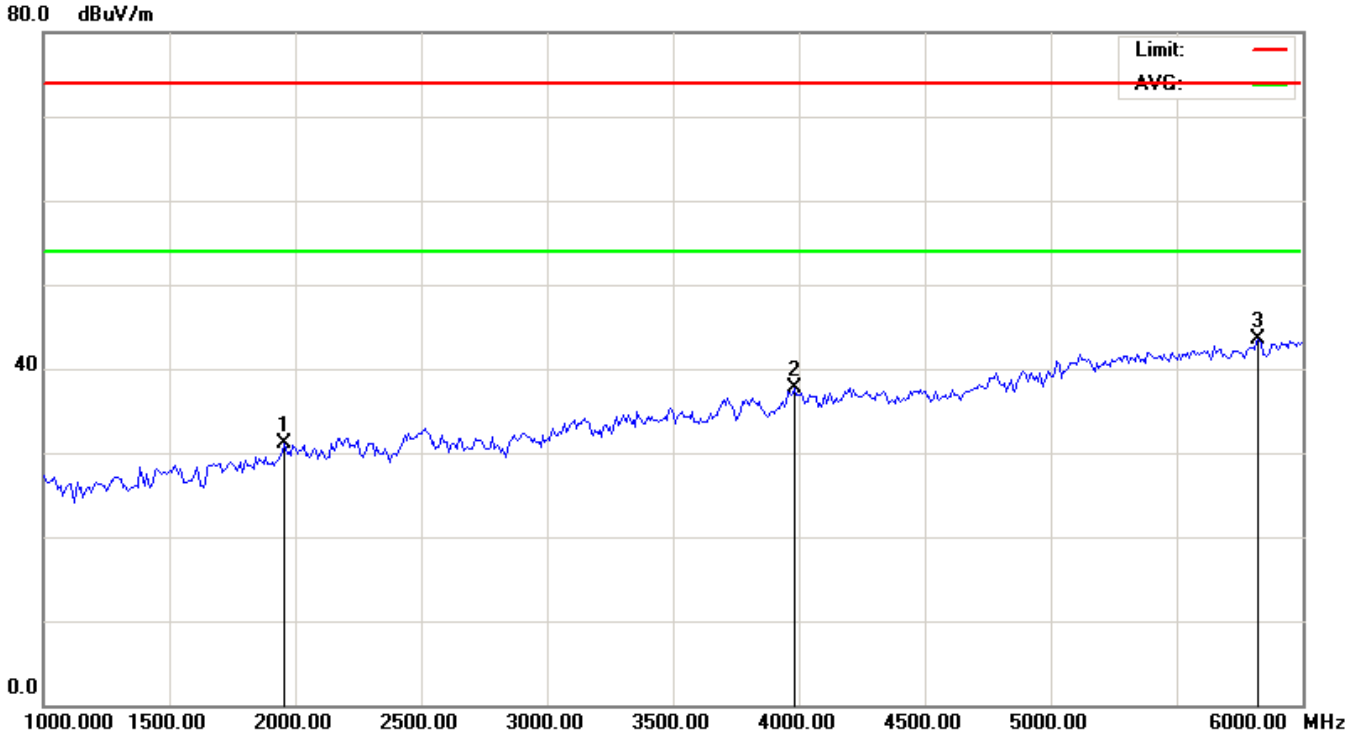

No.	Mk.	Freq.	Reading	Factor	Measurement	Limit	Over	Detector	Antenna Height	Table Degree	Comment
		MHz	dBuV	dB/m	dBuV/m	dBuV/m	dB		cm	degree	
1		1958.333	15.54	15.56	31.10	74.00	-42.90	peak			
2		3983.333	20.55	17.18	37.73	74.00	-36.27	peak			
3	*	5825.000	27.60	15.89	43.49	74.00	-30.51	peak			

The results shown in this test report refer only to the sample(s) tested unless otherwise stated and the sample(s) are retained for 30 days only. The document is issued by AGC, this document cannot be reproduced except in full with our prior written permission. The more details and the authenticity of the report will be confirmed at http://www.agc-cert.com.

RADIATED EMISSION ABOVE 1GHZ (1-10TH HARMONICS) –VERTICAL

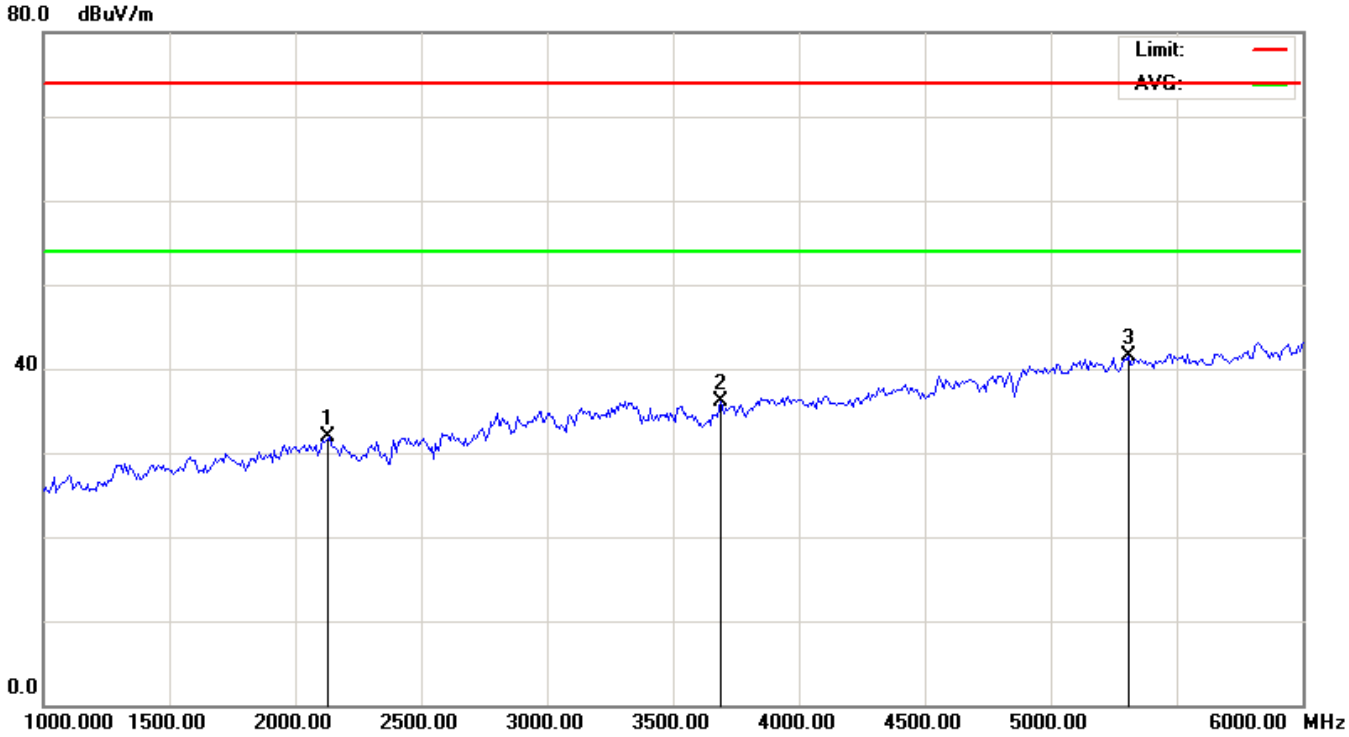

No.	Mk.	Freq.	Reading	Factor	Measurement	Limit	Over	Detector	Antenna Height	Table Degree	Comment
		MHz	dBuV	dB/m	dBuV/m	dBuV/m	dB		cm	degree	
1		2133.333	16.39	15.60	31.99	74.00	-42.01	peak			
2		3691.667	19.43	16.62	36.05	74.00	-37.95	peak			
3	*	5308.333	25.81	15.73	41.54	74.00	-32.46	peak			

Note: 1. Emissions range from 6GHz to 12.5GHz have 20dB margin. No recording in the test report.
2. Factor=Antenna Factor + Cable loss - Amplifier gain, Margin=Measurement-Limit.
3. The “Factor” value can be calculated automatically by software of measurement system.

The results shown in this test report refer only to the sample(s) tested unless otherwise stated and the sample(s) are retained for 30 days only. The document is issued by AGC, this document cannot be reproduced except in full with our prior written permission. The more details and the authenticity of the report will be confirmed at http://www.agc-cert.com.

APPENDIX A: PHOTOGRAPHS OF TEST SETUP

FCC LINE CONDUCTED EMISSION TEST SETUP

FCC RADIATED EMISSION TEST SETUP

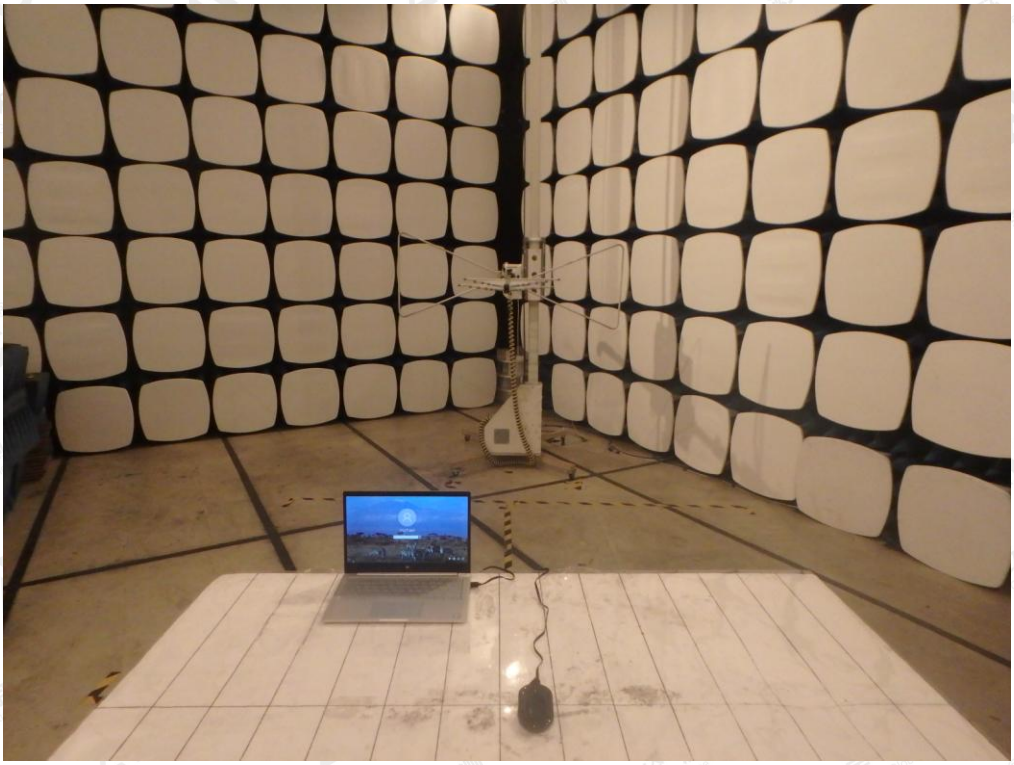

The results shown in this test report refer only to the sample(s) tested unless otherwise stated and the sample(s) are retained for 30 days only. The document is issued by AGC, this document cannot be reproduced except in full with our prior written permission. The more details and the authenticity of the report will be confirmed at http://www.agc-cert.com.

FCC RADIATED EMISSION TEST SETUP

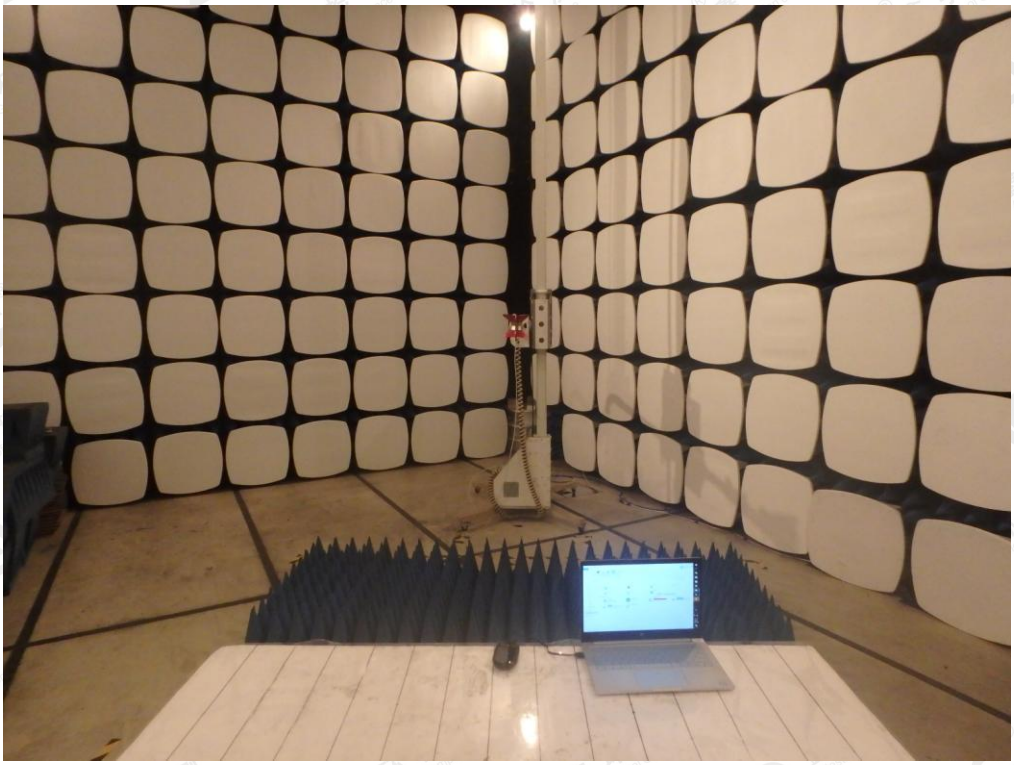

----END OF REPORT----

The results shown in this test report refer only to the sample(s) tested unless otherwise stated and the sample(s) are retained for 30 days only. The document is issued by AGC, this document cannot be reproduced except in full with our prior written permission. The more details and the authenticity of the report will be confirmed at http://www.agc-cert.com.