FCC Test Report

Report No.: AGC03576180501FE07

FCC ID	:	2APJY-TT201
APPLICATION PURPOSE	:	Original Equipment
PRODUCT DESIGNATION	:	Travis Touch
BRAND NAME	:	Travis
MODEL NAME	:	TT201
CLIENT	:	Travis GT b.v.
DATE OF ISSUE	:	July 03, 2018
STANDARD(S)	:	FCC Part 22 Rules FCC Part 24 Rules FCC Part 27 Rules
REPORT VERSION	:	V1.0

Attestation of ***G***lobal ***C***ompliance (Shenzhen) Co., Ltd.

CAUTION:
This report shall not be reproduced except in full without the written permission of the test laboratory and shall not be quoted out of context.

The results shown in this test report refer only to the sample(s) tested unless otherwise stated and the sample(s) are retained for 30 days only. The document is issued by AGC, this document cannot be reproduced except in full with our prior written permission. The more details and the authenticity of the report will be confirmed at http://www.agc-cert.com.

Attestation of Global Compliance
Tel: +86-755 2908 1955 Fax: +86-755 2600 8484 E-mail: agc@agc-cert.com 400 089 2118
Add: 2/F. , Building 2, No.1-4,Chaxi Sanwei Technical Industrial Park,Gushu, Xixiang, Baoan District, Shenzhen, Guangdong China

REPORT REVISE RECORD

Report Version	Revise Time	Issued Date	Valid Version	Notes
V1.0	/	July 03, 2018	Valid	Initial Release

The results shown in this test report refer only to the sample(s) tested unless otherwise stated and the sample(s) are retained for 30 days only. The document is issued by AGC, this document cannot be reproduced except in full with our prior written permission. The more details and the authenticity of the report will be confirmed at http://www.agc-cert.com.

TABLE OF CONTENTS

1.VERIFICATION OF COMPLIANCE 5
2. GENERAL INFORMATION 6
2.1 PRODUCT DESCRIPTION 6
2.2 RELATED SUBMITTAL(S) / GRANT (S) 8
2.3 TEST METHODOLOGY 8
2.4 TEST FACILITY 9
2.5 SPECIAL ACCESSORIES 10
2.6 EQUIPMENT MODIFICATIONS 10
3. SYSTEM TEST CONFIGURATION 11
3.1 EUT CONFIGURATION 11
3.2 EUT EXERCISE 11
3.3 GENERAL TECHNICAL REQUIREMENTS 11
3.4 CONFIGURATION OF EUT SYSTEM 12
4. SUMMARY OF TEST RESULTS 13
5. DESCRIPTION OF TEST MODES 14
6. OUTPUT POWER 17
6.1 CONDUCTED OUTPUT POWER 17
6.1.1 MEASUREMENT METHOD 17
6.2 RADIATED OUTPUT POWER 37
6.2.1 MEASUREMENT METHOD 37
6.3. PEAK-TO-AVERAGE RATIO 49
6.3.1 MEASUREMENT METHOD 49
7. SPURIOUS EMISSION 73
7.1 CONDUCTED SPURIOUS EMISSION 73
7.2 RADIATED SPURIOUS EMISSION 75
8. FREQUENCY STABILITY 83
8.1 MEASUREMENT METHOD 83
8.2 PROVISIONS APPLICABLE 84
8.3 MEASUREMENT RESULT (WORST) 85
9. OCCUPIED BANDWIDTH 88
9.1 MEASUREMENT METHOD 88
9.2 PROVISIONS APPLICABLE 88
9.3 MEASUREMENT RESULT 88
10. EMISSION BANDWIDTH 98

The results shown in this test report refer only to the sample(s) tested unless otherwise stated and the sample(s) are retained for 30 days only. The document is issued by AGC, this document cannot be reproduced except in full with our prior written permission. The more details and the authenticity of the report will be confirmed at http://www.agc-cert.com.

10.1 MEASUREMENT METHOD 98
10.2 PROVISIONS APPLICABLE 98
10.3 MEASUREMENT RESULT 98
11. BAND EDGE 102
11.1 MEASUREMENT METHOD 108
11.2 PROVISIONS APPLICABLE 108
11.3 MEASUREMENT RESULT 108
APPENDIX A TEST PLOTS FOR CONDUCTED SPURIOUS EMISSION 109
APPENDIX B TEST PLOTS FOR OCCUPIED BANDWIDTH (99%) 115
EMISSION BANDWIDTH (-26dBC) 124
APPENDIX CTEST PLOTS FOR BAND EDGES 135
APPENDIX D PHOTOGRAPHS OF TEST SETUP 149

The results shown in this test report refer only to the sample(s) tested unless otherwise stated and the sample(s) are retained for 30 days only. The document is issued by AGC, this document cannot be reproduced except in full with our prior written permission. The more details and the authenticity of the report will be confirmed at http://www.agc-cert.com.

1.VERIFICATION OF COMPLIANCE

Applicant	Travis GT b.v.
Address	Stationsplein 45, 3013 AK Rotterdam, The Netherlands, Rotterdam, Netherlands
Manufacturer	Huano International Technology Limited
Address	29th Floor, Yinglong Building, # 6025 ShenNan Road, FuTian District, Shenzhen, China
Product Designation	Travis Touch
Brand Name	Travis
Test Model	TT201
Date of test	June 13, 2018~July 03, 2018
Deviation	None
Condition of Test Sample	Normal

We hereby certify that:

The above equipment was tested by Attestation of Global Compliance(Shenzhen) Co., Ltd. The data evaluation, test procedures, and equipment configurations shown in this report were made in accordance with the procedures given in ANSI/TIA-603-E-2016. The sample tested as described in this report is in compliance with the FCC Rules Part22, 24 and 27.

The test results of this report relate only to the tested sample identified in this report.

Tested By Nice.xie

Nice Xie(Xie xiaosong) July 03, 2018

Reviewed By Bart xie

Bart Xie(Xie Xiaobin) July 03, 2018

Approved By Forrest Lei

Forrest Lei(Lei Yonggang)
Authorized Officer July 03, 2018

The results shown in this test report refer only to the sample(s) tested unless otherwise stated and the sample(s) are retained for 30 days only. The document is issued by AGC, this document cannot be reproduced except in full with our prior written permission. The more details and the authenticity of the report will be confirmed at http://www.agc-cert.com.

2. GENERAL INFORMATION

2.1 PRODUCT DESCRIPTION

A major technical description of EUT is described as following:

Radio System Type:	LTE	
Hardware version:	F01_MB_V1.11	
Software version:	V2.0.0	
Frequency Bands:	☒FDD Band 7 ☒FDD Band 17 ☒TDD Band 38 ☒TDD Band 40 ☒TDD Band 41 (U.S. Bands) ☒FDD Band 1 ☒FDD Band 3 ☒FDD Band 7 ☐FDD Band 8 ☒FDD Band 20 ☒TDD Band 28 ☐TDD Band 34 ☒TDD Band 38 ☒TDD Band 40 ☐TDD Band 41 ☐FDD Band 43 (Non-U.S. Bands)	
Frequency Range	LTE Band 7	Transmission (TX): 2500 to 2569.9MHz
		Receiving (RX): 2620 to 2689.9 MHz
	LTE Band 17	Transmission (TX): 704 to 715.9 MHz
		Receiving (RX): 734 to 745.9 MHz
	LTE Band 38	Transmission (TX): 2570 to 2619.9 MHz
		Receiving (RX): 2570 to 2619.9 MHz
	LTE Band 40	Transmission (TX): 2300 to 2399.9 MHz
		Receiving (RX): 2300 to 2399.9 MHz
	LTE Band 41	Transmission (TX): 2496 to 2689.9 MHz
		Receiving (RX): 2496 to 2689.9 MHz
Supported Channel Bandwidth	LTE Band 7	☒ 5 MHz ☒ 10 MHz ☒ 15 MHz ☒ 20 MHz
	LTE Band 17	☒ 5 MHz ☒ 10 MHz
	LTE Band 38	☒ 5 MHz ☒ 10 MHz ☒ 15 MHz ☒ 20 MHz
	LTE Band 40	☒ 5 MHz ☒ 10 MHz ☒ 15 MHz ☒ 20 MHz
	LTE Band 41	☒ 5 MHz ☒ 10 MHz ☒ 15 MHz ☒ 20 MHz
Antenna:	PIFA Antenna	
Type of Modulation	QPSK/16QAM	
Antenna gain	Band 7:0.45dBi; Band 17:0.63dBi; Band 38:0.66dBi; Band 40:0.37dBi; Band 41:0.39dBi	
Diversity Antenna gain	Band 7:0.42dBi; Band 17:0.55dBi; Band 38:0.60dBi; Band 40:0.23dBi; Band 41:0.23dBi	
Power Supply:	DC 3.8V by battery	
Single Card:	GSM/WCDMA/LTE Card Slot	
Power Class	3	

The results shown in this test report refer only to the sample(s) tested unless otherwise stated and the sample(s) are retained for 30 days only. The document is issued by AGC, this document cannot be reproduced except in full with our prior written permission. The more details and the authenticity of the report will be confirmed at http://www.agc-cert.com.

Extreme Vol. Limits:	DC3.4V to 4.35 V (Normal: 3.8 V)
Temperature range	-10℃ to +50℃
Note1: The High Voltage DC4.35V and Low Voltage DC3.4V were declared by manufacturer, The EUT couldn't be operating normally with higher or lower voltage..	

The results shown in this test report refer only to the sample(s) tested unless otherwise stated and the sample(s) are retained for 30 days only. The document is issued by AGC, this document cannot be reproduced except in full with our prior written permission. The more details and the authenticity of the report will be confirmed at http://www.agc-cert.com.

2.2 RELATED SUBMITTAL(S) / GRANT (S)

This submittal(s) (test report) is intended for **FCC ID: 2APJY-TT201**, filing to comply with the FCC Part 22, Part 24 and Pant 27 requirements

.

2.3 TEST METHODOLOGY

The radiated emission testing was performed according to the procedures of ANSI/TIA-603-E-2016, and FCC KDB 971168 D01 Power Means License Digital Systems V03R01.

The results shown in this test report refer only to the sample(s) tested unless otherwise stated and the sample(s) are retained for 30 days only. The document is issued by AGC, this document cannot be reproduced except in full with our prior written permission. The more details and the authenticity of the report will be confirmed at http://www.agc-cert.com.

2.4 TEST FACILITY

Site	Attestation of Global Compliance (Shenzhen) Co., Ltd
Location	1-2F., Bldg.2, No.1-4, ChaxiSanwei Technical Industrial Park, Gushu, Xixiang, Bao'an District B112-B113, Bldg.12, BaoanBldg Materials Center, No.1 of Xixiang Inner Ring Road, Baoan District, Shenzhen 518012
NVLAP LAB CODE	600153-0
Designation Number	CN5028
Description	Attestation of Global Compliance(Shenzhen) Co., Ltd is accredited by National Voluntary Laboratory Accreditation program, NVLAP Code 600153-0

ALL TEST EQUIPMENT LIST

Equipment	Manufacturer	Model	S/N	Cal. Date	Cal. Due
TEST RECEIVER	R&S	ESPI	101206	Jun.12, 2018	Jun.11, 2019
LISN	R&S	ESH2-Z5	100086	Aug.21, 2017	Aug.20, 2018
TEST RECEIVER	R&S	ESCI	10096	Jun.12, 2018	Jun.11, 2019
EXA Signal Analyzer	Aglient	N9010A	MY53470504	Dec.08, 2017	Dec.07, 2018
Horn antenna	SCHWARZBECK	BBHA 9170	#768	Sep.20, 2017	Sep.19, 2018
preamplifier	ChengYi	EMC184045SE	980508	Sep.15, 2017	Sep.14, 2018
Double-Ridged Waveguide Horn	ETS LINDGREN	3117	00034609	May.18, 2017	May.17, 2019
Broadband Preamplifier	SCHWARZBECK	BBV 9718	9718-205	Jun.12, 2018	Jun.11, 2019
ANTENNA	SCHWARZBECK	VULB9168	D69250	Sep.28, 2017	Sep.27, 2018
SIGNAL ANALYZER	Agilent	N9020A	MY52090123	Sep. 21, 2017	Sep. 20, 2018
USB Wideband Power Sensor	Agilent	U2021XA	MY54110007	Sep. 21, 2017	Sep. 20, 2018
Universal Radio Communication Tester	R&S	CMU200	120237	Mar.01,2018	Feb.28,2019
Universal Radio Communication Tester	Agilent	8960	GB46200384	July 16,2017	July 15,2018
Wireless communication test	R&S	CMW500	120909	July 13, 2017	July 12, 2018
Power Splitter	Agilent	11636A	34	Sep.21,2017	Sep.20,2018
Attenuator	JFW	50FHC-006-50	N/A	Jun.12, 2018	Jun.11, 2019

The results shown in this test report refer only to the sample(s) tested unless otherwise stated and the sample(s) are retained for 30 days only. The document is issued by AGC, this document cannot be reproduced except in full with our prior written permission. The more details and the authenticity of the report will be confirmed at http://www.agc-cert.com.

2.5 SPECIAL ACCESSORIES

The battery was supplied by the applicant were used as accessories and being tested with EUT intended for FCC grant together.

2.6 EQUIPMENT MODIFICATIONS

Not available for this EUT intended for grant.

The results shown in this test report refer only to the sample(s) tested unless otherwise stated and the sample(s) are retained for 30 days only. The document is issued by AGC, this document cannot be reproduced except in full with our prior written permission. The more details and the authenticity of the report will be confirmed at http://www.agc-cert.com.

3. SYSTEM TEST CONFIGURATION

3.1 EUT CONFIGURATION

The EUT configuration for testing is installed on RF field strength measurement to meet the Commission's requirement and operating in a manner which intends to maximize its emission characteristics in a continuous normal application.

3.2 EUT EXERCISE

The Transmitter was operated in the maximum output power mode through Communication Tester. The TX frequency was fixed which was for the purpose of the measurements.

3.3 GENERAL TECHNICAL REQUIREMENTS

Item Number	Item Description		FCC Rules
1	Output Power	Conducted output power	2.1046/22.913(a)(2)/24.232(c)/ 27.50(d)(4)/ 27.50(h)(2)
		Radiated output power	
2	Peak-to-Average Ratio	Peak-to-Average Ratio	24.232(d)
3	Spurious Emission	Conducted spurious emission	2.1051/22.917(a)/24.238(a) 27.53(h)/ 27.53(g)
		Radiated spurious emission	
4	Frequency Stability		2.1055/22.355/24.235/27.54
5	Occupied Bandwidth		2.1049 (h)(i)
6	Band Edge		2.1051/22.917(a)/24.238(a) 27.53(h)/ 27.53(g)

Note: Testing was performed by configuring EUT to maximum output power status, the declared output power class for different.

The results shown in this test report refer only to the sample(s) tested unless otherwise stated and the sample(s) are retained for 30 days only. The document is issued by AGC, this document cannot be reproduced except in full with our prior written permission. The more details and the authenticity of the report will be confirmed at http://www.agc-cert.com.

3.4 CONFIGURATION OF EUT SYSTEM

Fig. 2-1 Configuration of EUT System

Table 2-1 Equipment Used in EUT System

1	Travis Touch	TT201	FFDD	EUT
2	Battery	FHP K664060P	DC3.8V/ 2500mAh	Accessory
3	USB	N/A	N/A	Accessory

***Note: All the accessories have been used during the test. The following “EUT” in setup diagram means EUT system.

The results shown in this test report refer only to the sample(s) tested unless otherwise stated and the sample(s) are retained for 30 days only. The document is issued by AGC, this document cannot be reproduced except in full with our prior written permission. The more details and the authenticity of the report will be confirmed at http://www.agc-cert.com.

4. SUMMARY OF TEST RESULTS

Item Number	Item Description		FCC Rules	Result
1	Output Power	Conducted Output Power	2.1046/22.913(a)(2)/24.232(c)/ 27.50(d)(4)/ 27.50(h)(2)	Pass
		Radiated Output Power		
2	Peak-to-Average Ratio	Peak-to-Average Ratio	24.232(d)	Pass
3	Spurious Emission	Conducted Spurious Emission	2.1051/22.917(a)/24.238(a) 27.53(h)/ 27.53(g)	Pass
		Radiated Spurious Emission		
4	Frequency Stability		2.1055/22.355/24.235/27.54	Pass
5	Occupied Bandwidth		2.1049 (h)(i)	Pass
6	Band Edge		2.1051/22.917(a)/24.238(a) 27.53(h)/ 27.53(g)	Pass

The results shown in this test report refer only to the sample(s) tested unless otherwise stated and the sample(s) are retained for 30 days only. The document is issued by AGC, this document cannot be reproduced except in full with our prior written permission. The more details and the authenticity of the report will be confirmed at http://www.agc-cert.com.

5. DESCRIPTION OF TEST MODES

During the testing, the EUT was controlled via Rhode & Schwarz Digital Radio Communication Tester (CMW 500) to ensure max power transmission and proper modulation. Three channels (The top channel, the middle channel and the bottom channel) were chosen for testing on both LTE frequency band.
The worst condition was recorded in the test report if no other modes test data.

Test Mode	Test Modes Description
LTE	LTE system, QPSK modulation
LTE	LTE system, 16QAM modulation

Test Mode	TX / RX	RF Channel		
		Low (B)	Middle (M)	High (T)
LTE Band 7	TX (5M)	Channel 20775	Channel 21100	Channel 21425
		2502.5 MHz	2535.0 MHz	2567.5 MHz
	TX (10M)	Channel 20800	Channel 21100	Channel 21400
		2505.0 MHz	2535.0MHz	2565.0 MHz
	TX (15M)	Channel 20825	Channel 21100	Channel 21375
		2507.5 MHz	2535.5 MHz	2562.5 MHz
	TX (20M)	Channel 20850	Channel 21100	Channel 21350
		2510.0MHz	2535.0 MHz	2569.9 MHz
	RX (5M)	Channel 2775	Channel 3100	Channel 3425
		2622.5 MHz	2655.0 MHz	2687.5 MHz
	RX (10M)	Channel 2800	Channel 3100	Channel 3400
		2625.0 MHz	2655.0 MHz	2685.0 MHz
	RX (15M)	Channel 2825	Channel 3100	Channel 3375
		2627.5 MHz	2655.0 MHz	2682.5 MHz
	RX (20M)	Channel 2850	Channel 3100	Channel 3350
		2630.0 MHz	2655.0 MHz	2680.0 MHz

The results shown in this test report refer only to the sample(s) tested unless otherwise stated and the sample(s) are retained for 30 days only. The document is issued by AGC, this document cannot be reproduced except in full with our prior written permission. The more details and the authenticity of the report will be confirmed at http://www.agc-cert.com.

Test Mode	TX / RX	RF Channel		
		Low (B)	Middle (M)	High (T)
LTE Band 17	TX (5M)	Channel 23755	Channel 23790	Channel 23825
		706.5 MHz	710.0 MHz	713.5 MHz
	TX (10M)	Channel 23780	Channel 23790	Channel 23800
		709.0 MHz	710.0 MHz	711.0 MHz
	RX (5M)	Channel 5755	Channel 5790	Channel 5825
		736.5 MHz	740.0 MHz	743.5 MHz
	RX (10M)	Channel 5780	Channel 5790	Channel 5800
		739.0 MHz	740.0 MHz	741.0 MHz

Test Mode	TX / RX	RF Channel		
		Low (B)	Middle (M)	High (T)
LTE Band 38	TX (5M)	Channel 37775	Channel 38000	Channel 38225
		2572.5 MHz	2595.0 MHz	2617.5 MHz
	TX (10M)	Channel 37800	Channel 38000	Channel 38200
		2575.0 MHz	2595.0 MHz	2615.0 MHz
	TX (15M)	Channel 37825	Channel 38000	Channel 38175
		2577.5 MHz	2595.0 MHz	2612.5 MHz
	TX (20M)	Channel 37850	Channel 38000	Channel 38150
		2580.0 MHz	2595.0 MHz	2610.0 MHz
	RX (5M)	Channel 37775	Channel 38000	Channel 38225
		2572.5 MHz	2595.0 MHz	2617.5 MHz
	RX (10M)	Channel 37800	Channel 38000	Channel 38200
		2575.0 MHz	2595.0 MHz	2615.0 MHz
	RX (15M)	Channel 37825	Channel 38000	Channel 38175
		2577.5 MHz	2595.0 MHz	2612.5 MHz
	RX (20M)	Channel 37850	Channel 38000	Channel 38150
		2580.0 MHz	2595.0 MHz	2610.0 MHz

The results shown in this test report refer only to the sample(s) tested unless otherwise stated and the sample(s) are retained for 30 days only. The document is issued by AGC, this document cannot be reproduced except in full with our prior written permission. The more details and the authenticity of the report will be confirmed at http://www.agc-cert.com.

Test Mode	TX / RX	RF Channel		
		Low (B)	Middle (M)	High (T)
LTE Band 40	TX (5M)	Channel 38675	Channel 39150	Channel 39625
		2302.5 MHz	2350.0 MHz	2397.5 MHz
	TX (10M)	Channel 38700	Channel 39150	Channel 39600
		2305.0 MHz	2350.0 MHz	2395.0 MHz
	TX (15M)	Channel 38725	Channel 39150	Channel 39575
		2307.0 MHz	2350.0 MHz	2392.5 MHz
	TX (20M)	Channel 38750	Channel 39150	Channel 39550
		2310.0 MHz	2350.0 MHz	2390.0 MHz
	RX (5M)	Channel 38675	Channel 39150	Channel 39625
		2302.5 MHz	2350.0 MHz	2397.5 MHz
	RX (10M)	Channel 38700	Channel 39150	Channel 39600
		2305.0 MHz	2350.0 MHz	2395.0 MHz
	RX (15M)	Channel 38725	Channel 39150	Channel 39575
		2307.0 MHz	2350.0 MHz	2392.5 MHz
	RX (20M)	Channel 38750	Channel 39150	Channel 39550
		2310.0 MHz	2350.0 MHz	2390.0 MHz

Test Mode	TX / RX	RF Channel		
		Low (B)	Middle (M)	High (T)
LTE Band 41	TX (5M)	Channel 39675	Channel 40620	Channel 41565
		2498.5 MHz	2593.0 MHz	2687.5 MHz
	TX (10M)	Channel 39700	Channel 40620	Channel 41540
		2501.0 MHz	2593.0 MHz	2685.0 MHz
	TX (15M)	Channel 39725	Channel 40620	Channel 41515
		2503.5 MHz	2593.0 MHz	2682.5 MHz
	TX (20M)	Channel 39750	Channel 40620	Channel 41490
		2506.0 MHz	2593.0 MHz	2680.0 MHz
	RX (5M)	Channel 39675	Channel 40620	Channel 41565
		2498.5 MHz	2593.0 MHz	2687.5 MHz
	RX (10M)	Channel 39700	Channel 40620	Channel 41540
		2501.0 MHz	2593.0 MHz	2685.0 MHz
	RX (15M)	Channel 39725	Channel 40620	Channel 41515
		2503.5 MHz	2593.0 MHz	2682.5 MHz
	RX (20M)	Channel 39750	Channel 40620	Channel 41490
		2506.0 MHz	2593.0 MHz	2680.0 MHz

The results shown in this test report refer only to the sample(s) tested unless otherwise stated and the sample(s) are retained for 30 days only. The document is issued by AGC, this document cannot be reproduced except in full with our prior written permission. The more details and the authenticity of the report will be confirmed at http://www.agc-cert.com.

6. OUTPUT POWER

6.1 CONDUCTED OUTPUT POWER

6.1.1 MEASUREMENT METHOD

The EUT is coupled to the SS with attenuator through power splitter; the RF load attached to EUT antenna terminal is 50ohm, the path loss as the factor is calibrated to correct the reading. A system simulator was used to establish communication with the EUT , Its parameters were set to force the EUT transmitting at maximum output power. The measured power in the radio frequency on the transmitter output terminals shall be reported. The measurements were performed on all modes at 3 typical channels (the Top Channel, the Middle Channel and the Bottom Channel) for each band.

6.1.2 MEASUREMENT RESULT

Conducted Output Power Limits		
Mode	**Average Power**	**Tolerance(dB)**
LTE	23 dBm (0.2W)	± 2.7

The results shown in this test report refer only to the sample(s) tested unless otherwise stated and the sample(s) are retained for 30 days only. The document is issued by AGC, this document cannot be reproduced except in full with our prior written permission. The more details and the authenticity of the report will be confirmed at http://www.agc-cert.com.

LTE Band 7

BW (MHz)	Ch	Freq. (MHz)	Mode	UL RB Allocation	UL RB Offset	MPR	Average power (dBm)
20MHz	20850	2510	QPSK	1	0	0	21.49
				1	49	0	21.52
				1	99	0	21.57
				50	0	1	20.22
				50	25	1	20.64
				50	49	1	20.73
				100	0	1	20.61
			16QAM	1	0	1	20.61
				1	49	1	20.55
				1	99	1	20.70
				50	0	2	19.88
				50	25	2	19.46
				50	49	2	19.74
				100	0	2	19.60
	20110	2535	QPSK	1	0	0	21.39
				1	49	0	21.54
				1	99	0	21.38
				50	0	1	20.46
				50	25	1	20.38
				50	49	1	20.51
				100	0	1	20.51
			16QAM	1	0	1	20.56
				1	49	1	20.53
				1	99	1	20.54
				50	0	2	19.77
				50	25	2	19.43
				50	49	2	19.52
				100	0	2	19.52
	21350	2560	QPSK	1	0	0	21.32
				1	49	0	21.57
				1	99	0	21.28
				50	0	1	20.20
				50	25	1	20.28
				50	49	1	20.29
				100	0	1	20.35
			16QAM	1	0	1	20.65
				1	49	1	20.47
				1	99	1	20.56
				50	0	2	19.52
				50	25	2	19.43
				50	49	2	19.39
				100	0	2	19.37

The results shown in this test report refer only to the sample(s) tested unless otherwise stated and the sample(s) are retained for 30 days only. The document is issued by AGC, this document cannot be reproduced except in full with our prior written permission. The more details and the authenticity of the report will be confirmed at http://www.agc-cert.com.

BW (MHz)	Ch	Freq. (MHz)	Mode	UL RB Allocation	UL RB Offset	MPR	Average power (dBm)
15MHz	20825	2507.5	QPSK	1	0	0	22.08
				1	37	0	21.86
				1	74	0	21.97
				36	0	1	21.26
				36	16	1	21.22
				36	35	1	21.20
				75	0	1	21.17
			16QAM	1	0	1	21.27
				1	37	1	21.35
				1	74	1	21.22
				36	0	2	20.09
				36	16	2	20.15
				36	35	2	20.14
				75	0	2	20.09
	21100	2535	QPSK	1	0	0	21.92
				1	37	0	21.87
				1	74	0	21.83
				36	0	1	20.56
				36	16	1	20.82
				36	35	1	20.78
				75	0	1	20.87
			16QAM	1	0	1	20.88
				1	37	1	20.46
				1	74	1	20.67
				36	0	2	19.56
				36	16	2	19.45
				36	35	2	19.67
				75	0	2	19.70
	21375	2562.5	QPSK	1	0	0	21.39
				1	37	0	21.57
				1	74	0	21.43
				36	0	1	20.52
				36	16	1	20.43
				36	35	1	20.46
				75	0	1	20.48
			16QAM	1	0	1	20.54
				1	37	1	20.44
				1	74	1	20.64
				36	0	2	19.53
				36	16	2	19.54
				36	35	2	19.48
				75	0	2	19.44

The results shown in this test report refer only to the sample(s) tested unless otherwise stated and the sample(s) are retained for 30 days only. The document is issued by AGC, this document cannot be reproduced except in full with our prior written permission. The more details and the authenticity of the report will be confirmed at http://www.agc-cert.com.

BW (MHz)	Ch	Freq. (MHz)	Mode	UL RB Allocation	UL RB Offset	MPR	Average power (dBm)
10MHz	20800	2505	QPSK	1	0	0	22.15
				1	24	0	22.21
				1	49	0	22.01
				25	0	1	21.16
				25	12	1	21.09
				25	25	1	21.10
				50	0	1	21.09
			16QAM	1	0	1	21.32
				1	24	1	21.54
				1	49	1	21.19
				25	0	2	20.03
				25	12	2	20.10
				25	25	2	20.07
				50	0	2	20.04
	21100	2535	QPSK	1	0	0	21.95
				1	24	0	20.88
				1	49	0	21.91
				25	0	1	20.87
				25	12	1	20.79
				25	25	1	20.97
				50	0	1	20.95
			16QAM	1	0	1	21.19
				1	24	1	21.25
				1	49	1	21.12
				25	0	2	19.57
				25	12	2	19.89
				25	25	2	19.94
				50	0	2	19.90
	21400	2565	QPSK	1	0	0	21.85
				1	24	0	22.00
				1	49	0	22.02
				25	0	1	20.58
				25	12	1	20.79
				25	25	1	20.93
				50	0	1	20.92
			16QAM	1	0	1	21.11
				1	24	1	20.22
				1	49	1	21.30
				25	0	2	20.02
				25	12	2	19.99
				25	25	2	19.92
				50	0	2	19.96

The results shown in this test report refer only to the sample(s) tested unless otherwise stated and the sample(s) are retained for 30 days only. The document is issued by AGC, this document cannot be reproduced except in full with our prior written permission. The more details and the authenticity of the report will be confirmed at http://www.agc-cert.com.

BW (MHz)	Ch	Freq. (MHz)	Mode	UL RB Allocation	UL RB Offset	MPR	Average power (dBm)
5MHz	20775	2502.5	QPSK	1	0	0	22.07
				1	12	0	21.89
				1	24	0	21.96
				12	0	1	21.11
				12	6	1	21.09
				12	11	1	21.03
				25	0	1	21.09
			16QAM	1	0	1	21.31
				1	12	1	21.34
				1	24	1	21.26
				12	0	2	20.12
				12	6	2	20.09
				12	11	2	20.15
				25	0	2	20.12
	21100	2535	QPSK	1	0	0	21.96
				1	12	0	21.94
				1	24	0	21.91
				12	0	1	20.86
				12	6	1	20.89
				12	11	1	20.92
				25	0	1	20.95
			16QAM	1	0	1	20.92
				1	12	1	20.96
				1	24	1	20.94
				12	0	2	19.95
				12	6	2	19.87
				12	11	2	19.94
				25	0	2	19.93
	21425	2567.5	QPSK	1	0	0	21.75
				1	12	0	21.74
				1	24	0	21.96
				12	0	1	20.88
				12	6	1	20.79
				12	11	1	20.92
				25	0	1	20.93
			16QAM	1	0	1	20.86
				1	12	1	20.94
				1	24	1	21.01
				12	0	2	19.88
				12	6	2	19.78
				12	11	2	19.98
				25	0	2	19.97

The results shown in this test report refer only to the sample(s) tested unless otherwise stated and the sample(s) are retained for 30 days only. The document is issued by AGC, this document cannot be reproduced except in full with our prior written permission. The more details and the authenticity of the report will be confirmed at http://www.agc-cert.com.

LTE Band 17

BW (MHz)	Ch	Freq. (MHz)	Mode	UL RB Allocation	UL RB Offset	MPR	Average power (dBm)
10MHz	23780	709.0	QPSK	1	0	0	22.45
				1	24	0	22.36
				1	49	0	22.44
				25	0	1	21.20
				25	12	1	21.19
				25	25	1	21.33
				50	0	1	21.10
			16QAM	1	0	1	21.43
				1	24	1	21.33
				1	49	1	20.56
				25	0	2	20.46
				25	12	2	20.74
				25	25	2	20.66
				50	0	2	20.34
	23790	710.0	QPSK	1	0	0	21.11
				1	24	0	21.37
				1	49	0	21.09
				25	0	1	22.16
				25	12	1	22.22
				25	25	1	22.03
				50	0	1	22.36
			16QAM	1	0	1	21.12
				1	24	1	21.09
				1	49	1	21.34
				25	0	2	21.00
				25	12	2	21.34
				25	25	2	21.15
				50	0	2	21.19
	23800	711.0	QPSK	1	0	0	23.03
				1	24	0	23.10
				1	49	0	23.11
				25	0	1	22.55
				25	12	1	22.47
				25	25	1	22.58
				50	0	1	22.56
			16QAM	1	0	1	22.09
				1	24	1	22.16
				1	49	1	22.31
				25	0	2	22.35
				25	12	2	20.13
				25	25	2	20.15
				50	0	2	20.19

The results shown in this test report refer only to the sample(s) tested unless otherwise stated and the sample(s) are retained for 30 days only. The document is issued by AGC, this document cannot be reproduced except in full with our prior written permission. The more details and the authenticity of the report will be confirmed at http://www.agc-cert.com.

BW (MHz)	Ch	Freq. (MHz)	Mode	UL RB Allocation	UL RB Offset	MPR	Average power (dBm)
5MHz	23755	706.5	QPSK	1	0	0	22.52
				1	12	0	22.43
				1	24	0	22.53
				12	0	1	21.53
				12	6	1	21.43
				12	11	1	21.78
				25	0	1	22.06
			16QAM	1	0	1	22.61
				1	12	1	22.56
				1	24	1	22.34
				12	0	2	21.02
				12	6	2	21.33
				12	11	2	21.09
				25	0	2	22.26
	23790	710.0	QPSK	1	0	0	22.71
				1	12	0	22.56
				1	24	0	22.24
				12	0	1	22.15
				12	6	1	22.19
				12	11	1	21.31
				25	0	1	21.56
			16QAM	1	0	1	21.72
				1	12	1	21.56
				1	24	1	21.18
				12	0	2	21.55
				12	6	2	21.36
				12	11	2	21.25
				25	0	2	20.64
	23825	713.5	QPSK	1	0	0	22.21
				1	12	0	22.36
				1	24	0	22.13
				12	0	1	22.25
				12	6	1	22.33
				12	11	1	21.17
				25	0	1	21.22
			16QAM	1	0	1	21.32
				1	12	1	21.25
				1	24	1	21.31
				12	0	2	20.36
				12	6	2	20.43
				12	11	2	20.29
				25	0	2	20.47

The results shown in this test report refer only to the sample(s) tested unless otherwise stated and the sample(s) are retained for 30 days only. The document is issued by AGC, this document cannot be reproduced except in full with our prior written permission. The more details and the authenticity of the report will be confirmed at http://www.agc-cert.com.

LTE Band 38

BW (MHz)	Ch	Freq. (MHz)	Mode	UL RB Allocation	UL RB Offset	MPR	Average power (dBm)
20MHz	37850	2580.0	QPSK	1	0	0	23.55
				1	49	0	23.49
				1	99	0	23.66
				50	0	1	21.52
				50	25	1	21.37
				50	49	1	21.46
				100	0	1	21.29
			16QAM	1	0	1	22.91
				1	49	1	22.56
				1	99	1	22.89
				50	0	2	21.33
				50	25	2	21.43
				50	49	2	21.29
				100	0	2	21.28
	38000	2595.0	QPSK	1	0	0	23.42
				1	49	0	23.52
				1	99	0	23.69
				50	0	1	21.42
				50	25	1	21.53
				50	49	1	21.30
				100	0	1	21.28
			16QAM	1	0	1	22.90
				1	49	1	22.87
				1	99	1	22.89
				50	0	2	21.31
				50	25	2	23.42
				50	49	2	21.30
				100	0	2	21.27
	38150	2609.1	QPSK	1	0	0	23.36
				1	49	0	23.53
				1	99	0	23.69
				50	0	1	21.12
				50	25	1	21.28
				50	49	1	21.30
				100	0	1	21.26
			16QAM	1	0	1	22.88
				1	49	1	22.74
				1	99	1	22.87
				50	0	2	21.12
				50	25	2	21.23
				50	49	2	21.28
				100	0	2	21.27

The results shown in this test report refer only to the sample(s) tested unless otherwise stated and the sample(s) are retained for 30 days only. The document is issued by AGC, this document cannot be reproduced except in full with our prior written permission. The more details and the authenticity of the report will be confirmed at http://www.agc-cert.com.

BW (MHz)	Ch	Freq. (MHz)	Mode	UL RB Allocation	UL RB Offset	MPR	Average power (dBm)
15MHz	37825	2577.5	QPSK	1	0	0	23.68
				1	37	0	23.48
				1	74	0	23.67
				36	0	1	21.42
				36	16	1	21.22
				36	35	1	21.35
				75	0	1	21.40
			16QAM	1	0	1	22.83
				1	37	1	22.88
				1	74	1	22.90
				36	0	2	21.42
				36	16	2	21.43
				36	35	2	21.37
				75	0	2	21.38
	38000	2595.0	QPSK	1	0	0	23.67
				1	37	0	23.42
				1	74	0	23.68
				36	0	1	21.52
				36	16	1	21.25
				36	35	1	21.37
				75	0	1	21.36
			16QAM	1	0	1	22.88
				1	37	1	22.54
				1	74	1	22.90
				36	0	2	21.53
				36	16	2	21.59
				36	35	2	21.39
				75	0	2	21.37
	38175	2612.5	QPSK	1	0	0	23.69
				1	37	0	23.57
				1	74	0	23.68
				36	0	1	21.25
				36	16	1	21.42
				36	35	1	21.37
				75	0	1	21.38
			16QAM	1	0	1	22.90
				1	37	1	22.85
				1	74	1	22.88
				36	0	2	21.42
				36	16	2	21.58
				36	35	2	21.33
				75	0	2	21.36

The results shown in this test report refer only to the sample(s) tested unless otherwise stated and the sample(s) are retained for 30 days only. The document is issued by AGC, this document cannot be reproduced except in full with our prior written permission. The more details and the authenticity of the report will be confirmed at http://www.agc-cert.com.

BW (MHz)	Ch	Freq. (MHz)	Mode	UL RB Allocation	UL RB Offset	MPR	Average power (dBm)
10MHz	37800	2575.0	QPSK	1	0	0	22.69
				1	24	0	22.67
				1	49	0	22.99
				25	0	1	22.12
				25	12	1	22.16
				25	25	1	22.00
				50	0	1	22.90
			16QAM	1	0	1	22.49
				1	24	1	22.18
				1	49	1	22.57
				25	0	2	21.03
				25	12	2	21.05
				25	25	2	21.27
				50	0	2	22.90
	38000	2595.0	QPSK	1	0	0	23.69
				1	24	0	23.27
				1	49	0	23.01
				25	0	1	21.25
				25	12	1	21.56
				25	25	1	21.99
				50	0	1	22.20
			16QAM	1	0	1	22.89
				1	24	1	22.56
				1	49	1	22.15
				25	0	2	21.08
				25	12	2	21.10
				25	25	2	21.05
				50	0	2	21.29
	38200	2615.0	QPSK	1	0	0	23.69
				1	24	0	23.55
				1	49	0	23.02
				25	0	1	22.11
				25	12	1	22.15
				25	25	1	22.01
				50	0	1	22.21
			16QAM	1	0	1	22.90
				1	24	1	22.59
				1	49	1	22.15
				25	0	2	21.25
				25	12	2	21.68
				25	25	2	21.02
				50	0	2	21.29

The results shown in this test report refer only to the sample(s) tested unless otherwise stated and the sample(s) are retained for 30 days only. The document is issued by AGC, this document cannot be reproduced except in full with our prior written permission. The more details and the authenticity of the report will be confirmed at http://www.agc-cert.com.

BW (MHz)	Ch	Freq. (MHz)	Mode	UL RB Allocation	UL RB Offset	MPR	Average power (dBm)
5MHz	37775	2572.5	QPSK	1	0	0	23.71
				1	12	0	23.42
				1	24	0	23.20
				12	0	1	23.22
				12	6	1	22.33
				12	11	1	23.28
				25	0	1	22.46
			16QAM	1	0	1	22.89
				1	12	1	22.45
				1	24	1	22.42
				12	0	2	22.47
				12	6	2	22.34
				12	11	2	22.32
				25	0	2	21.54
	38000	2595.0	QPSK	1	0	0	23.67
				1	12	0	23.54
				1	24	0	23.17
				12	0	1	23.15
				12	6	1	23.43
				12	11	1	23.26
				25	0	1	22.43
			16QAM	1	0	1	22.22
				1	12	1	22.15
				1	24	1	22.39
				12	0	2	22.25
				12	6	2	22.43
				12	11	2	22.29
				25	0	2	21.55
	38225	2617.5	QPSK	1	0	0	23.68
				1	12	0	23.57
				1	24	0	23.16
				12	0	1	23.64
				12	6	1	23.55
				12	11	1	23.23
				25	0	1	22.45
			16QAM	1	0	1	22.88
				1	12	1	22.48
				1	24	1	22.43
				12	0	2	22.45
				12	6	2	22.36
				12	11	2	22.29
				25	0	2	21.53

The results shown in this test report refer only to the sample(s) tested unless otherwise stated and the sample(s) are retained for 30 days only. The document is issued by AGC, this document cannot be reproduced except in full with our prior written permission. The more details and the authenticity of the report will be confirmed at http://www.agc-cert.com.

LTE Band 40

BW (MHz)	Ch	Freq. (MHz)	Mode	UL RB Allocation	UL RB Offset	MPR	Average power (dBm)
20MHz	38750	2310.0	QPSK	1	0	0	23.11
				1	49	0	23.16
				1	99	0	23.17
				50	0	1	20.56
				50	25	1	20.78
				50	49	1	20.81
				100	0	1	20.84
			16QAM	1	0	1	22.42
				1	49	1	20.25
				1	99	1	22.39
				50	0	2	20.78
				50	25	2	20.59
				50	49	2	20.82
				100	0	2	20.83
	39150	2350.0	QPSK	1	0	0	23.15
				1	49	0	23.13
				1	99	0	23.12
				50	0	1	20.79
				50	25	1	20.98
				50	49	1	20.83
				100	0	1	20.83
			16QAM	1	0	1	22.38
				1	49	1	22.42
				1	99	1	22.39
				50	0	2	20.79
				50	25	2	20.64
				50	49	2	20.82
				100	0	2	20.82
	39550	2390.0	QPSK	1	0	0	23.15
				1	49	0	23.16
				1	99	0	23.11
				50	0	1	20.85
				50	25	1	20.77
				50	49	1	20.81
				100	0	1	20.81
			16QAM	1	0	1	22.40
				1	49	1	20.41
				1	99	1	22.43
				50	0	2	20.49
				50	25	2	20.79
				50	49	2	20.83
				100	0	2	20.83

The results shown in this test report refer only to the sample(s) tested unless otherwise stated and the sample(s) are retained for 30 days only. The document is issued by AGC, this document cannot be reproduced except in full with our prior written permission. The more details and the authenticity of the report will be confirmed at http://www.agc-cert.com.

BW (MHz)	Ch	Freq. (MHz)	Mode	UL RB Allocation	UL RB Offset	MPR	Average power (dBm)
15MHz	38725	2307.5	QPSK	1	0	0	23.10
				1	37	0	20.14
				1	74	0	23.15
				36	0	1	20.88
				36	16	1	20.77
				36	35	1	20.87
				75	0	1	20.90
			16QAM	1	0	1	22.39
				1	37	1	22.42
				1	74	1	22.36
				36	0	2	20.42
				36	16	2	20.55
				36	35	2	20.89
				75	0	2	20.84
	39150	2350.0	QPSK	1	0	0	23.11
				1	37	0	23.17
				1	74	0	23.12
				36	0	1	20.67
				36	16	1	20.48
				36	35	1	20.87
				75	0	1	20.91
			16QAM	1	0	1	22.39
				1	37	1	22.25
				1	74	1	22.40
				36	0	2	20.85
				36	16	2	20.79
				36	35	2	20.89
				75	0	2	20.86
	39575	2392.5	QPSK	1	0	0	23.13
				1	37	0	23.10
				1	74	0	23.11
				36	0	1	20.44
				36	16	1	20.69
				36	35	1	20.86
				75	0	1	20.89
			16QAM	1	0	1	22.41
				1	37	1	22.25
				1	74	1	22.44
				36	0	2	20.49
				36	16	2	20.69
				36	35	2	20.89
				75	0	2	20.87

The results shown in this test report refer only to the sample(s) tested unless otherwise stated and the sample(s) are retained for 30 days only. The document is issued by AGC, this document cannot be reproduced except in full with our prior written permission. The more details and the authenticity of the report will be confirmed at http://www.agc-cert.com.

BW (MHz)	Ch	Freq. (MHz)	Mode	UL RB Allocation	UL RB Offset	MPR	Average power (dBm)
10MHz	38700	2305.0	QPSK	1	0	0	22.15
				1	24	0	22.63
				1	49	0	22.40
				25	0	1	21.42
				25	12	1	21.66
				25	25	1	21.46
				50	0	1	21.69
			16QAM	1	0	1	21.41
				1	24	1	21.56
				1	49	1	21.67
				25	0	2	20.53
				25	12	2	20.36
				25	25	2	20.57
				50	0	2	20.83
	39150	2350.0	QPSK	1	0	0	22.16
				1	24	0	22.59
				1	49	0	22.42
				25	0	1	21.65
				25	12	1	21.29
				25	25	1	21.45
				50	0	1	21.72
			16QAM	1	0	1	21.41
				1	24	1	21.61
				1	49	1	21.62
				25	0	2	21.52
				25	12	2	21.39
				25	25	2	20.57
				50	0	2	20.82
	39600	2395.0	QPSK	1	0	0	22.15
				1	24	0	22.45
				1	49	0	22.41
				25	0	1	21.59
				25	12	1	21.34
				25	25	1	21.43
				50	0	1	21.69
			16QAM	1	0	1	21.43
				1	24	1	21.56
				1	49	1	21.65
				25	0	2	20.53
				25	12	2	20.43
				25	25	2	20.57
				50	0	2	20.81

The results shown in this test report refer only to the sample(s) tested unless otherwise stated and the sample(s) are retained for 30 days only. The document is issued by AGC, this document cannot be reproduced except in full with our prior written permission. The more details and the authenticity of the report will be confirmed at http://www.agc-cert.com.

BW (MHz)	Ch	Freq. (MHz)	Mode	UL RB Allocation	UL RB Offset	MPR	Average power (dBm)
5MHz	38675	2302.5	QPSK	1	0	0	22.84
				1	12	0	22.56
				1	24	0	22.69
				12	0	1	22.45
				12	6	1	22.64
				12	11	1	22.75
				25	0	1	21.87
			16QAM	1	0	1	21.82
				1	12	1	21.98
				1	24	1	21.95
				12	0	2	21.59
				12	6	2	21.97
				12	11	2	21.82
				25	0	2	21.02
	39150	2350.0	QPSK	1	0	0	22.54
				1	12	0	22.58
				1	24	0	22.69
				12	0	1	22.56
				12	6	1	22.48
				12	11	1	22.72
				25	0	1	21.89
			16QAM	1	0	1	21.39
				1	12	1	21.45
				1	24	1	21.54
				12	0	2	21.44
				12	6	2	21.69
				12	11	2	21.83
				25	0	2	21.03
	39625	2397.5	QPSK	1	0	0	23.15
				1	12	0	23.12
				1	24	0	23.09
				12	0	1	22.36
				12	6	1	22.33
				12	11	1	22.74
				25	0	1	21.89
			16QAM	1	0	1	22.38
				1	12	1	22.44
				1	24	1	22.28
				12	0	2	21.44
				12	6	2	21.37
				12	11	2	21.60
				25	0	2	20.98

The results shown in this test report refer only to the sample(s) tested unless otherwise stated and the sample(s) are retained for 30 days only. The document is issued by AGC, this document cannot be reproduced except in full with our prior written permission. The more details and the authenticity of the report will be confirmed at http://www.agc-cert.com.

LTE Band 41

BW (MHz)	Ch	Freq. (MHz)	Mode	UL RB Allocation	UL RB Offset	MPR	Average power (dBm)
20MHz			QPSK	1	0	0	21.51
				1	49	0	21.45
				1	99	0	21.51
				50	0	1	20.66
				50	25	1	20.58
				50	49	1	20.72
				100	0	1	20.71
			16QAM	1	0	1	20.72
				1	49	1	20.74
				1	99	1	20.75
				50	0	2	19.52
				50	25	2	19.44
				50	49	2	19.70
				100	0	2	19.68
			QPSK	1	0	0	21.57
				1	49	0	21.54
				1	99	0	21.52
				50	0	1	20.49
				50	25	1	20.67
				50	49	1	20.73
				100	0	1	20.73
			16QAM	1	0	1	20.78
				1	49	1	20.69
				1	99	1	20.73
				50	0	2	19.55
				50	25	2	19.88
				50	49	2	19.70
				100	0	2	19.65
			QPSK	1	0	0	21.59
				1	49	0	21.54
				1	99	0	21.63
				50	0	1	20.53
				50	25	1	20.34
				50	49	1	20.68
				100	0	1	20.71
			16QAM	1	0	1	20.88
				1	49	1	20.58
				1	99	1	20.90
				50	0	2	19.58
				50	25	2	19.77
				50	49	2	19.71
				100	0	2	19.69

The results shown in this test report refer only to the sample(s) tested unless otherwise stated and the sample(s) are retained for 30 days only. The document is issued by AGC, this document cannot be reproduced except in full with our prior written permission. The more details and the authenticity of the report will be confirmed at http://www.agc-cert.com.

BW (MHz)	Ch	Freq. (MHz)	Mode	UL RB Allocation	UL RB Offset	MPR	Average power (dBm)
15MHz			QPSK	1	0	0	21.69
				1	37	0	21.45
				1	74	0	21.60
				36	0	1	20.66
				36	16	1	20.46
				36	35	1	20.72
				75	0	1	20.73
			16QAM	1	0	1	20.89
				1	37	1	20.77
				1	74	1	20.81
				36	0	2	19.59
				36	16	2	19.64
				36	35	2	19.67
				75	0	2	19.70
			QPSK	1	0	0	21.69
				1	37	0	21.56
				1	74	0	21.60
				36	0	1	20.58
				36	16	1	20.49
				36	35	1	20.72
				75	0	1	20.73
			16QAM	1	0	1	20.85
				1	37	1	20.46
				1	74	1	20.82
				36	0	2	19.57
				36	16	2	19.55
				36	35	2	19.69
				75	0	2	19.68
			QPSK	1	0	0	21.65
				1	37	0	21.54
				1	74	0	21.74
				36	0	1	20.78
				36	16	1	20.84
				36	35	1	20.78
				75	0	1	20.77
			16QAM	1	0	1	20.82
				1	37	1	20.69
				1	74	1	20.97
				36	0	2	19.88
				36	16	2	19.57
				36	35	2	19.77
				75	0	2	19.69

The results shown in this test report refer only to the sample(s) tested unless otherwise stated and the sample(s) are retained for 30 days only. The document is issued by AGC, this document cannot be reproduced except in full with our prior written permission. The more details and the authenticity of the report will be confirmed at http://www.agc-cert.com.

BW (MHz)	Ch	Freq. (MHz)	Mode	UL RB Allocation	UL RB Offset	MPR	Average power (dBm)
10MHz			QPSK	1	0	0	21.72
				1	24	0	21.83
				1	49	0	21.62
				25	0	1	20.55
				25	12	1	20.54
				25	25	1	20.67
				50	0	1	20.67
			16QAM	1	0	1	20.93
				1	24	1	20.76
				1	49	1	20.80
				25	0	2	19.45
				25	12	2	19.31
				25	25	2	19.66
				50	0	2	19.66
			QPSK	1	0	0	21.76
				1	24	0	21.53
				1	49	0	21.63
				25	0	1	20.67
				25	12	1	20.55
				25	25	1	20.66
				50	0	1	20.64
			16QAM	1	0	1	20.85
				1	24	1	20.69
				1	49	1	20.87
				25	0	2	19.53
				25	12	2	19.57
				25	25	2	19.63
				50	0	2	19.67
			QPSK	1	0	0	21.61
				1	24	0	21.55
				1	49	0	21.72
				25	0	1	20.59
				25	12	1	20.75
				25	25	1	20.73
				50	0	1	20.68
			16QAM	1	0	1	21.00
				1	24	1	21.11
				1	49	1	21.07
				25	0	2	19.56
				25	12	2	19.44
				25	25	2	19.74
				50	0	2	19.67

The results shown in this test report refer only to the sample(s) tested unless otherwise stated and the sample(s) are retained for 30 days only. The document is issued by AGC, this document cannot be reproduced except in full with our prior written permission. The more details and the authenticity of the report will be confirmed at http://www.agc-cert.com.

BW (MHz)	Ch	Freq. (MHz)	Mode	UL RB Allocation	UL RB Offset	MPR	Average power (dBm)
5MHz			QPSK	1	0	0	21.66
				1	12	0	21.54
				1	24	0	21.55
				12	0	1	20.33
				12	6	1	20.49
				12	11	1	20.58
				25	0	1	20.57
			16QAM	1	0	1	20.91
				1	12	1	20.76
				1	24	1	20.81
				12	0	2	19.62
				12	6	2	19.46
				12	11	2	19.69
				25	0	2	19.57
			QPSK	1	0	0	21.61
				1	12	0	20.53
				1	24	0	21.62
				12	0	1	20.45
				12	6	1	20.43
				12	11	1	20.59
				25	0	1	20.55
			16QAM	1	0	1	20.63
				1	12	1	20.69
				1	24	1	20.64
				12	0	2	19.55
				12	6	2	19.74
				12	11	2	19.60
				25	0	2	19.58
			QPSK	1	0	0	21.59
				1	12	0	21.46
				1	24	0	21.78
				12	0	1	21.55
				12	6	1	21.64
				12	11	1	20.69
				25	0	1	20.69
			16QAM	1	0	1	20.73
				1	12	1	20.74
				1	24	1	20.88
				12	0	2	19.31
				12	6	2	19.58
				12	11	2	19.77
				25	0	2	19.73

The results shown in this test report refer only to the sample(s) tested unless otherwise stated and the sample(s) are retained for 30 days only. The document is issued by AGC, this document cannot be reproduced except in full with our prior written permission. The more details and the authenticity of the report will be confirmed at http://www.agc-cert.com.

According to 3GPP 36.521 sub-clause 6.2.3.3, the maximum output power is allowed to be reduced by following the table.

Table 6.2.3.3-1: Maximum Power Reduction (MPR) for Power Class 3

Modulation	Channel bandwidth / Transmission bandwidth configuration [RB]						MPR (dB)
	1.4 MHz	3.0 MHz	5 MHz	10 MHz	15 MHz	20 MHz	
QPSK	> 5	> 4	> 8	> 12	> 16	> 18	≤ 1
16 QAM	≤ 5	≤ 4	≤ 8	≤ 12	≤ 16	≤ 18	≤ 1
16 QAM	> 5	> 4	> 8	> 12	> 16	> 18	≤ 2

The device supports MPR to solve linearity issues (ACLR or SEM) due to the higher peak-to average ratios (PAR) of the HSUPA signal. This prevents saturating the full range of the TX DAC inside of device and provides a reduced power output to the RF transceiver chip according to the Cubic Metric (For PRACH, PUCCH and SRS transmission, the allowed MPR is according to that specified for PUSCH QPSK modulation for the corresponding transmission bandwidth.).

When PRACH, PUCCH are present the beta gains on those channels are reduced firsts to try to get the power under the allowed limit. If the beta gains are lowered as far as possible, then a hard limiting is applied at the maximum allowed level.

For each subframe, the MPR is evaluated per slot and given by the maximum value taken over the transmission(s) within the slot, the maximum MPR over the two slots is then applied for the entire subframe.

For the UE maximum output power modified by MPR, the power limits specified in subclause 6.2.5.3 apply. The normative reference for this requirement is TS 36.101 clause 6.2.3.

The end effect is that the DUT output power is identical to the case where there is no MPR in the device.

The results shown in this test report refer only to the sample(s) tested unless otherwise stated and the sample(s) are retained for 30 days only. The document is issued by AGC, this document cannot be reproduced except in full with our prior written permission. The more details and the authenticity of the report will be confirmed at http://www.agc-cert.com.

6.2 RADIATED OUTPUT POWER

6.2.1 MEASUREMENT METHOD

The measurements procedures specified in ANSI/TIA-603-E-2016 were applied.

1 In an anechoic antenna test chamber, a half-wave dipole antenna for the frequency band of interest is placed at the reference centre of the chamber. An RF Signal source for the frequency band of interest is connected to the dipole with a cable that has been constructed to not interfere with the radiation pattern of the antenna. A known (measured) power (Pin) is applied to the input of the dipole, and the power received (Pr) at the chamber's probe antenna is recorded.

2 The substitution method is used. Substitution values at each frequency are measured before and saved to the test software. A "reference path loss" is established as ARpl=Pin + 2.15 - Pr. The ARpl is the attenuation of “reference path loss”, and including the gain of receive antenna, the cable loss and the air loss. The measurement results are obtained as described below: Power=PMea+ARpl

3 The EUT is substituted for the dipole at the reference centre of the chamber and a scan is performed to obtain the radiation pattern.

4 From the radiation pattern, the co-ordinates where the maximum antenna gain occurs are identified.

5 The EUT is then put into continuously transmitting mode at its maximum power level.

6 Power mode measurements are performed with the receiving antenna placed at the coordinates determined in Step 3 to determine the output power as defined in Rule 27.50(d)(4). The "reference path loss" from Step1 is added to this result.

7 This value is EIRP since the measurement is calibrated using a half-wave dipole antenna of known gain (2.15 dBi) and known input power (Pin).

8 ERP can be calculated from EIRP by subtracting the gain of the dipole, ERP = EIRP -2.15dBi..

Test Setup

NOTE: Effective radiated power (ERP) refers to the radiation power output of the EUT, assuming all emissions are radiated from half-wave dipole antennas.

The results shown in this test report refer only to the sample(s) tested unless otherwise stated and the sample(s) are retained for 30 days only. The document is issued by AGC, this document cannot be reproduced except in full with our prior written permission. The more details and the authenticity of the report will be confirmed at http://www.agc-cert.com.

Step 1: Pre-test

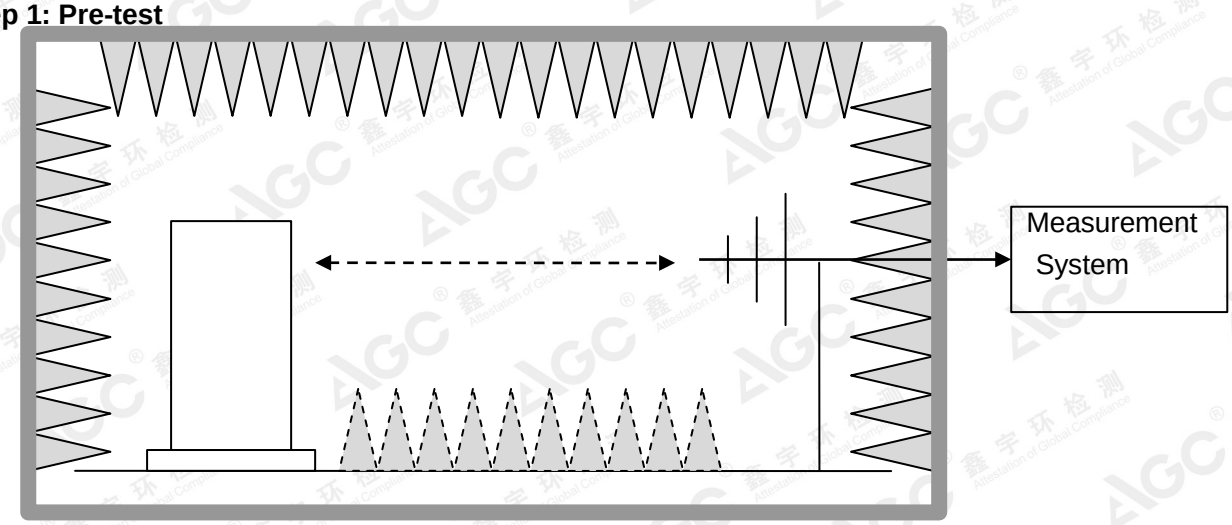

Step 2: Substitution method to verify the maximum ERP

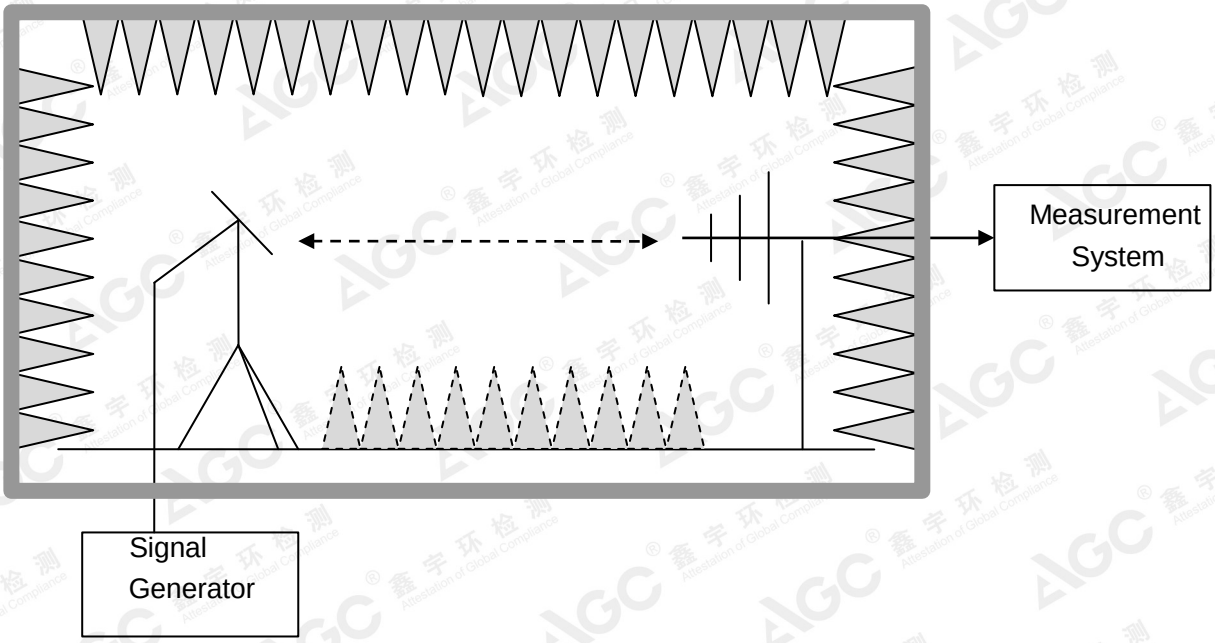

The results shown in this test report refer only to the sample(s) tested unless otherwise stated and the sample(s) are retained for 30 days only. The document is issued by AGC, this document cannot be reproduced except in full with our prior written permission. The more details and the authenticity of the report will be confirmed at http://www.agc-cert.com.

6.2.2 PROVISIONS APPLICABLE

Mode	FCC Part Section(s)	Nominal Peak Power
LTE Band 7	27.50(i)(2)	<=33dBm (2W)
LTE Band 17	27.50(c)	<=34.77dBm(3W)
LTE Band 38	27.50(i)(2)	<=33dBm (2W)
LTE Band 40	27.50(a)	<=33dBm (2W)
LTE Band 41	27.50(i)(2)	<=33dBm (2W)

The results shown in this test report refer only to the sample(s) tested unless otherwise stated and the sample(s) are retained for 30 days only. The document is issued by AGC, this document cannot be reproduced except in full with our prior written permission. The more details and the authenticity of the report will be confirmed at http://www.agc-cert.com.

6.2.3 MEASUREMENT RESULT

EIRP for LTE Band 7

Frequency	Channel Bandwidth	Mode.	RB	Substituted level	Antenna Polarization	Antenna Gain correction	Cable Loss	Absolute Level	Limit (dBm)
2502.5	5	QPSK	1/0	12.55	V	8.23	1.12	19.66	33
2535	5	QPSK	1/0	11.59	V	8.23	1.12	18.7	33
2567.5	5	QPSK	1/24	13.02	V	8.23	1.12	20.13	33
2502.5	5	QPSK	1/0	10.68	H	8.23	1.12	17.79	33
2535	5	QPSK	1/0	10.25	H	8.23	1.12	17.36	33
2567.5	5	QPSK	1/24	10.81	H	8.23	1.12	17.92	33
2502.5	5	16-QAM	1/0	11.63	V	8.23	1.12	18.74	33
2535	5	16-QAM	1/0	13.19	V	8.23	1.12	20.3	33
2567.5	5	16-QAM	1/24	10.61	V	8.23	1.12	17.72	33
2502.5	5	16-QAM	1/0	10.22	H	8.23	1.12	17.33	33
2535	5	16-QAM	1/0	10.03	H	8.23	1.12	17.14	33
2567.5	5	16-QAM	1/24	12.40	H	8.23	1.12	19.51	33
2505	10	QPSK	1/0	10.11	V	8.23	1.12	17.22	33
2535	10	QPSK	1/49	11.06	V	8.23	1.12	18.17	33
2565	10	QPSK	1/0	13.72	V	8.23	1.12	20.83	33
2505	10	QPSK	1/0	11.18	H	8.23	1.12	18.29	33
2535	10	QPSK	1/49	11.08	H	8.23	1.12	18.19	33
2565	10	QPSK	1/0	10.25	H	8.23	1.12	17.36	33
2505	10	16-QAM	1/0	11.12	V	8.23	1.12	18.23	33
2535	10	16-QAM	1/49	11.82	V	8.23	1.12	18.93	33
2565	10	16-QAM	1/0	12.37	V	8.23	1.12	19.48	33
2505	10	16-QAM	1/0	11.72	H	8.23	1.12	18.83	33
2535	10	16-QAM	1/49	15.70	H	8.23	1.12	22.81	33
2565	10	16-QAM	1/0	14.83	H	8.23	1.12	21.94	33
2507.5	15	QPSK	1/0	13.25	V	8.23	1.12	20.36	33
2535	15	QPSK	1/74	15.20	V	8.23	1.12	22.31	33
2562.5	15	QPSK	1/0	12.90	V	8.23	1.12	20.01	33
2507.5	15	QPSK	1/0	15.26	H	8.23	1.12	22.37	33
2535	15	QPSK	1/74	10.79	H	8.23	1.12	17.9	33
2562.5	15	QPSK	1/0	11.94	H	8.23	1.12	19.05	33
2507.5	15	16-QAM	1/0	11.38	V	8.23	1.12	18.49	33
2535	15	16-QAM	1/74	10.23	V	8.23	1.12	17.34	33
2562.5	15	16-QAM	1/0	9.18	V	8.23	1.12	16.29	33
2507.5	15	16-QAM	1/0	10.39	H	8.23	1.12	17.5	33

The results shown in this test report refer only to the sample(s) tested unless otherwise stated and the sample(s) are retained for 30 days only. The document is issued by AGC, this document cannot be reproduced except in full with our prior written permission. The more details and the authenticity of the report will be confirmed at http://www.agc-cert.com.

2535	15	16-QAM	1/74	9.62	H	8.23	1.12	16.73	33
2562.5	15	16-QAM	1/0	12.13	H	8.23	1.12	19.24	33
2510	20	QPSK	1/99	12.60	V	8.23	1.12	19.71	33
2535	20	QPSK	1/99	9.79	V	8.23	1.12	16.9	33
2560	20	QPSK	1/0	9.45	V	8.23	1.12	16.56	33
2510	20	QPSK	1/99	11.80	H	8.23	1.12	18.91	33
2535	20	QPSK	1/99	11.24	H	8.23	1.12	18.35	33
2560	20	QPSK	1/0	11.46	H	8.23	1.12	18.57	33
2510	20	16-QAM	1/99	12.26	V	8.23	1.12	19.37	33
2535	20	16-QAM	1/99	10.93	V	8.23	1.12	18.04	33
2560	20	16-QAM	1/0	10.41	V	8.23	1.12	17.52	33
2510	20	16-QAM	1/99	11.22	H	8.23	1.12	18.33	33
2535	20	16-QAM	1/99	12.33	H	8.23	1.12	19.44	33
2560	20	16-QAM	1/0	11.84	H	8.23	1.12	18.95	33

The results shown in this test report refer only to the sample(s) tested unless otherwise stated and the sample(s) are retained for 30 days only. The document is issued by AGC, this document cannot be reproduced except in full with our prior written permission. The more details and the authenticity of the report will be confirmed at http://www.agc-cert.com.

EIRP for LTE Band 17

Frequency	Channel BW	Mode.	RB	Substituted level	Antenna Polarization	Antenna Gain correction	Cable Loss	Absolute Level	Limit (dBm)
706.5	5	QPSK	1/0	9.84	H	6.7	0.49	16.05	34.77
710	5	QPSK	1/0	13.77	H	6.7	0.49	19.98	34.77
713.5	5	QPSK	1/0	13.51	H	6.7	0.49	19.72	34.77
706.5	5	QPSK	1/0	11.34	V	6.7	0.49	17.55	34.77
710	5	QPSK	1/0	8.88	V	6.7	0.49	15.09	34.77
713.5	5	QPSK	1/0	11.02	V	6.7	0.49	17.23	34.77
706.5	5	16-QAM	1/0	11.02	H	6.7	0.49	17.23	34.77
710	5	16-QAM	1/0	12.89	H	6.7	0.49	19.1	34.77
713.5	5	16-QAM	1/0	12.41	H	6.7	0.49	18.62	34.77
706.5	5	16-QAM	1/0	11.44	V	6.7	0.49	17.65	34.77
710	5	16-QAM	1/0	11.06	V	6.7	0.49	17.27	34.77
713.5	5	16-QAM	1/0	12.33	V	6.7	0.49	18.54	34.77
709	10	QPSK	1/0	12.08	H	6.7	0.49	18.29	34.77
710	10	QPSK	1/0	12.50	H	6.7	0.49	18.71	34.77
711	10	QPSK	1/0	11.45	H	6.7	0.49	17.66	34.77
709	10	QPSK	1/0	13.17	V	6.7	0.49	19.38	34.77
710	10	QPSK	1/0	11.37	V	6.7	0.49	17.58	34.77
711	10	QPSK	1/0	11.07	V	6.7	0.49	17.28	34.77
709	10	16-QAM	1/0	13.64	H	6.7	0.49	19.85	34.77
710	10	16-QAM	1/0	12.30	H	6.7	0.49	18.51	34.77
711	10	16-QAM	1/0	14.37	H	6.7	0.49	20.58	34.77
709	10	16-QAM	1/0	11.96	V	6.7	0.49	18.17	34.77
710	10	16-QAM	1/0	12.74	V	6.7	0.49	18.95	34.77
711	10	16-QAM	1/0	15.80	V	6.7	0.49	22.01	34.77

The results shown in this test report refer only to the sample(s) tested unless otherwise stated and the sample(s) are retained for 30 days only. The document is issued by AGC, this document cannot be reproduced except in full with our prior written permission. The more details and the authenticity of the report will be confirmed at http://www.agc-cert.com.

EIRP for LTE Band 38

Frequency	Channel Bandwidth	Mode.	RB	Substituted level	Antenna Polarization	Antenna Gain correction	Cable Loss	Absolute Level	Limit (dBm)
2572.5	5	QPSK	1/0	10.97	V	8.23	1.12	18.08	33
2595	5	QPSK	1/0	9.25	V	8.23	1.12	16.36	33
2617.5	5	QPSK	1/24	11.61	V	8.23	1.12	18.72	33
2572.5	5	QPSK	1/0	12.26	H	8.23	1.12	19.37	33
2595	5	QPSK	1/0	9.93	H	8.23	1.12	17.04	33
2617.5	5	QPSK	1/24	9.39	H	8.23	1.12	16.50	33
2572.5	5	16-QAM	1/0	10.85	V	8.23	1.12	17.96	33
2595	5	16-QAM	1/0	11.09	V	8.23	1.12	18.20	33
2617.5	5	16-QAM	1/24	12.25	V	8.23	1.12	19.36	33
2572.5	5	16-QAM	1/0	10.26	H	8.23	1.12	17.37	33
2595	5	16-QAM	1/0	10.86	H	8.23	1.12	17.97	33
2617.5	5	16-QAM	1/24	9.67	H	8.23	1.12	16.78	33
2575	10	QPSK	1/0	11.86	V	8.23	1.12	18.97	33
2595	10	QPSK	1/49	12.31	V	8.23	1.12	19.42	33
2615	10	QPSK	1/0	11.98	V	8.23	1.12	19.09	33
2575	10	QPSK	1/0	10.06	H	8.23	1.12	17.17	33
2595	10	QPSK	1/49	10.60	H	8.23	1.12	17.71	33
2615	10	QPSK	1/0	10.36	H	8.23	1.12	17.47	33
2575	10	16-QAM	1/0	9.89	V	8.23	1.12	17.00	33
2595	10	16-QAM	1/49	10.63	V	8.23	1.12	17.74	33
2615	10	16-QAM	1/0	11.46	V	8.23	1.12	18.57	33
2575	10	16-QAM	1/0	10.32	H	8.23	1.12	17.43	33
2595	10	16-QAM	1/49	13.89	H	8.23	1.12	21.00	33
2615	10	16-QAM	1/0	10.93	H	8.23	1.12	18.04	33
2577.5	15	QPSK	1/0	12.13	V	8.23	1.12	19.24	33
2595	15	QPSK	1/74	12.75	V	8.23	1.12	19.86	33
2612.5	15	QPSK	1/0	12.01	V	8.23	1.12	19.12	33
2577.5	15	QPSK	1/0	12.48	H	8.23	1.12	19.59	33
2595	15	QPSK	1/74	12.14	H	8.23	1.12	19.25	33
2612.5	15	QPSK	1/0	11.61	H	8.23	1.12	18.72	33
2577.5	15	16-QAM	1/0	9.36	V	8.23	1.12	16.47	33
2595	15	16-QAM	1/74	9.78	V	8.23	1.12	16.89	33
2612.5	15	16-QAM	1/0	10.12	V	8.23	1.12	17.23	33
2577.5	15	16-QAM	1/0	10.70	H	8.23	1.12	17.81	33
2595	15	16-QAM	1/74	11.55	H	8.23	1.12	18.66	33
2612.5	15	16-QAM	1/0	11.89	H	8.23	1.12	19.00	33

The results shown in this test report refer only to the sample(s) tested unless otherwise stated and the sample(s) are retained for 30 days only. The document is issued by AGC, this document cannot be reproduced except in full with our prior written permission. The more details and the authenticity of the report will be confirmed at http://www.agc-cert.com.

2580	20	QPSK	1/99	11.61	V	8.23	1.12	18.72	33
2595	20	QPSK	1/99	10.45	V	8.23	1.12	17.56	33
2610	20	QPSK	1/0	9.88	V	8.23	1.12	16.99	33
2580	20	QPSK	1/99	12.47	H	8.23	1.12	19.58	33
2595	20	QPSK	1/99	11.55	H	8.23	1.12	18.66	33
2610	20	QPSK	1/0	10.18	H	8.23	1.12	17.29	33
2580	20	16-QAM	1/99	10.26	V	8.23	1.12	17.37	33
2595	20	16-QAM	1/99	11.28	V	8.23	1.12	18.39	33
2610	20	16-QAM	1/0	10.33	V	8.23	1.12	17.44	33
2580	20	16-QAM	1/99	12.48	H	8.23	1.12	19.59	33
2595	20	16-QAM	1/99	10.14	H	8.23	1.12	17.25	33
2610	20	16-QAM	1/0	9.40	H	8.23	1.12	16.51	33

The results shown in this test report refer only to the sample(s) tested unless otherwise stated and the sample(s) are retained for 30 days only. The document is issued by AGC, this document cannot be reproduced except in full with our prior written permission. The more details and the authenticity of the report will be confirmed at http://www.agc-cert.com.

EIRP for LTE Band 40

Frequency	Channel Bandwidth	Mode.	RB	Substituted level	Antenna Polarization	Antenna Gain correction	Cable Loss	Absolute Level	Limit (dBm)
2302.5	5	QPSK	1/0	11.65	V	8.17	1.09	18.73	33
2350	5	QPSK	1/0	12.37	V	8.17	1.09	19.45	33
2397.5	5	QPSK	1/24	10.34	V	8.17	1.09	17.42	33
2302.5	5	QPSK	1/0	11.50	H	8.17	1.09	18.58	33
2350	5	QPSK	1/0	11.54	H	8.17	1.09	18.62	33
2397.5	5	QPSK	1/24	12.30	H	8.17	1.09	19.38	33
2302.5	5	16-QAM	1/0	12.14	V	8.17	1.09	19.22	33
2350	5	16-QAM	1/0	11.00	V	8.17	1.09	18.08	33
2397.5	5	16-QAM	1/24	10.76	V	8.17	1.09	17.84	33
2302.5	5	16-QAM	1/0	10.03	H	8.17	1.09	17.11	33
2350	5	16-QAM	1/0	10.74	H	8.17	1.09	17.82	33
2397.5	5	16-QAM	1/24	11.18	H	8.17	1.09	18.26	33
2305	10	QPSK	1/0	13.07	V	8.17	1.09	20.15	33
2350	10	QPSK	1/49	11.22	V	8.17	1.09	18.30	33
2395	10	QPSK	1/0	10.81	V	8.17	1.09	17.89	33
2305	10	QPSK	1/0	12.71	H	8.17	1.09	19.79	33
2350	10	QPSK	1/49	12.04	H	8.17	1.09	19.12	33
2395	10	QPSK	1/0	11.15	H	8.17	1.09	18.23	33
2305	10	16-QAM	1/0	12.71	V	8.17	1.09	19.79	33
2350	10	16-QAM	1/49	12.52	V	8.17	1.09	19.60	33
2395	10	16-QAM	1/0	11.20	V	8.17	1.09	18.28	33
2305	10	16-QAM	1/0	13.15	H	8.17	1.09	20.23	33
2350	10	16-QAM	1/49	15.29	H	8.17	1.09	22.37	33
2395	10	16-QAM	1/0	13.33	H	8.17	1.09	20.41	33
2307.5	15	QPSK	1/0	12.74	V	8.17	1.09	19.82	33
2350	15	QPSK	1/74	13.66	V	8.17	1.09	20.74	33
2392.5	15	QPSK	1/0	11.69	V	8.17	1.09	18.77	33
2307.5	15	QPSK	1/0	12.86	H	8.17	1.09	19.94	33
2350	15	QPSK	1/74	11.15	H	8.17	1.09	18.23	33
2392.5	15	QPSK	1/0	12.49	H	8.17	1.09	19.57	33
2307.5	15	16-QAM	1/0	12.74	V	8.17	1.09	19.82	33
2350	15	16-QAM	1/74	9.80	V	8.17	1.09	16.88	33
2392.5	15	16-QAM	1/0	11.63	V	8.17	1.09	18.71	33
2307.5	15	16-QAM	1/0	10.56	H	8.17	1.09	17.64	33
2350	15	16-QAM	1/74	13.14	H	8.17	1.09	20.22	33
2392.5	15	16-QAM	1/0	10.72	H	8.17	1.09	17.80	33

The results shown in this test report refer only to the sample(s) tested unless otherwise stated and the sample(s) are retained for 30 days only. The document is issued by AGC, this document cannot be reproduced except in full with our prior written permission. The more details and the authenticity of the report will be confirmed at http://www.agc-cert.com.

2310	20	QPSK	1/99	11.34	V	8.17	1.09	18.42	33
2350	20	QPSK	1/99	12.08	V	8.17	1.09	19.16	33
2390	20	QPSK	1/0	12.75	V	8.17	1.09	19.83	33
2310	20	QPSK	1/99	10.77	H	8.17	1.09	17.85	33
2350	20	QPSK	1/99	11.28	H	8.17	1.09	18.36	33
2390	20	QPSK	1/0	12.29	H	8.17	1.09	19.37	33
2310	20	16-QAM	1/99	10.46	V	8.17	1.09	17.54	33
2350	20	16-QAM	1/99	11.17	V	8.17	1.09	18.25	33
2390	20	16-QAM	1/0	10.71	V	8.17	1.09	17.79	33
2310	20	16-QAM	1/99	11.50	H	8.17	1.09	18.58	33
2350	20	16-QAM	1/99	11.30	H	8.17	1.09	18.38	33
2390	20	16-QAM	1/0	11.52	H	8.17	1.09	18.60	33

The results shown in this test report refer only to the sample(s) tested unless otherwise stated and the sample(s) are retained for 30 days only. The document is issued by AGC, this document cannot be reproduced except in full with our prior written permission. The more details and the authenticity of the report will be confirmed at http://www.agc-cert.com.

EIRP for LTE Band 41

Frequency	Channel Bandwidth	Mode.	RB	Substituted level	Antenna Polarization	Antenna Gain correction	Cable Loss	Absolute Level	Limit (dBm)
2498.5	5	QPSK	1/0	13.21	V	8.20	1.11	20.30	33
2593	5	QPSK	1/0	12.85	V	8.20	1.11	19.94	33
2687.5	5	QPSK	1/24	13.07	V	8.20	1.11	20.16	33
2498.5	5	QPSK	1/0	13.25	H	8.20	1.11	20.34	33
2593	5	QPSK	1/0	12.99	H	8.20	1.11	20.08	33
2687.5	5	QPSK	1/24	11.41	H	8.20	1.11	18.50	33
2498.5	5	16-QAM	1/0	11.63	V	8.20	1.11	18.72	33
2593	5	16-QAM	1/0	13.96	V	8.20	1.11	21.05	33
2687.5	5	16-QAM	1/24	12.38	V	8.20	1.11	19.47	33
2498.5	5	16-QAM	1/0	9.40	H	8.20	1.11	16.49	33
2593	5	16-QAM	1/0	11.86	H	8.20	1.11	18.95	33
2687.5	5	16-QAM	1/24	12.07	H	8.20	1.11	19.16	33
2501	10	QPSK	1/0	11.59	V	8.20	1.11	18.68	33
2593	10	QPSK	1/49	11.91	V	8.20	1.11	19.00	33
2685	10	QPSK	1/0	11.61	V	8.20	1.11	18.70	33
2501	10	QPSK	1/0	10.56	H	8.20	1.11	17.65	33
2593	10	QPSK	1/49	12.81	H	8.20	1.11	19.90	33
2685	10	QPSK	1/0	11.62	H	8.20	1.11	18.71	33
2501	10	16-QAM	1/0	10.18	V	8.20	1.11	17.27	33
2593	10	16-QAM	1/49	14.26	V	8.20	1.11	21.35	33
2685	10	16-QAM	1/0	12.28	V	8.20	1.11	19.37	33
2501	10	16-QAM	1/0	12.36	H	8.20	1.11	19.45	33
2593	10	16-QAM	1/49	12.40	H	8.20	1.11	19.49	33
2685	10	16-QAM	1/0	13.45	H	8.20	1.11	20.54	33
2503.5	15	QPSK	1/0	13.31	V	8.20	1.11	20.40	33
2593	15	QPSK	1/74	13.63	V	8.20	1.11	20.72	33
2682.5	15	QPSK	1/0	15.30	V	8.20	1.11	22.39	33
2503.5	15	QPSK	1/0	14.49	H	8.20	1.11	21.58	33
2593	15	QPSK	1/74	12.32	H	8.20	1.11	19.41	33
2682.5	15	QPSK	1/0	13.30	H	8.20	1.11	20.39	33
2503.5	15	16-QAM	1/0	13.06	V	8.20	1.11	20.15	33
2593	15	16-QAM	1/74	13.11	V	8.20	1.11	20.20	33
2682.5	15	16-QAM	1/0	10.76	V	8.20	1.11	17.85	33
2503.5	15	16-QAM	1/0	12.00	H	8.20	1.11	19.09	33
2593	15	16-QAM	1/74	13.77	H	8.20	1.11	20.86	33
2682.5	15	16-QAM	1/0	12.10	H	8.20	1.11	19.19	33

The results shown in this test report refer only to the sample(s) tested unless otherwise stated and the sample(s) are retained for 30 days only. The document is issued by AGC, this document cannot be reproduced except in full with our prior written permission. The more details and the authenticity of the report will be confirmed at http://www.agc-cert.com.

2506	20	QPSK	1/99	10.93	V	8.20	1.11	18.02	33
2593	20	QPSK	1/99	10.52	V	8.20	1.11	17.61	33
2680	20	QPSK	1/0	12.84	V	8.20	1.11	19.93	33
2506	20	QPSK	1/99	11.21	H	8.20	1.11	18.30	33
2593	20	QPSK	1/99	11.94	H	8.20	1.11	19.03	33
2680	20	QPSK	1/0	11.53	H	8.20	1.11	18.62	33
2506	20	16-QAM	1/99	11.31	V	8.20	1.11	18.40	33
2593	20	16-QAM	1/99	14.20	V	8.20	1.11	21.29	33
2680	20	16-QAM	1/0	11.74	V	8.20	1.11	18.83	33
2506	20	16-QAM	1/99	12.08	H	8.20	1.11	19.17	33
2593	20	16-QAM	1/99	10.99	H	8.20	1.11	18.08	33
2680	20	16-QAM	1/0	11.68	H	8.20	1.11	18.77	33

Note: Above is the worst mode data.

The results shown in this test report refer only to the sample(s) tested unless otherwise stated and the sample(s) are retained for 30 days only. The document is issued by AGC, this document cannot be reproduced except in full with our prior written permission. The more details and the authenticity of the report will be confirmed at http://www.agc-cert.com.

6.3. PEAK-TO-AVERAGE RATIO

6.3.1 MEASUREMENT METHOD

The peak-to-average power ratio (PAPR) of the transmitter output power must not exceed 13 dB. The PAPR measurements should be made using either an instrument with complementary cumulative distribution function (CCDF) capabilities to determine that PAPR will not exceed 13 dB for more than 0.1 percent of the time or other Commission approved procedure. The measurement must be performed using a signal corresponding to the highest PAPR expected during periods of continuous transmission.

According to KDB 971168 D01v03 - Section 5.7:

a)Refer to instrument’s analyzer instruction manual for details on how to use the power statistics /CCDF function;

b) Set resolution/measurement bandwidth ≥ signal’s occupied bandwidth;

c) Set the number of counts to a value that stabilizes the measured CCDF curve;

d) Set the measurement interval to 1 ms

e) Record the maximum PAPR level associated with a probability of 0.1%

6.3.2 PROVISIONS APPLICABLE

This is the test for the Peak-to-Average Ratio from the EUT.

Power Complementary Cumulative Distribution Function (CCDF) curves provide a means for characterizing the power peaks of a digitally modulated signal on a statistical basis. A CCDF curve depicts the probability of the peak signal amplitude exceeding the average power level. Most contemporary measurement instrumentation include the capability to produce CCDF curves for an input signal provided that the instrument’s resolution bandwidth can be set wide enough to accommodate the entire input signal bandwidth. In measuring transmissions in this band using an average power technique, the peak-to-average ratio (PAR) of the transmission may not exceed 13 dB.

The results shown in this test report refer only to the sample(s) tested unless otherwise stated and the sample(s) are retained for 30 days only. The document is issued by AGC, this document cannot be reproduced except in full with our prior written permission. The more details and the authenticity of the report will be confirmed at http://www.agc-cert.com.

6.3.3 MEASUREMENT RESULT

LTE BAND 7
Channel Bandwidth: 5 MHz

Channel Bandwidth: 5 MHz						
Modulation	Channel	RB Configuration		Peak-to-Average Ratio [dB]	Limit [dB]	Verdict
		Size	Offset			
QPSK	LCH	1	0	3.84	<13	PASS
		1	12	3.93	<13	PASS
		1	24	4.02	<13	PASS
		12	0	4.25	<13	PASS
		12	6	4.56	<13	PASS
		12	13	4.88	<13	PASS
		25	0	4.97	<13	PASS
	MCH	1	0	4.67	<13	PASS
		1	12	4.58	<13	PASS
		1	24	4.74	<13	PASS
		12	0	4.69	<13	PASS
		12	6	4.31	<13	PASS
		12	13	5.12	<13	PASS
		25	0	5.26	<13	PASS
	HCH	1	0	4.13	<13	PASS
		1	12	4.12	<13	PASS
		1	24	4.09	<13	PASS
		12	0	4.86	<13	PASS
		12	6	4.95	<13	PASS
		12	13	4.80	<13	PASS
		25	0	4.97	<13	PASS
16QAM	LCH	1	0	4.79	<13	PASS
		1	12	4.66	<13	PASS
		1	24	5.15	<13	PASS
		12	0	5.32	<13	PASS
		12	6	5.35	<13	PASS
		12	13	5.68	<13	PASS
		25	0	5.75	<13	PASS
	MCH	1	0	5.12	<13	PASS
		1	12	5.33	<13	PASS
		1	24	5.42	<13	PASS
		12	0	6.23	<13	PASS
		12	6	6.11	<13	PASS

The results shown in this test report refer only to the sample(s) tested unless otherwise stated and the sample(s) are retained for 30 days only. The document is issued by AGC, this document cannot be reproduced except in full with our prior written permission. The more details and the authenticity of the report will be confirmed at http://www.agc-cert.com.

		12	13	6.03	<13	PASS
		25	0	6.08	<13	PASS
	HCH	1	0	5.31	<13	PASS
		1	12	5.25	<13	PASS
		1	24	5.07	<13	PASS
		12	0	5.45	<13	PASS
		12	6	5.23	<13	PASS
		12	13	5.66	<13	PASS
		25	0	5.80	<13	PASS

Channel Bandwidth: 10 MHz

Channel Bandwidth: 10 MHz						
Modulation	Channel	RB Configuration		Peak-to-Average Ratio [dB]	Limit [dB]	Verdict
		Size	Offset			
QPSK	LCH	1	0	3.92	<13	PASS
		1	24	4.20	<13	PASS
		1	49	4.19	<13	PASS
		25	0	4.23	<13	PASS
		25	12	4.16	<13	PASS
		25	25	4.85	<13	PASS
		50	0	4.91	<13	PASS
	MCH	1	0	4.46	<13	PASS
		1	24	4.22	<13	PASS
		1	49	4.59	<13	PASS
		25	0	4.16	<13	PASS
		25	12	5.21	<13	PASS
		25	25	5.18	<13	PASS
		50	0	5.21	<13	PASS
	HCH	1	0	3.98	<13	PASS
		1	24	4.13	<13	PASS
		1	49	3.89	<13	PASS
		25	0	4.39	<13	PASS
		25	12	4.56	<13	PASS
		25	25	4.85	<13	PASS
		50	0	4.92	<13	PASS
16QAM	LCH	1	0	4.61	<13	PASS
		1	24	4.56	<13	PASS
		1	49	5.12	<13	PASS
		25	0	5.11	<13	PASS

The results shown in this test report refer only to the sample(s) tested unless otherwise stated and the sample(s) are retained for 30 days only. The document is issued by AGC, this document cannot be reproduced except in full with our prior written permission. The more details and the authenticity of the report will be confirmed at http://www.agc-cert.com.

		25	12	5.36	<13	PASS
		25	25	5.87	<13	PASS
		50	0	5.8	<13	PASS
	MCH	1	0	5.56	<13	PASS
		1	24	5.33	<13	PASS
		1	49	5.19	<13	PASS
		25	0	6.11	<13	PASS
		25	12	6.03	<13	PASS
		25	25	6.05	<13	PASS
		50	0	6.10	<13	PASS
	HCH	1	0	5.42	<13	PASS
		1	24	4.89	<13	PASS
		1	49	4.91	<13	PASS
		25	0	5.33	<13	PASS
		25	12	5.16	<13	PASS
		25	25	5.73	<13	PASS
		50	0	5.76	<13	PASS

Channel Bandwidth: 15 MHz

Channel Bandwidth: 15 MHz						
Modulation	Channel	RB Configuration		Peak-to-Average Ratio [dB]	Limit [dB]	Verdict
		Size	Offset			
QPSK	LCH	1	0	3.85	<13	PASS
		1	37	3.56	<13	PASS
		1	74	4.15	<13	PASS
		37	0	4.11	<13	PASS
		37	18	4.63	<13	PASS
		37	38	4.89	<13	PASS
		75	0	5.28	<13	PASS
	MCH	1	0	4.57	<13	PASS
		1	37	4.66	<13	PASS
		1	74	4.81	<13	PASS
		37	0	4.59	<13	PASS
		37	18	4.99	<13	PASS
		37	38	5.16	<13	PASS
		75	0	5.54	<13	PASS
	HCH	1	0	4.29	<13	PASS
		1	37	4.37	<13	PASS
		1	74	3.99	<13	PASS

The results shown in this test report refer only to the sample(s) tested unless otherwise stated and the sample(s) are retained for 30 days only. The document is issued by AGC, this document cannot be reproduced except in full with our prior written permission. The more details and the authenticity of the report will be confirmed at http://www.agc-cert.com.

		37	0	4.75	<13	PASS
		37	18	4.69	<13	PASS
		37	38	4.83	<13	PASS
		75	0	5.24	<13	PASS
16QAM	LCH	1	0	4.83	<13	PASS
		1	37	4.58	<13	PASS
		1	74	4.96	<13	PASS
		37	0	5.11	<13	PASS
		37	18	5.31	<13	PASS
		37	38	5.72	<13	PASS
		75	0	5.98	<13	PASS
	MCH	1	0	5.62	<13	PASS
		1	37	5.25	<13	PASS
		1	74	5.64	<13	PASS
		37	0	5.58	<13	PASS
		37	18	5.46	<13	PASS
		37	38	5.93	<13	PASS
		75	0	6.18	<13	PASS
	HCH	1	0	5.38	<13	PASS
		1	37	5.26	<13	PASS
		1	74	5.14	<13	PASS
		37	0	5.34	<13	PASS
		37	18	5.15	<13	PASS
		37	38	5.76	<13	PASS
		75	0	5.98	<13	PASS

Channel Bandwidth: 20 MHz

Channel Bandwidth: 20 MHz						
Modulation	Channel	RB Configuration		Peak-to-Average Ratio [dB]	Limit [dB]	Verdict
		Size	Offset			
QPSK	LCH	1	0	4.01	<13	PASS
		1	49	4.27	<13	PASS
		1	99	4.43	<13	PASS
		50	0	4.39	<13	PASS
		50	25	4.55	<13	PASS
		50	50	4.98	<13	PASS
		100	0	5.28	<13	PASS
	MCH	1	0	4.43	<13	PASS
		1	49	4.15	<13	PASS

The results shown in this test report refer only to the sample(s) tested unless otherwise stated and the sample(s) are retained for 30 days only. The document is issued by AGC, this document cannot be reproduced except in full with our prior written permission. The more details and the authenticity of the report will be confirmed at http://www.agc-cert.com.

		1	99	4.62	<13	PASS
		50	0	4.36	<13	PASS
		50	25	4.25	<13	PASS
		50	50	5.23	<13	PASS
		100	0	5.42	<13	PASS
	HCH	1	0	4.41	<13	PASS
		1	49	4.44	<13	PASS
		1	99	4.16	<13	PASS
		50	0	4.29	<13	PASS
		50	25	4.33	<13	PASS
		50	50	5.01	<13	PASS
		100	0	5.28	<13	PASS
16QAM	LCH	1	0	4.93	<13	PASS
		1	49	5.10	<13	PASS
		1	99	5.03	<13	PASS
		50	0	5.66	<13	PASS
		50	25	5.89	<13	PASS
		50	50	5.85	<13	PASS
		100	0	6.02	<13	PASS
	MCH	1	0	5.69	<13	PASS
		1	49	5.36	<13	PASS
		1	99	5.74	<13	PASS
		50	0	5.94	<13	PASS
		50	25	5.33	<13	PASS
		50	50	5.99	<13	PASS
		100	0	6.18	<13	PASS
	HCH	1	0	4.84	<13	PASS
		1	49	4.69	<13	PASS
		1	99	5.18	<13	PASS
		50	0	5.25	<13	PASS
		50	25	5.64	<13	PASS
		50	50	5.87	<13	PASS
		100	0	6.06	<13	PASS

The results shown in this test report refer only to the sample(s) tested unless otherwise stated and the sample(s) are retained for 30 days only. The document is issued by AGC, this document cannot be reproduced except in full with our prior written permission. The more details and the authenticity of the report will be confirmed at http://www.agc-cert.com.

LTE BAND 17

Channel Bandwidth: 5 MHz

Channel Bandwidth: 5 MHz						
Modulation	Channel	RB Configuration		Peak-to-Average Ratio [dB]	Limit [dB]	Verdict
		Size	Offset			
QPSK	LCH	1	0	3.98	<13	PASS
		1	12	3.56	<13	PASS
		1	24	3.64	<13	PASS
		12	0	4.55	<13	PASS
		12	6	4.53	<13	PASS
		12	13	4.73	<13	PASS
		25	0	4.78	<13	PASS
	MCH	1	0	3.79	<13	PASS
		1	12	3.56	<13	PASS
		1	24	4.13	<13	PASS
		12	0	4.16	<13	PASS
		12	6	4.99	<13	PASS
		12	13	4.83	<13	PASS
		25	0	5.13	<13	PASS
	HCH	1	0	4.27	<13	PASS
		1	12	4.28	<13	PASS
		1	24	4.07	<13	PASS
		12	0	4.56	<13	PASS
		12	6	4.65	<13	PASS
		12	13	4.98	<13	PASS
		25	0	5.18	<13	PASS
16QAM	LCH	1	0	3.88	<13	PASS
		1	12	3.99	<13	PASS
		1	24	4.53	<13	PASS
		12	0	4.52	<13	PASS
		12	6	4.34	<13	PASS
		12	13	5.51	<13	PASS
		25	0	5.53	<13	PASS
	MCH	1	0	4.41	<13	PASS
		1	12	4.35	<13	PASS
		1	24	4.85	<13	PASS
		12	0	4.77	<13	PASS
		12	6	4.69	<13	PASS
		12	13	5.75	<13	PASS

The results shown in this test report refer only to the sample(s) tested unless otherwise stated and the sample(s) are retained for 30 days only. The document is issued by AGC, this document cannot be reproduced except in full with our prior written permission. The more details and the authenticity of the report will be confirmed at http://www.agc-cert.com.

		25	0	6.23	<13	PASS
	HCH	1	0	5.19	<13	PASS
		1	12	5.23	<13	PASS
		1	24	5.16	<13	PASS
		12	0	5.25	<13	PASS
		12	6	5.35	<13	PASS
		12	13	5.81	<13	PASS
		25	0	5.97	<13	PASS

Channel Bandwidth: 10 MHz

Channel Bandwidth: 10 MHz						
Modulation	Channel	RB Configuration		Peak-to-Average Ratio [dB]	Limit [dB]	Verdict
		Size	Offset			
QPSK	LCH	1	0	3.12	<13	PASS
		1	24	3.23	<13	PASS
		1	49	4.11	<13	PASS
		25	0	4.23	<13	PASS
		25	12	4.26	<13	PASS
		25	25	4.55	<13	PASS
		50	0	4.49	<13	PASS
	MCH	1	0	4.55	<13	PASS
		1	24	4.96	<13	PASS
		1	49	4.58	<13	PASS
		25	0	5.11	<13	PASS
		25	12	5.52	<13	PASS
		25	25	5.36	<13	PASS
		50	0	4.56	<13	PASS
	HCH	1	0	5.23	<13	PASS
		1	24	5.11	<13	PASS
		1	49	5.54	<13	PASS
		25	0	4.56	<13	PASS
		25	12	4.58	<13	PASS
		25	25	4.69	<13	PASS
		50	0	5.21	<13	PASS
16QAM	LCH	1	0	5.27	<13	PASS
		1	24	5.11	<13	PASS
		1	49	4.56	<13	PASS
		25	0	4.28	<13	PASS
		25	12	4.36	<13	PASS

The results shown in this test report refer only to the sample(s) tested unless otherwise stated and the sample(s) are retained for 30 days only. The document is issued by AGC, this document cannot be reproduced except in full with our prior written permission. The more details and the authenticity of the report will be confirmed at http://www.agc-cert.com.

		25	25	5.11	<13	PASS
		50	0	5.12	<13	PASS
	MCH	1	0	4.25	<13	PASS
		1	24	4.36	<13	PASS
		1	49	4.44	<13	PASS
		25	0	3.99	<13	PASS
		25	12	4.12	<13	PASS
		25	25	4.16	<13	PASS
		50	0	5.25	<13	PASS
	HCH	1	0	5.11	<13	PASS
		1	24	5.69	<13	PASS
		1	49	5.48	<13	PASS
		25	0	4.33	<13	PASS
		25	12	5.48	<13	PASS
		25	25	4.69	<13	PASS
		50	0	5.52	<13	PASS

The results shown in this test report refer only to the sample(s) tested unless otherwise stated and the sample(s) are retained for 30 days only. The document is issued by AGC, this document cannot be reproduced except in full with our prior written permission. The more details and the authenticity of the report will be confirmed at http://www.agc-cert.com.

LTE BAND 38

Channel Bandwidth: 5 MHz

Channel Bandwidth: 5 MHz						
Modulation	Channel	RB Configuration		Peak-to-Average Ratio [dB]	Limit [dB]	Verdict
		Size	Offset			
QPSK	LCH	1	0	8.48	<13	PASS
		1	12	7.56	<13	PASS
		1	24	8.33	<13	PASS
		12	0	8.31	<13	PASS
		12	6	8.25	<13	PASS
		12	13	8.42	<13	PASS
		25	0	8.35	<13	PASS
	MCH	1	0	8.46	<13	PASS
		1	12	8.69	<13	PASS
		1	24	8.48	<13	PASS
		12	0	8.23	<13	PASS
		12	6	8.41	<13	PASS
		12	13	8.52	<13	PASS
		25	0	8.4	<13	PASS
	HCH	1	0	8.39	<13	PASS
		1	12	8.56	<13	PASS
		1	24	8.41	<13	PASS
		12	0	8.42	<13	PASS
		12	6	8.55	<13	PASS
		12	13	8.37	<13	PASS
		25	0	8.38	<13	PASS
16QAM	LCH	1	0	8.56	<13	PASS
		1	12	8.55	<13	PASS
		1	24	8.43	<13	PASS
		12	0	8.43	<13	PASS
		12	6	8.46	<13	PASS
		12	13	8.48	<13	PASS
		25	0	8.39	<13	PASS
	MCH	1	0	8.54	<13	PASS
		1	12	8.36	<13	PASS
		1	24	8.41	<13	PASS
		12	0	8.43	<13	PASS
		12	6	8.84	<13	PASS
		12	13	8.49	<13	PASS

The results shown in this test report refer only to the sample(s) tested unless otherwise stated and the sample(s) are retained for 30 days only. The document is issued by AGC, this document cannot be reproduced except in full with our prior written permission. The more details and the authenticity of the report will be confirmed at http://www.agc-cert.com.

		25	0	8.48	<13	PASS
	HCH	1	0	8.47	<13	PASS
		1	12	8.54	<13	PASS
		1	24	8.48	<13	PASS
		12	0	8.42	<13	PASS
		12	6	8.36	<13	PASS
		12	13	8.57	<13	PASS
		25	0	8.45	<13	PASS

Channel Bandwidth: 10 MHz

Channel Bandwidth: 10 MHz						
Modulation	Channel	RB Configuration		Peak-to-Average Ratio [dB]	Limit [dB]	Verdict
		Size	Offset			
QPSK	LCH	1	0	8.64	<13	PASS
		1	24	8.45	<13	PASS
		1	49	8.49	<13	PASS
		25	0	8.12	<13	PASS
		25	12	8.44	<13	PASS
		25	25	8.38	<13	PASS
		50	0	8.39	<13	PASS
	MCH	1	0	8.49	<13	PASS
		1	24	8.64	<13	PASS
		1	49	8.45	<13	PASS
		25	0	8.42	<13	PASS
		25	12	8.56	<13	PASS
		25	25	8.39	<13	PASS
		50	0	8.56	<13	PASS
	HCH	1	0	8.45	<13	PASS
		1	24	8.77	<13	PASS
		1	49	8.38	<13	PASS
		25	0	8.45	<13	PASS
		25	12	8.21	<13	PASS
		25	25	8.45	<13	PASS
		50	0	8.45	<13	PASS
16QAM	LCH	1	0	8.44	<13	PASS
		1	24	8.64	<13	PASS
		1	49	8.39	<13	PASS
		25	0	8.41	<13	PASS
		25	12	8.47	<13	PASS

The results shown in this test report refer only to the sample(s) tested unless otherwise stated and the sample(s) are retained for 30 days only. The document is issued by AGC, this document cannot be reproduced except in full with our prior written permission. The more details and the authenticity of the report will be confirmed at http://www.agc-cert.com.

		25	25	8.46	<13	PASS
		50	0	8.34	<13	PASS
	MCH	1	0	8.47	<13	PASS
		1	24	8.36	<13	PASS
		1	49	8.43	<13	PASS
		25	0	8.48	<13	PASS
		25	12	8.66	<13	PASS
		25	25	8.41	<13	PASS
		50	0	8.29	<13	PASS
	HCH	1	0	8.45	<13	PASS
		1	24	8.31	<13	PASS
		1	49	8.31	<13	PASS
		25	0	8.46	<13	PASS
		25	12	8.25	<13	PASS
		25	25	8.59	<13	PASS
		50	0	8.45	<13	PASS

Channel Bandwidth: 15 MHz

Channel Bandwidth: 15 MHz						
Modulation	Channel	RB Configuration		Peak-to-Average Ratio [dB]	Limit [dB]	Verdict
		Size	Offset			
QPSK	LCH	1	0	8.43	<13	PASS
		1	37	8.25	<13	PASS
		1	74	8.49	<13	PASS
		37	0	8.13	<13	PASS
		37	18	8.69	<13	PASS
		37	38	8.42	<13	PASS
		75	0	8.46	<13	PASS
	MCH	1	0	8.51	<13	PASS
		1	37	8.52	<13	PASS
		1	74	8.42	<13	PASS
		37	0	8.66	<13	PASS
		37	18	8.46	<13	PASS
		37	38	8.38	<13	PASS
		75	0	8.42	<13	PASS
	HCH	1	0	8.44	<13	PASS
		1	37	8.46	<13	PASS
		1	74	8.39	<13	PASS
		37	0	8.32	<13	PASS

The results shown in this test report refer only to the sample(s) tested unless otherwise stated and the sample(s) are retained for 30 days only. The document is issued by AGC, this document cannot be reproduced except in full with our prior written permission. The more details and the authenticity of the report will be confirmed at http://www.agc-cert.com.

		37	18	8.67	<13	PASS
		37	38	8.37	<13	PASS
		75	0	8.42	<13	PASS
16QAM	LCH	1	0	8.46	<13	PASS
		1	37	8.61	<13	PASS
		1	74	8.45	<13	PASS
		37	0	8.36	<13	PASS
		37	18	8.55	<13	PASS
		37	38	8.49	<13	PASS
		75	0	8.43	<13	PASS
	MCH	1	0	8.45	<13	PASS
		1	37	8.57	<13	PASS
		1	74	8.44	<13	PASS
		37	0	8.59	<13	PASS
		37	18	8.22	<13	PASS
		37	38	8.36	<13	PASS
		75	0	8.27	<13	PASS
	HCH	1	0	8.46	<13	PASS
		1	37	8.46	<13	PASS
		1	74	8.53	<13	PASS
		37	0	8.44	<13	PASS
		37	18	8.64	<13	PASS
		37	38	8.38	<13	PASS
		75	0	8.27	<13	PASS

Channel Bandwidth: 20 MHz

Channel Bandwidth: 20 MHz						
Modulation	Channel	RB Configuration		Peak-to-Average Ratio [dB]	Limit [dB]	Verdict
		Size	Offset			
QPSK	LCH	1	0	8.41	<13	PASS
		1	49	8.24	<13	PASS
		1	99	8.44	<13	PASS
		50	0	8.59	<13	PASS
		50	25	8.53	<13	PASS
		50	50	8.43	<13	PASS
		100	0	8.56	<13	PASS
	MCH	1	0	8.57	<13	PASS
		1	49	8.42	<13	PASS
		1	99	8.51	<13	PASS

The results shown in this test report refer only to the sample(s) tested unless otherwise stated and the sample(s) are retained for 30 days only. The document is issued by AGC, this document cannot be reproduced except in full with our prior written permission. The more details and the authenticity of the report will be confirmed at http://www.agc-cert.com.

		50	0	8.33	<13	PASS
		50	25	8.41	<13	PASS
		50	50	8.43	<13	PASS
		100	0	8.48	<13	PASS
	HCH	1	0	8.49	<13	PASS
		1	49	8.21	<13	PASS
		1	99	8.47	<13	PASS
		50	0	8.22	<13	PASS
		50	25	8.39	<13	PASS
		50	50	8.49	<13	PASS
		100	0	8.41	<13	PASS
16QAM	LCH	1	0	8.53	<13	PASS
		1	49	8.42	<13	PASS
		1	99	8.37	<13	PASS
		50	0	8.23	<13	PASS
		50	25	8.19	<13	PASS
		50	50	8.49	<13	PASS
		100	0	8.38	<13	PASS
	MCH	1	0	8.56	<13	PASS
		1	49	8.45	<13	PASS
		1	99	8.53	<13	PASS
		50	0	8.12	<13	PASS
		50	25	8.33	<13	PASS
		50	50	8.53	<13	PASS
		100	0	8.42	<13	PASS
	HCH	1	0	8.33	<13	PASS
		1	49	8.45	<13	PASS
		1	99	8.42	<13	PASS
		50	0	8.22	<13	PASS
		50	25	8.34	<13	PASS
		50	50	8.42	<13	PASS
		100	0	8.43	<13	PASS

The results shown in this test report refer only to the sample(s) tested unless otherwise stated and the sample(s) are retained for 30 days only. The document is issued by AGC, this document cannot be reproduced except in full with our prior written permission. The more details and the authenticity of the report will be confirmed at http://www.agc-cert.com.

LTE BAND 40

Channel Bandwidth: 5 MHz

Channel Bandwidth: 5 MHz						
Modulation	Channel	RB Configuration		Peak-to-Average Ratio [dB]	Limit [dB]	Verdict
		Size	Offset			
QPSK	LCH	1	0	8.44	<13	PASS
		1	12	7.99	<13	PASS
		1	24	8.45	<13	PASS
		12	0	8.11	<13	PASS
		12	6	8.43	<13	PASS
		12	13	8.37	<13	PASS
		25	0	8.39	<13	PASS
	MCH	1	0	8.51	<13	PASS
		1	12	8.25	<13	PASS
		1	24	8.41	<13	PASS
		12	0	8.52	<13	PASS
		12	6	8.46	<13	PASS
		12	13	8.53	<13	PASS
		25	0	8.36	<13	PASS
	HCH	1	0	8.37	<13	PASS
		1	12	8.55	<13	PASS
		1	24	8.51	<13	PASS
		12	0	8.45	<13	PASS
		12	6	8.43	<13	PASS
		12	13	8.26	<13	PASS
		25	0	8.49	<13	PASS
16QAM	LCH	1	0	8.51	<13	PASS
		1	12	8.46	<13	PASS
		1	24	8.45	<13	PASS
		12	0	7.89	<13	PASS
		12	6	7.99	<13	PASS
		12	13	7.52	<13	PASS
		25	0	8.42	<13	PASS
	MCH	1	0	8.49	<13	PASS
		1	12	8.45	<13	PASS
		1	24	8.43	<13	PASS
		12	0	8.33	<13	PASS
		12	6	8.47	<13	PASS
		12	13	8.35	<13	PASS

The results shown in this test report refer only to the sample(s) tested unless otherwise stated and the sample(s) are retained for 30 days only. The document is issued by AGC, this document cannot be reproduced except in full with our prior written permission. The more details and the authenticity of the report will be confirmed at http://www.agc-cert.com.

		25	0	8.46	<13	PASS
	HCH	1	0	8.56	<13	PASS
		1	12	8.33	<13	PASS
		1	24	8.37	<13	PASS
		12	0	8.42	<13	PASS
		12	6	8.69	<13	PASS
		12	13	8.44	<13	PASS
		25	0	8.41	<13	PASS

Channel Bandwidth: 10 MHz

Channel Bandwidth: 10 MHz						
Modulation	Channel	RB Configuration		Peak-to-Average Ratio [dB]	Limit [dB]	Verdict
		Size	Offset			
QPSK	LCH	1	0	8.43	<13	PASS
		1	24	8.23	<13	PASS
		1	49	8.45	<13	PASS
		25	0	8.44	<13	PASS
		25	12	8.21	<13	PASS
		25	25	8.36	<13	PASS
		50	0	8.56	<13	PASS
	MCH	1	0	8.59	<13	PASS
		1	24	8.42	<13	PASS
		1	49	8.43	<13	PASS
		25	0	8.31	<13	PASS
		25	12	8.23	<13	PASS
		25	25	8.52	<13	PASS
		50	0	8.52	<13	PASS
	HCH	1	0	8.62	<13	PASS
		1	24	8.54	<13	PASS
		1	49	8.53	<13	PASS
		25	0	8.34	<13	PASS
		25	12	8.40	<13	PASS
		25	25	8.39	<13	PASS
		50	0	8.45	<13	PASS
16QAM	LCH	1	0	8.44	<13	PASS
		1	24	8.54	<13	PASS
		1	49	8.53	<13	PASS
		25	0	8.56	<13	PASS
		25	12	8.74	<13	PASS

The results shown in this test report refer only to the sample(s) tested unless otherwise stated and the sample(s) are retained for 30 days only. The document is issued by AGC, this document cannot be reproduced except in full with our prior written permission. The more details and the authenticity of the report will be confirmed at http://www.agc-cert.com.

		25	25	8.47	<13	PASS
		50	0	8.45	<13	PASS
	MCH	1	0	8.44	<13	PASS
		1	24	8.25	<13	PASS
		1	49	8.41	<13	PASS
		25	0	8.43	<13	PASS
		25	12	8.22	<13	PASS
		25	25	8.61	<13	PASS
		50	0	8.51	<13	PASS
	HCH	1	0	8.46	<13	PASS
		1	24	8.43	<13	PASS
		1	49	8.53	<13	PASS
		25	0	8.22	<13	PASS
		25	12	8.34	<13	PASS
		25	25	8.45	<13	PASS
		50	0	8.47	<13	PASS

Channel Bandwidth: 15 MHz

Channel Bandwidth: 15 MHz						
Modulation	Channel	RB Configuration		Peak-to-Average Ratio [dB]	Limit [dB]	Verdict
		Size	Offset			
QPSK	LCH	1	0	8.51	<13	PASS
		1	37	8.42	<13	PASS
		1	74	8.47	<13	PASS
		37	0	8.33	<13	PASS
		37	18	8.43	<13	PASS
		37	38	8.53	<13	PASS
		75	0	8.39	<13	PASS
	MCH	1	0	8.43	<13	PASS
		1	37	8.19	<13	PASS
		1	74	8.44	<13	PASS
		37	0	8.39	<13	PASS
		37	18	8.27	<13	PASS
		37	38	8.43	<13	PASS
		75	0	8.58	<13	PASS
	HCH	1	0	8.48	<13	PASS
		1	37	8.44	<13	PASS
		1	74	8.39	<13	PASS
		37	0	8.35	<13	PASS

The results shown in this test report refer only to the sample(s) tested unless otherwise stated and the sample(s) are retained for 30 days only. The document is issued by AGC, this document cannot be reproduced except in full with our prior written permission. The more details and the authenticity of the report will be confirmed at http://www.agc-cert.com.

		37	18	8.51	<13	PASS
		37	38	8.53	<13	PASS
		75	0	8.48	<13	PASS
16QAM	LCH	1	0	8.42	<13	PASS
		1	37	8.57	<13	PASS
		1	74	8.48	<13	PASS
		37	0	8.79	<13	PASS
		37	18	8.45	<13	PASS
		37	38	8.44	<13	PASS
		75	0	8.36	<13	PASS
	MCH	1	0	8.54	<13	PASS
		1	37	8.56	<13	PASS
		1	74	8.53	<13	PASS
		37	0	8.40	<13	PASS
		37	18	8.32	<13	PASS
		37	38	8.55	<13	PASS
		75	0	8.55	<13	PASS
	HCH	1	0	8.43	<13	PASS
		1	37	8.57	<13	PASS
		1	74	8.53	<13	PASS
		37	0	8.41	<13	PASS
		37	18	8.24	<13	PASS
		37	38	8.44	<13	PASS
		75	0	8.34	<13	PASS

Channel Bandwidth: 20 MHz

Channel Bandwidth: 20 MHz						
Modulation	Channel	RB Configuration		Peak-to-Average Ratio [dB]	Limit [dB]	Verdict
		Size	Offset			
QPSK	LCH	1	0	8.48	<13	PASS
		1	49	8.52	<13	PASS
		1	99	8.43	<13	PASS
		50	0	8.69	<13	PASS
		50	25	8.75	<13	PASS
		50	50	8.53	<13	PASS
		100	0	8.52	<13	PASS
	MCH	1	0	8.48	<13	PASS
		1	49	8.52	<13	PASS
		1	99	8.46	<13	PASS

The results shown in this test report refer only to the sample(s) tested unless otherwise stated and the sample(s) are retained for 30 days only. The document is issued by AGC, this document cannot be reproduced except in full with our prior written permission. The more details and the authenticity of the report will be confirmed at http://www.agc-cert.com.

		50	0	8.45	<13	PASS
		50	25	8.36	<13	PASS
		50	50	8.46	<13	PASS
		100	0	8.51	<13	PASS
	HCH	1	0	8.47	<13	PASS
		1	49	8.24	<13	PASS
		1	99	8.48	<13	PASS
		50	0	8.26	<13	PASS
		50	25	8.55	<13	PASS
		50	50	8.35	<13	PASS
		100	0	8.48	<13	PASS
16QAM	LCH	1	0	8.39	<13	PASS
		1	49	8.36	<13	PASS
		1	99	8.49	<13	PASS
		50	0	8.42	<13	PASS
		50	25	8.34	<13	PASS
		50	50	8.49	<13	PASS
		100	0	8.57	<13	PASS
	MCH	1	0	8.51	<13	PASS
		1	49	8.20	<13	PASS
		1	99	8.38	<13	PASS
		50	0	8.13	<13	PASS
		50	25	8.11	<13	PASS
		50	50	8.57	<13	PASS
		100	0	8.47	<13	PASS
	HCH	1	0	8.47	<13	PASS
		1	49	8.26	<13	PASS
		1	99	8.45	<13	PASS
		50	0	8.21	<13	PASS
		50	25	8.20	<13	PASS
		50	50	8.54	<13	PASS
		100	0	8.47	<13	PASS

The results shown in this test report refer only to the sample(s) tested unless otherwise stated and the sample(s) are retained for 30 days only. The document is issued by AGC, this document cannot be reproduced except in full with our prior written permission. The more details and the authenticity of the report will be confirmed at http://www.agc-cert.com.

LTE BAND 41

Channel Bandwidth: 5 MHz

Channel Bandwidth: 5 MHz						
Modulation	Channel	RB Configuration		Peak-to-Average Ratio [dB]	Limit [dB]	Verdict
		Size	Offset			
QPSK	LCH	1	0	8.11	<13	PASS
		1	12	8.26	<13	PASS
		1	24	7.68	<13	PASS
		12	0	7.44	<13	PASS
		12	6	7.36	<13	PASS
		12	13	7.25	<13	PASS
		25	0	8.35	<13	PASS
	MCH	1	0	7.54	<13	PASS
		1	12	7.64	<13	PASS
		1	24	7.33	<13	PASS
		12	0	6.97	<13	PASS
		12	6	6.52	<13	PASS
		12	13	6.81	<13	PASS
		25	0	9.27	<13	PASS
	HCH	1	0	9.45	<13	PASS
		1	12	9.33	<13	PASS
		1	24	9.19	<13	PASS
		12	0	8.56	<13	PASS
		12	6	8.43	<13	PASS
		12	13	78.68	<13	PASS
		25	0	7.89	<13	PASS
16QAM	LCH	1	0	9.21	<13	PASS
		1	12	9.31	<13	PASS
		1	24	9.41	<13	PASS
		12	0	6.12	<13	PASS
		12	6	6.20	<13	PASS
		12	13	6.54	<13	PASS
		25	0	8.78	<13	PASS
	MCH	1	0	8.66	<13	PASS
		1	12	8.34	<13	PASS
		1	24	8.52	<13	PASS
		12	0	8.26	<13	PASS
		12	6	8.57	<13	PASS
		12	13	8.56	<13	PASS

The results shown in this test report refer only to the sample(s) tested unless otherwise stated and the sample(s) are retained for 30 days only. The document is issued by AGC, this document cannot be reproduced except in full with our prior written permission. The more details and the authenticity of the report will be confirmed at http://www.agc-cert.com.

		25	0	8.87	<13	PASS
	HCH	1	0	9.11	<13	PASS
		1	12	9.14	<13	PASS
		1	24	9.39	<13	PASS
		12	0	7.36	<13	PASS
		12	6	7.22	<13	PASS
		12	13	7.44	<13	PASS
		25	0	7.27	<13	PASS

Channel Bandwidth: 10 MHz

Channel Bandwidth: 10 MHz						
Modulation	Channel	RB Configuration		Peak-to-Average Ratio [dB]	Limit [dB]	Verdict
		Size	Offset			
QPSK	LCH	1	0	5.24	<13	PASS
		1	24	5.23	<13	PASS
		1	49	6.94	<13	PASS
		25	0	6.44	<13	PASS
		25	12	6.37	<13	PASS
		25	25	8.37	<13	PASS
		50	0	8.16	<13	PASS
	MCH	1	0	6.86	<13	PASS
		1	24	7.41	<13	PASS
		1	49	7.36	<13	PASS
		25	0	7.25	<13	PASS
		25	12	7.28	<13	PASS
		25	25	6.37	<13	PASS
		50	0	6.34	<13	PASS
	HCH	1	0	6.82	<13	PASS
		1	24	6.89	<13	PASS
		1	49	7.81	<13	PASS
		25	0	7.44	<13	PASS
		25	12	7.36	<13	PASS
		25	25	7.84	<13	PASS
		50	0	7.57	<13	PASS
16QAM	LCH	1	0	7.41	<13	PASS
		1	24	7.66	<13	PASS
		1	49	8.25	<13	PASS
		25	0	8.11	<13	PASS
		25	12	8.36	<13	PASS

The results shown in this test report refer only to the sample(s) tested unless otherwise stated and the sample(s) are retained for 30 days only. The document is issued by AGC, this document cannot be reproduced except in full with our prior written permission. The more details and the authenticity of the report will be confirmed at http://www.agc-cert.com.

		25	25	7.88	<13	PASS
		50	0	8.34	<13	PASS
	MCH	1	0	9.23	<13	PASS
		1	24	8.56	<13	PASS
		1	49	8.36	<13	PASS
		25	0	8.46	<13	PASS
		25	12	8.39	<13	PASS
		25	25	8.43	<13	PASS
		50	0	7.51	<13	PASS
	HCH	1	0	8.97	<13	PASS
		1	24	8.63	<13	PASS
		1	49	8.33	<13	PASS
		25	0	7.36	<13	PASS
		25	12	7.34	<13	PASS
		25	25	7.42	<13	PASS
		50	0	7.45	<13	PASS

Channel Bandwidth: 15 MHz

Channel Bandwidth: 15 MHz						
Modulation	Channel	RB Configuration		Peak-to-Average Ratio [dB]	Limit [dB]	Verdict
		Size	Offset			
QPSK	LCH	1	0	8.16	<13	PASS
		1	37	7.56	<13	PASS
		1	74	7.66	<13	PASS
		37	0	8.12	<13	PASS
		37	18	8.23	<13	PASS
		37	38	3.52	<13	PASS
		75	0	8.74	<13	PASS
	MCH	1	0	7.73	<13	PASS
		1	37	7.45	<13	PASS
		1	74	6.62	<13	PASS
		37	0	6.37	<13	PASS
		37	18	6.48	<13	PASS
		37	38	7.85	<13	PASS
		75	0	7.56	<13	PASS
	HCH	1	0	7.16	<13	PASS
		1	37	7.52	<13	PASS
		1	74	9.58	<13	PASS
		37	0	8.52	<13	PASS

The results shown in this test report refer only to the sample(s) tested unless otherwise stated and the sample(s) are retained for 30 days only. The document is issued by AGC, this document cannot be reproduced except in full with our prior written permission. The more details and the authenticity of the report will be confirmed at http://www.agc-cert.com.

		37	18	8.35	<13	PASS
		37	38	8.29	<13	PASS
		75	0	8.64	<13	PASS
16QAM	LCH	1	0	7.81	<13	PASS
		1	37	7.56	<13	PASS
		1	74	7.65	<13	PASS
		37	0	8.02	<13	PASS
		37	18	8.31	<13	PASS
		37	38	8.16	<13	PASS
		75	0	8.39	<13	PASS
	MCH	1	0	8.35	<13	PASS
		1	37	8.41	<13	PASS
		1	74	7.59	<13	PASS
		37	0	7.52	<13	PASS
		37	18	7.46	<13	PASS
		37	38	8.53	<13	PASS
		75	0	8.46	<13	PASS
	HCH	1	0	8.46	<13	PASS
		1	37	8.58	<13	PASS
		1	74	7.16	<13	PASS
		37	0	7.26	<13	PASS
		37	18	7.64	<13	PASS
		37	38	7.65	<13	PASS
		75	0	9.39	<13	PASS

Channel Bandwidth: 20 MHz

Channel Bandwidth: 20 MHz						
Modulation	Channel	RB Configuration		Peak-to-Average Ratio [dB]	Limit [dB]	Verdict
		Size	Offset			
QPSK	LCH	1	0	9.71	<13	PASS
		1	49	9.11	<13	PASS
		1	99	8.57	<13	PASS
		50	0	8.43	<13	PASS
		50	25	8.33	<13	PASS
		50	50	8.27	<13	PASS
		100	0	6.96	<13	PASS
	MCH	1	0	7.46	<13	PASS
		1	49	7.13	<13	PASS
		1	99	7.75	<13	PASS

The results shown in this test report refer only to the sample(s) tested unless otherwise stated and the sample(s) are retained for 30 days only. The document is issued by AGC, this document cannot be reproduced except in full with our prior written permission. The more details and the authenticity of the report will be confirmed at http://www.agc-cert.com.

		50	0	8.33	<13	PASS
		50	25	8.74	<13	PASS
		50	50	7.83	<13	PASS
		100	0	7.76	<13	PASS
	HCH	1	0	8.59	<13	PASS
		1	49	8.11	<13	PASS
		1	99	8.83	<13	PASS
		50	0	7.31	<13	PASS
		50	25	7.36	<13	PASS
		50	50	7.37	<13	PASS
		100	0	8.55	<13	PASS
16QAM	LCH	1	0	7.61	<13	PASS
		1	49	8.56	<13	PASS
		1	99	6.96	<13	PASS
		50	0	7.55	<13	PASS
		50	25	7.96	<13	PASS
		50	50	7.53	<13	PASS
		100	0	9.11	<13	PASS
	MCH	1	0	8.88	<13	PASS
		1	49	8.43	<13	PASS
		1	99	8.46	<13	PASS
		50	0	8.89	<13	PASS
		50	25	8.74	<13	PASS
		50	50	8.31	<13	PASS
		100	0	6.83	<13	PASS
	HCH	1	0	6.63	<13	PASS
		1	49	6.89	<13	PASS
		1	99	7.14	<13	PASS
		50	0	8.96	<13	PASS
		50	25	8.75	<13	PASS
		50	50	8.38	<13	PASS
		100	0	8.39	<13	PASS

The results shown in this test report refer only to the sample(s) tested unless otherwise stated and the sample(s) are retained for 30 days only. The document is issued by AGC, this document cannot be reproduced except in full with our prior written permission. The more details and the authenticity of the report will be confirmed at http://www.agc-cert.com.

7. SPURIOUS EMISSION

7.1 CONDUCTED SPURIOUS EMISSION

7.1.1 MEASUREMENT METHOD

The level of the carrier and the various conducted spurious and harmonic frequencies is measured by means of a calibrated spectrum analyzer. The spectrum is scanned from the lowest frequency generated in the equipment up to a frequency including its 10th harmonic. All out of band emissions are measured with a spectrum analyzer connected to the antenna terminal of the EUT while the EUT is operating at its maximum duty cycle, at maximum power, and at the appropriate frequencies. All data rates were investigated to determine the worst case configuration. All modes of operation were investigated and the worst case configuration results are reported in this section.

The minimum permissible attenuation level of any spurious emission is 43 + log10(P[Watts]), where P is the transmitter power in Watts.

Test Procedure Used

KDB 971168 D01v03 – Section 6.0

Test Settings

1. Start frequency was set to 30MHz and stop frequency was set to at least 10 * the fundamental frequency (separated into at least two plots per channel)
2. Detector = RMS
3. Trace mode = max hold
4. Sweep time = auto couple
5. The trace was allowed to stabilize
6. Please see test notes below for RBW and VBW settings

Test Setup

The EUT and measurement equipment were set up as shown in the diagram below.

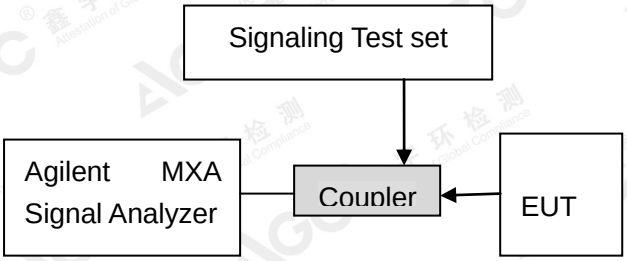

Test Instrument & Measurement Setup

shall be attenuated below the transmitter power (P, in Watts) by at least 43+10Log(P) dB. For all power levels +30 dBm to 0 dBm, this becomes a constant specification limit of -13 dBm.

The results shown in this test report refer only to the sample(s) tested unless otherwise stated and the sample(s) are retained for 30 days only. The document is issued by AGC, this document cannot be reproduced except in full with our prior written permission. The more details and the authenticity of the report will be confirmed at http://www.agc-cert.com.

Test Note

Compliance with the applicable limits is based on the use of measurement instrumentation employing a resolution bandwidth of 100 kHz or greater for frequencies less than 1 GHz and 1 MHz or greater for frequencies greater than 1 GHz. However, in the 1 MHz bands immediately outside and adjacent to the frequency block a resolution bandwidth of at least one percent of the emission bandwidth of the fundamental emission of the transmitter may be employed. The emission bandwidth is defined as the width of the signal between two points, one below the carrier center frequency and one above the carrier center frequency, outside of which all emission are attenuated at least 26 dB below the transmitter power.

7.1.2 MEASUREMENT RESULT

PLEASE REFER TO: APPENDIX A TEST PLOTS FOR CONDUCTED SPURIOUS EMISSION

Note: 1. No emission found in standby or receive mode, no recording in this report.

The results shown in this test report refer only to the sample(s) tested unless otherwise stated and the sample(s) are retained for 30 days only. The document is issued by AGC, this document cannot be reproduced except in full with our prior written permission. The more details and the authenticity of the report will be confirmed at http://www.agc-cert.com.

7.2 RADIATED SPURIOUS EMISSION

7.2.1. MEASUREMENT PROCEDURE

1. The EUT was placed on the top of the turntable 0.8 or 1.5 meter above ground. The phase center of the receiving antenna mounted on the top of a height-variable antenna tower was placed 3 meters far away from the turntable.
2. Power on the EUT and all the supporting units. The turntable was rotated by 360 degrees to determine the position of the highest radiation.
3. The height of the broadband receiving antenna was varied between one meter and four meters above ground to find the maximum emissions field strength of both horizontal and vertical polarization.
4. For each suspected emissions, the antenna tower was scan (from 1 M to 4 M) and then the turntable was rotated (from 0 degree to 360 degrees) to find the maximum reading.
5. Set the test-receiver system to Peak or CISPR quasi-peak Detect Function with specified bandwidth under Maximum Hold Mode.
6. For emissions above 1GHz, use 1MHz VBW and RBW for peak reading. Then 1MHz RBW and 10Hz VBW for average reading in spectrum analyzer. Place the measurement antenna away from each area of the EUT determined to be a source of emissions at the specified measurement distance, while keeping the measurement antenna aimed at the source of emissions at each frequency of significant emissions, with polarization oriented for maximum response. The measurement antenna may have to be higher or lower than the EUT, depending on the radiation pattern of the emission and staying aimed at the emission source for receiving the maximum signal. The final measurement antenna elevation shall be that which maximizes the emissions. The measurement antenna elevation for maximum emissions shall be restricted to a range of heights of from 1 m to 4 m above the ground or reference ground plane.
7. When the radiated emissions limits are expressed in terms of the average value of the emissions, and pulsed operation is employed, the measurement field strength shall be determined by averaging over one complete pulse train, including blanking intervals, as long as the pulse train does not exceed 0.1 seconds. As an alternative (provided the transmitter operates for longer than 0.1 seconds) or in cases where the pulse train exceeds 0.1 seconds, the measured field strength shall be determined from the average absolute voltage during a 0.1 second interval during which the field strength is at its maximum values.
8. If the emissions level of the EUT in peak mode was 3 dB lower than the average limit specified, then testing will be stopped and peak values of EUT will be reported, otherwise, the emissions which do not have 3 dB margin will be repeated one by one using the quasi-peak method for below 1GHz.
9. For testing above 1GHz, the emissions level of the EUT in peak mode was lower than average limit (that means the emissions level in peak mode also complies with the limit in average mode), then testing will be stopped and peak values of EUT will be reported, otherwise, the emissions will be measured in average mode again and reported.
10. In case the emission is lower than 30MHz, loop antenna has to be used for measurement and the recorded data should be QP measured by receiver. High - Low scan is not required in this case.

The results shown in this test report refer only to the sample(s) tested unless otherwise stated and the sample(s) are retained for 30 days only. The document is issued by AGC, this document cannot be reproduced except in full with our prior written permission. The more details and the authenticity of the report will be confirmed at http://www.agc-cert.com.

7.2.2. TEST SETUP

Radiated Emission Test-Setup Frequency Below 30MHz

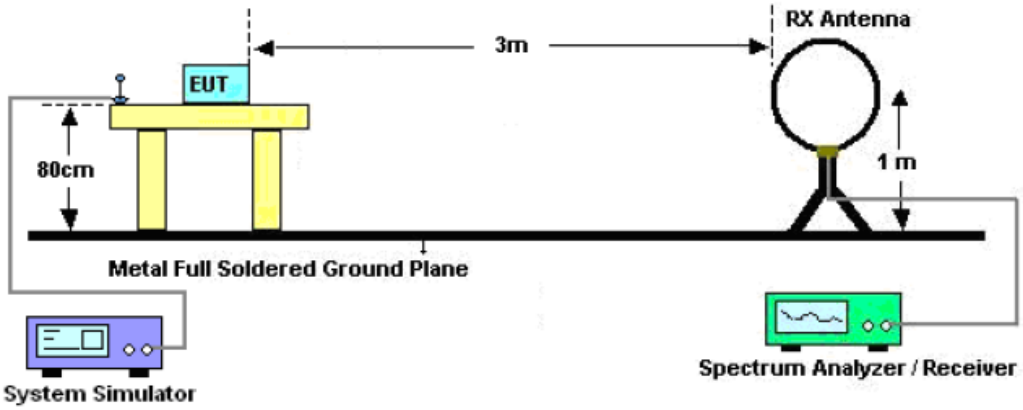

RADIATED EMISSION TEST SETUP 30MHz-1000MHz

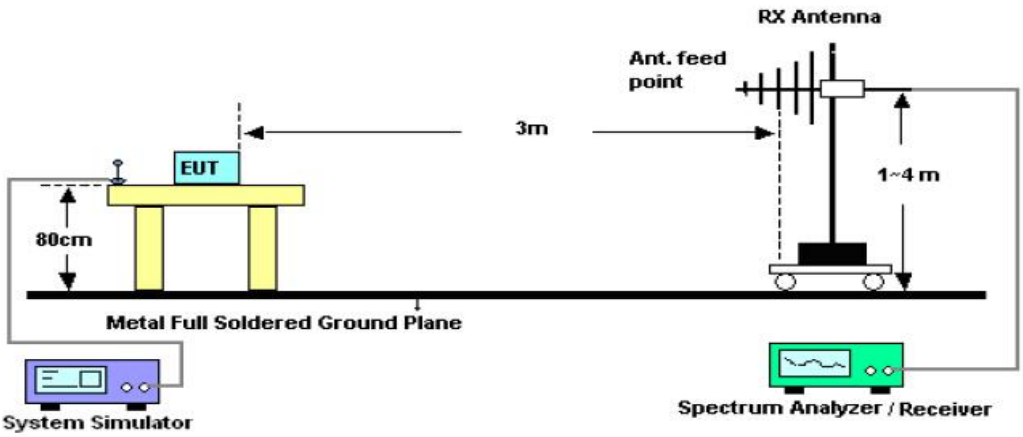

RADIATED EMISSION TEST SETUP ABOVE 1000MHz

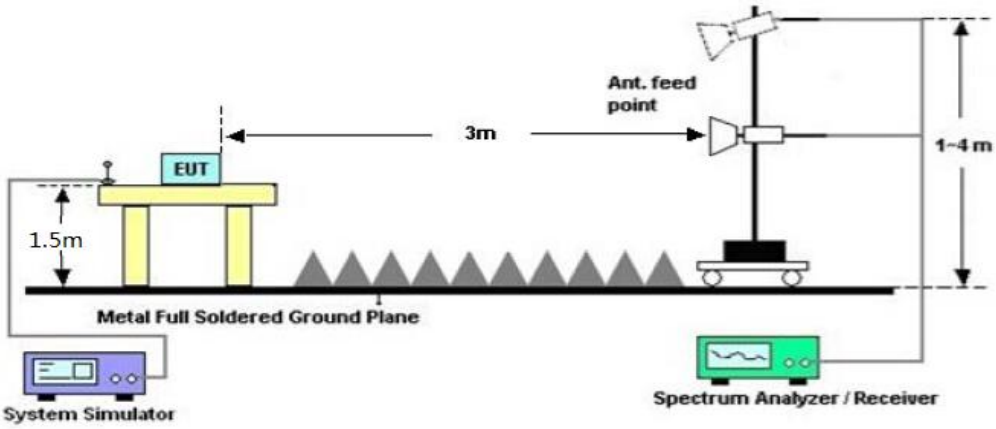

The results shown in this test report refer only to the sample(s) tested unless otherwise stated and the sample(s) are retained for 30 days only. The document is issued by AGC, this document cannot be reproduced except in full with our prior written permission. The more details and the authenticity of the report will be confirmed at http://www.agc-cert.com.

7.2.3 PROVISIONS APPLICABLE

(a) On any frequency outside a licensee's frequency block (e.g. A, D, B, etc.) within the USPCS spectrum, the power of any emission shall be attenuated below the transmitter power (P, in Watts) by at least 43+10Log(P) dB. The specification that emissions shall be attenuated below the transmitter power (P) by at least 43 + 10 log (P) dB, translates in the relevant power range (1 to 0.001 W) to -13 dBm. At 1 W the specified minimum attenuation becomes 43 dB and relative to a 30 dBm (1 W) carrier becomes a limit of -13 dBm. At 0.001 W (0 dBm) the minimum attenuation is 13 dB, which again yields a limit of -13 dBm. In this way a translation of the specification from relative to absolute terms is carried out.

Note: Only record the worst condition of each test mode:

The results shown in this test report refer only to the sample(s) tested unless otherwise stated and the sample(s) are retained for 30 days only. The document is issued by AGC, this document cannot be reproduced except in full with our prior written permission. The more details and the authenticity of the report will be confirmed at http://www.agc-cert.com.

7.2.4 MEASUREMENT RESULT

LTE Band 7

Low channel

Frequency (MHz)	Polarity (H/V)	Emission Level (dBm)	Limit (dBm)	Margin (dB)
3440	V	-36.61	-13	-23.61
874.61	V	-41.67	-13	-28.67
759.13	V	-44.64	-13	-31.64
3440	H	-35.59	-13	-22.59
549.66	H	-41.59	-13	-28.59
447.03	H	-42.39	-13	-29.39

Middle channel

Frequency (MHz)	Polarity (H/V)	Emission Level (dBm)	Limit (dBm)	Margin (dB)
3465	V	-36.37	-13	-23.37
561.33	V	-42.38	-13	-29.38
436.16	V	-43.72	-13	-30.72
3465	H	-35.79	-13	-22.79
343.66	H	-41.75	-13	-28.75
289.44	H	-42.31	-13	-29.31

High channel

Frequency (MHz)	Polarity (H/V)	Emission Level (dBm)	Limit (dBm)	Margin (dB)
3490	V	-35.75	-13	-22.75
536.33	V	-42.70	-13	-29.70
444.70	V	-43.41	-13	-30.41
3490	H	-36.99	-13	-23.99
318.59	H	-41.34	-13	-28.34
287.16	H	-42.58	-13	-29.58

The results shown in this test report refer only to the sample(s) tested unless otherwise stated and the sample(s) are retained for 30 days only. The document is issued by AGC, this document cannot be reproduced except in full with our prior written permission. The more details and the authenticity of the report will be confirmed at http://www.agc-cert.com.

LTE Band 17

Low channel

Frequency (MHz)	Polarity (H/V)	Emission Level (dBm)	Limit (dBm)	Margin (dB)
1418	V	-37.03	-13	-24.03
856.54	V	-41.69	-13	-28.69
756.33	V	-43.62	-13	-30.62
1418	H	-35.83	-13	-22.83
455.62	H	-41.96	-13	-28.96
334.23	H	-43.70	-13	-30.70

Middle channel

Frequency (MHz)	Polarity (H/V)	Emission Level (dBm)	Limit (dBm)	Margin (dB)
1420	V	-35.76	-13	-22.76
563.12	V	-42.37	-13	-29.37
335.19	V	-42.87	-13	-29.87
1420	H	-36.69	-13	-23.69
456.31	H	-42.75	-13	-29.75
359.49	H	-42.70	-13	-29.70

High channel

Frequency (MHz)	Polarity (H/V)	Emission Level (dBm)	Limit (dBm)	Margin (dB)
1422	V	-36.30	-13	-23.30
565.69	V	-41.52	-13	-28.52
453.16	V	-42.78	-13	-29.78
1422	H	-37.17	-13	-24.17
451.28	H	-41.76	-13	-28.76
339.54	H	-43.69	-13	-30.69

The results shown in this test report refer only to the sample(s) tested unless otherwise stated and the sample(s) are retained for 30 days only. The document is issued by AGC, this document cannot be reproduced except in full with our prior written permission. The more details and the authenticity of the report will be confirmed at http://www.agc-cert.com.

LTE Band 38

Low channel

Frequency (MHz)	Polarity (H/V)	Emission Level (dBm)	Limit (dBm)	Margin (dB)
5160	V	-35.83	-13	-22.83
856.47	V	-42.52	-13	-29.52
648.54	V	-42.52	-13	-29.52
5160	H	-37.10	-13	-24.10
778.56	H	-41.94	-13	-28.94
678.45	H	-43.29	-13	-30.29

Middle channel

Frequency (MHz)	Polarity (H/V)	Emission Level (dBm)	Limit (dBm)	Margin (dB)
5190	V	-36.21	-13	-23.21
586.45	V	-41.83	-13	-28.83
476.48	V	-43.15	-13	-30.15
5190	H	-36.63	-13	-23.63
693.41	H	-41.97	-13	-28.97
546.46	H	-43.72	-13	-30.72

High channel

Frequency (MHz)	Polarity (H/V)	Emission Level (dBm)	Limit (dBm)	Margin (dB)
5220	V	-36.51	-13	-23.51
656.74	V	-42.65	-13	-29.65
565.94	V	-42.88	-13	-29.88
5220	H	-36.95	-13	-23.95
695.33	H	-41.40	-13	-28.40
546.15	H	-42.58	-13	-29.58

The results shown in this test report refer only to the sample(s) tested unless otherwise stated and the sample(s) are retained for 30 days only. The document is issued by AGC, this document cannot be reproduced except in full with our prior written permission. The more details and the authenticity of the report will be confirmed at http://www.agc-cert.com.

LTE Band 40

Low channel

Frequency (MHz)	Polarity (H/V)	Emission Level (dBm)	Limit (dBm)	Margin (dB)
4620	V	-36.81	-13	-23.81
569.66	V	-42.68	-13	-29.68
486.74	V	-43.28	-13	-30.28
4620	H	-36.73	-13	-23.73
456.58	H	-42.67	-13	-29.67
394.12	H	-43.33	-13	-30.33

Middle channel

Frequency (MHz)	Polarity (H/V)	Emission Level (dBm)	Limit (dBm)	Margin (dB)
4700	V	-37.07	-13	-24.07
584.16	V	-42.47	-13	-29.47
444.73	V	-43.06	-13	-30.06
4700	H	-36.87	-13	-23.87
463.66	H	-41.55	-13	-28.55
386.42	H	-43.04	-13	-30.04

High channel

Frequency (MHz)	Polarity (H/V)	Emission Level (dBm)	Limit (dBm)	Margin (dB)
4780	V	-36.74	-13	-24.01
453.61	V	-42.13	-13	-29.23
389.42	V	-42.65	-13	-29.50
4780	H	-36.10	-13	-22.86
369.55	H	-42.60	-13	-28.38
289.45	H	-43.11	-13	-29.90

The results shown in this test report refer only to the sample(s) tested unless otherwise stated and the sample(s) are retained for 30 days only. The document is issued by AGC, this document cannot be reproduced except in full with our prior written permission. The more details and the authenticity of the report will be confirmed at http://www.agc-cert.com.

LTE Band 41

Low channel

Frequency (MHz)	Polarity (H/V)	Emission Level (dBm)	Limit (dBm)	Margin (dB)
5012	V	-36.65	-13	-23.65
869.45	V	-41.58	-13	-28.58
776.13	V	-43.13	-13	-30.13
5012	H	-36.75	-13	-23.75
695.45	H	-42.73	-13	-29.73
589.47	H	-42.54	-13	-29.54

Middle channel

Frequency (MHz)	Polarity (H/V)	Emission Level (dBm)	Limit (dBm)	Margin (dB)
5186	V	-36.70	-13	-23.52
758.69	V	-42.61	-13	-29.39
569.47	V	-42.80	-13	-29.70
5186	H	-37.12	-13	-23.43
693.44	H	-42.04	-13	-28.43
584.75	H	-43.03	-13	-29.57

High channel

Frequency (MHz)	Polarity (H/V)	Emission Level (dBm)	Limit (dBm)	Margin (dB)
5360	V	-35.98	-13	-22.97
694.11	V	-42.16	-13	-28.41
586.47	V	-42.33	-13	-29.92
5360	H	-35.85	-13	-23.62
586.41	H	-42.44	-13	-28.92
463.11	H	-43.56	-13	-29.95

Note: 1. Margin = Emission Level -Limit

2. (30MHz-26GHz) Below 30MHZ no Spurious found and above is the worst mode data.

The results shown in this test report refer only to the sample(s) tested unless otherwise stated and the sample(s) are retained for 30 days only. The document is issued by AGC, this document cannot be reproduced except in full with our prior written permission. The more details and the authenticity of the report will be confirmed at http://www.agc-cert.com.

8. FREQUENCY STABILITY

8.1 MEASUREMENT METHOD

In order to measure the carrier frequency under the condition of AFC lock, it is necessary to make measurements with the EUT in a “call mode”. This is accomplished with the use of R&S CMW500 DIGITAL RADIO COMMUNICATION TESTER.

1 Measure the carrier frequency at room temperature.

2 Subject the EUT to overnight soak at -10℃. With the EUT, powered via nominal voltage, connected to the CMW500 and in a simulated call on channel 20175 for LTE band 4 measure the carrier frequency. These measurements should be made within 2 minutes of Powering up the EUT, to prevent significant self-warming.

3 Repeat the above measurements at 10℃ increments from -10℃ to +50℃. Allow at least 1 1/2 hours at each temperature, unpowered, before making measurements.

4 Re-measure carrier frequency at room temperature with nominal voltage. Vary supply voltage from minimum voltage to maximum voltage, in 0.1Volt increments re-measuring carrier frequency at each voltage. Pause at nominal voltage for 1 1/2 hours unpowered, to allow any self-heating to stabilize, before continuing.

5 Subject the EUT to overnight soak at +50℃.

6 With the EUT, powered via nominal voltage, connected to the CMW500 and in a simulated call on the centre channel, measure the carrier frequency. These measurements should be made within 2 minutes of Powering up the EUT, to prevent significant self-warming.

7 Repeat the above measurements at 10℃ increments from +50℃ to -10℃. Allow at least 1 1/2 hours at each temperature, unpowered, before making measurements.

8 At all temperature levels hold the temperature to +/- 0.5℃ during the measurement procedure.

The results shown in this test report refer only to the sample(s) tested unless otherwise stated and the sample(s) are retained for 30 days only. The document is issued by AGC, this document cannot be reproduced except in full with our prior written permission. The more details and the authenticity of the report will be confirmed at http://www.agc-cert.com.

8.2 PROVISIONS APPLICABLE

8.2.1 For Hand carried battery powered equipment

Frequency stability testing is performed in accordance with the guidelines of ANSI/TIA-603-E-2016. The frequency stability of the transmitter is measured by:

a.) Temperature: The temperature is varied from -30°C to +50°C in 10°C increments using an environmental chamber.

b.) Primary Supply Voltage: The primary supply voltage is varied from 85% to 115% of the nominal value for non hand-carried battery and AC powered equipment. For hand-carried, battery-powered equipment, primary supply voltage is reduced to the battery operating end point which shall be specified by the manufacturer.

For Part 22, the frequency stability of the transmitter shall be maintained within ±0.00025% (±2.5 ppm) of the center frequency. For Part 24 and Part 27, the frequency stability shall be sufficient to ensure that the fundamental emission stays within the authorized frequency block.

8.2.2 For equipment powered by primary supply voltage

1. The carrier frequency of the transmitter is measured at room temperature (20°C to provide a reference).
2. The equipment is turned on in a “standby” condition for fifteen minutes before applying power to the transmitter. Measurement of the carrier frequency of the transmitter is made within one minute after applying power to the transmitter.
3. Frequency measurements are made at 10°C intervals ranging from -30°C to +50°C. A period of at least one half-hour is provided to allow stabilization of the equipment at each temperature level.

The results shown in this test report refer only to the sample(s) tested unless otherwise stated and the sample(s) are retained for 30 days only. The document is issued by AGC, this document cannot be reproduced except in full with our prior written permission. The more details and the authenticity of the report will be confirmed at http://www.agc-cert.com.

8.3 MEASUREMENT RESULT (WORST)

LTE Band 7

Middle Channel, f_O = 2535 MHz				
Temperature (℃)	Power Supplied (VDC)	Frequency Error (Hz)	Frequency Error (ppm)	Limit (ppm)
-10	3.7	-4.53	-0.001812	±2.5
0		-2.20	-0.000880	±2.5
10		-3.69	-0.001475	±2.5
20		-1.06	-0.000423	±2.5
30		-4.52	-0.001783	±2.5
40		-3.55	-0.001382	±2.5
50		-2.19	-0.000875	±2.5
25	4.2	-7.60	-0.003035	±2.5
	3.5	-5.21	-0.002081	±2.5

.

LTE Band 17

Middle Channel, f_O = 710MHz				
Temperature (℃)	Power Supplied (VDC)	Frequency Error (Hz)	Frequency Error (ppm)	Limit (ppm)
-10	3.7	-4.39	-0.006216	±2.5
0		-4.79	-0.006783	±2.5
10		-4.91	-0.006945	±2.5
20		-3.81	-0.005386	±2.5
30		-3.02	-0.004251	±2.5
40		-9.47	-0.013338	±2.5
50		-6.72	-0.009470	±2.5
25	4.2	-5.06	-0.007097	±2.5
	3.5	-4.22	-0.005915	±2.5

The results shown in this test report refer only to the sample(s) tested unless otherwise stated and the sample(s) are retained for 30 days only. The document is issued by AGC, this document cannot be reproduced except in full with our prior written permission. The more details and the authenticity of the report will be confirmed at http://www.agc-cert.com.

LTE Band 38

Middle Channel, fo = 2595MHz				
Temperature (℃)	Power Supplied (VDC)	Frequency Error (Hz)	Frequency Error (ppm)	Limit (ppm)
-10	3.7	-2.79	-0.001084	±2.5
0		-5.06	-0.001969	±2.5
10		-1.96	-0.000762	±2.5
20		-2.53	-0.000976	±2.5
30		-6.18	-0.002381	±2.5
40		-7.47	-0.002853	±2.5
50		-6.02	-0.002301	±2.5
25	4.2	-5.74	-0.002230	±2.5
	3.5	-2.16	-0.000840	±2.5

LTE Band 40

Middle Channel, fo = 2350MHz				
Temperature (℃)	Power Supplied (VDC)	Frequency Error (Hz)	Frequency Error (ppm)	Limit (ppm)
-10	3.7	-9.76	-0.004237	±2.5
0		-9.60	-0.004169	±2.5
10		-8.93	-0.003877	±2.5
20		-9.74	-0.004145	±2.5
30		-10.96	-0.004663	±2.5
40		-7.08	-0.002954	±2.5
50		-6.32	-0.002637	±2.5
25	4.2	-6.38	-0.002771	±2.5
	3.5	-5.05	-0.002193	±2.5

The results shown in this test report refer only to the sample(s) tested unless otherwise stated and the sample(s) are retained for 30 days only. The document is issued by AGC, this document cannot be reproduced except in full with our prior written permission. The more details and the authenticity of the report will be confirmed at http://www.agc-cert.com.

LTE Band 41

Middle Channel, f_0 = 2593 MHz				
Temperature (℃)	Power Supplied (VDC)	Frequency Error (Hz)	Frequency Error (ppm)	Limit (ppm)
-10	3.7	-8.74	-0.003333	±2.5
0		-7.97	-0.003079	±2.5
10		-9.86	-0.003809	±2.5
20		-6.18	-0.002383	±2.5
30		-9.53	-0.003674	±2.5
40		-7.67	-0.002957	±2.5
50		-8.63	-0.003334	±2.5
25	4.2	-1.17	-0.000447	±2.5
	3.5	-7.52	-0.002908	±2.5

Note: The EUT doesn't work below -10℃

The results shown in this test report refer only to the sample(s) tested unless otherwise stated and the sample(s) are retained for 30 days only. The document is issued by AGC, this document cannot be reproduced except in full with our prior written permission. The more details and the authenticity of the report will be confirmed at http://www.agc-cert.com.

9. OCCUPIED BANDWIDTH

9.1 MEASUREMENT METHOD

The test set up and general procedure is similar to conducted peak output power test. Only different for setting the measurement configuration of the measuring instrument of Spectrum Analyzer.

9.2 PROVISIONS APPLICABLE

The emission bandwidth is defined as two points, one below the carrier center frequency and one above the carrier center frequency, outside of which all emissions are attenuated at least 26dB below the transmitter power

9.3 MEASUREMENT RESULT

The occupied bandwidth, that is the frequency bandwidth such that, below its lower and above its upper frequency limits, the mean powers radiated are each equal to 0.5 percent of the total mean power radiated by a given emission shall be measured. All modes of operation were investigated and the worst case configuration results are reported in this section.

The results shown in this test report refer only to the sample(s) tested unless otherwise stated and the sample(s) are retained for 30 days only. The document is issued by AGC, this document cannot be reproduced except in full with our prior written permission. The more details and the authenticity of the report will be confirmed at http://www.agc-cert.com.

LTE Band 7

Channel Bandwidth: 5MHz

Channel Bandwidth: 5 MHz					
Modulation	Channel	RB Configuration		Occupied Bandwidth(MHz)	Verdict
		Size	Offset		
QPSK	LCH	25	0	4.4819	PASS
	MCH	25	0	4.4747	PASS
	HCH	25	0	4.4823	PASS
16QAM	LCH	25	0	4.4776	PASS
	MCH	25	0	4.4804	PASS
	HCH	25	0	4.4748	PASS

Channel Bandwidth: 10 MHz

Channel Bandwidth: 10 MHz					
Modulation	Channel	RB Configuration		Occupied Bandwidth (MHz)	Verdict
		Size	Offset		
QPSK	LCH	50	0	8.9451	PASS
	MCH	50	0	8.9426	PASS
	HCH	50	0	8.9402	PASS
16QAM	LCH	50	0	8.9490	PASS
	MCH	50	0	8.9492	PASS
	HCH	50	0	8.9568	PASS

The results shown in this test report refer only to the sample(s) tested unless otherwise stated and the sample(s) are retained for 30 days only. The document is issued by AGC, this document cannot be reproduced except in full with our prior written permission. The more details and the authenticity of the report will be confirmed at http://www.agc-cert.com.

Channel Bandwidth: 15 MHz

Channel Bandwidth: 15 MHz					
Modulation	Channel	RB Configuration		Occupied Bandwidth (MHz)	Verdict
		Size	Offset		
QPSK	LCH	75	0	13.405	PASS
	MCH	75	0	13.408	PASS
	HCH	75	0	13.401	PASS
16QAM	LCH	75	0	13.397	PASS
	MCH	75	0	13.420	PASS
	HCH	75	0	13.411	PASS

Channel Bandwidth: 20 MHz

Channel Bandwidth: 20 MHz					
Modulation	Channel	RB Configuration		Occupied Bandwidth (MHz)	Verdict
		Size	Offset		
QPSK	LCH	100	0	17.870	PASS
	MCH	100	0	17.888	PASS
	HCH	100	0	17.867	PASS
16QAM	LCH	100	0	17.873	PASS
	MCH	100	0	17.882	PASS
	HCH	100	0	17.863	PASS

The results shown in this test report refer only to the sample(s) tested unless otherwise stated and the sample(s) are retained for 30 days only. The document is issued by AGC, this document cannot be reproduced except in full with our prior written permission. The more details and the authenticity of the report will be confirmed at http://www.agc-cert.com.

LTE Band 17

Channel Bandwidth: 5MHz

Channel Bandwidth: 5 MHz					
Modulation	Channel	RB Configuration		Occupied Bandwidth(MHz)	Verdict
		Size	Offset		
QPSK	LCH	25	0	4.4830	PASS
	MCH	25	0	4.4797	PASS
	HCH	25	0	4.4797	PASS
16QAM	LCH	25	0	4.4782	PASS
	MCH	25	0	4.4849	PASS
	HCH	25	0	4.4804	PASS

Channel Bandwidth: 10 MHz

Channel Bandwidth: 10 MHz					
Modulation	Channel	RB Configuration		Occupied Bandwidth (MHz)	Verdict
		Size	Offset		
QPSK	LCH	50	0	8.9432	PASS
	MCH	50	0	8.9354	PASS
	HCH	50	0	8.9274	PASS
16QAM	LCH	50	0	8.9397	PASS
	MCH	50	0	8.9334	PASS
	HCH	50	0	8.9421	PASS

The results shown in this test report refer only to the sample(s) tested unless otherwise stated and the sample(s) are retained for 30 days only. The document is issued by AGC, this document cannot be reproduced except in full with our prior written permission. The more details and the authenticity of the report will be confirmed at http://www.agc-cert.com.

LTE Band 38

Channel Bandwidth: 5MHz

Channel Bandwidth: 5 MHz					
Modulation	Channel	RB Configuration		Occupied Bandwidth(MHz)	Verdict
		Size	Offset		
QPSK	LCH	25	0	4.4738	PASS
	MCH	25	0	4.4590	PASS
	HCH	25	0	4.4661	PASS
16QAM	LCH	25	0	4.4649	PASS
	MCH	25	0	4.4811	PASS
	HCH	25	0	4.4621	PASS

Channel Bandwidth: 10 MHz

Channel Bandwidth: 10 MHz					
Modulation	Channel	RB Configuration		Occupied Bandwidth (MHz)	Verdict
		Size	Offset		
QPSK	LCH	50	0	8.9146	PASS
	MCH	50	0	8.9224	PASS
	HCH	50	0	8.9400	PASS
16QAM	LCH	50	0	8.9336	PASS
	MCH	50	0	8.9331	PASS
	HCH	50	0	8.9461	PASS

The results shown in this test report refer only to the sample(s) tested unless otherwise stated and the sample(s) are retained for 30 days only. The document is issued by AGC, this document cannot be reproduced except in full with our prior written permission. The more details and the authenticity of the report will be confirmed at http://www.agc-cert.com.

Channel Bandwidth: 15 MHz

Channel Bandwidth: 15 MHz					
Modulation	Channel	RB Configuration		Occupied Bandwidth (MHz)	Verdict
		Size	Offset		
QPSK	LCH	75	0	13.376	PASS
	MCH	75	0	13.380	PASS
	HCH	75	0	13.374	PASS
16QAM	LCH	75	0	13.386	PASS
	MCH	75	0	13.389	PASS
	HCH	75	0	13.403	PASS

Channel Bandwidth: 20 MHz

Channel Bandwidth: 20 MHz					
Modulation	Channel	RB Configuration		Occupied Bandwidth (MHz)	Verdict
		Size	Offset		
QPSK	LCH	100	0	17.851	PASS
	MCH	100	0	17.884	PASS
	HCH	100	0	17.845	PASS
16QAM	LCH	100	0	17.850	PASS
	MCH	100	0	17.877	PASS
	HCH	100	0	17.838	PASS

The results shown in this test report refer only to the sample(s) tested unless otherwise stated and the sample(s) are retained for 30 days only. The document is issued by AGC, this document cannot be reproduced except in full with our prior written permission. The more details and the authenticity of the report will be confirmed at http://www.agc-cert.com.

LTE Band 40

Channel Bandwidth: 5MHz

Channel Bandwidth: 5 MHz					
Modulation	Channel	RB Configuration		Occupied Bandwidth(MHz)	Verdict
		Size	Offset		
QPSK	LCH	25	0	4.4777	PASS
	MCH	25	0	4.4608	PASS
	HCH	25	0	4.4772	PASS
16QAM	LCH	25	0	4.4699	PASS
	MCH	25	0	4.4710	PASS
	HCH	25	0	4.4617	PASS

Channel Bandwidth: 10 MHz

Channel Bandwidth: 10 MHz					
Modulation	Channel	RB Configuration		Occupied Bandwidth (MHz)	Verdict
		Size	Offset		
QPSK	LCH	50	0	8.9167	PASS
	MCH	50	0	8.9278	PASS
	HCH	50	0	8.9375	PASS
16QAM	LCH	50	0	8.9244	PASS
	MCH	50	0	8.9298	PASS
	HCH	50	0	8.9239	PASS

The results shown in this test report refer only to the sample(s) tested unless otherwise stated and the sample(s) are retained for 30 days only. The document is issued by AGC, this document cannot be reproduced except in full with our prior written permission. The more details and the authenticity of the report will be confirmed at http://www.agc-cert.com.

Channel Bandwidth: 15 MHz

Channel Bandwidth: 15 MHz					
Modulation	Channel	RB Configuration		Occupied Bandwidth (MHz)	Verdict
		Size	Offset		
QPSK	LCH	75	0	13.363	PASS
	MCH	75	0	13.410	PASS
	HCH	75	0	13.399	PASS
16QAM	LCH	75	0	13.352	PASS
	MCH	75	0	13.413	PASS
	HCH	75	0	13.384	PASS

Channel Bandwidth: 20 MHz

Channel Bandwidth: 20 MHz					
Modulation	Channel	RB Configuration		Occupied Bandwidth (MHz)	Verdict
		Size	Offset		
QPSK	LCH	100	0	17.773	PASS
	MCH	100	0	17.884	PASS
	HCH	100	0	17.860	PASS
16QAM	LCH	100	0	17.760	PASS
	MCH	100	0	17.901	PASS
	HCH	100	0	17.872	PASS

The results shown in this test report refer only to the sample(s) tested unless otherwise stated and the sample(s) are retained for 30 days only. The document is issued by AGC, this document cannot be reproduced except in full with our prior written permission. The more details and the authenticity of the report will be confirmed at http://www.agc-cert.com.

LTE Band 41

Channel Bandwidth: 5MHz

Channel Bandwidth: 5 MHz					
Modulation	Channel	RB Configuration		Occupied Bandwidth(MHz)	Verdict
		Size	Offset		
QPSK	LCH	25	0	4.4713	PASS
	MCH	25	0	4.4633	PASS
	HCH	25	0	4.4778	PASS
16QAM	LCH	25	0	4.4737	PASS
	MCH	25	0	4.4784	PASS
	HCH	25	0	4.4630	PASS

Channel Bandwidth: 10 MHz

Channel Bandwidth: 10 MHz					
Modulation	Channel	RB Configuration		Occupied Bandwidth (MHz)	Verdict
		Size	Offset		
QPSK	LCH	50	0	8.9211	PASS
	MCH	50	0	8.9237	PASS
	HCH	50	0	8.9217	PASS
16QAM	LCH	50	0	8.9346	PASS
	MCH	50	0	8.9263	PASS
	HCH	50	0	8.9405	PASS

The results shown in this test report refer only to the sample(s) tested unless otherwise stated and the sample(s) are retained for 30 days only. The document is issued by AGC, this document cannot be reproduced except in full with our prior written permission. The more details and the authenticity of the report will be confirmed at http://www.agc-cert.com.

Channel Bandwidth: 15 MHz

Channel Bandwidth: 15 MHz					
Modulation	Channel	RB Configuration		Occupied Bandwidth (MHz)	Verdict
		Size	Offset		
QPSK	LCH	75	0	13.393	PASS
	MCH	75	0	13.411	PASS
	HCH	75	0	13.392	PASS
16QAM	LCH	75	0	13.404	PASS
	MCH	75	0	13.411	PASS
	HCH	75	0	13.397	PASS

Channel Bandwidth: 20 MHz

Channel Bandwidth: 20 MHz					
Modulation	Channel	RB Configuration		Occupied Bandwidth (MHz)	Verdict
		Size	Offset		
QPSK	LCH	100	0	17.881	PASS
	MCH	100	0	17.876	PASS
	HCH	100	0	17.850	PASS
16QAM	LCH	100	0	17.867	PASS
	MCH	100	0	17.876	PASS
	HCH	100	0	17.868	PASS

Note: Please refers to Appendix B for compliance test plots for Occupied Bandwidth (99%)

The results shown in this test report refer only to the sample(s) tested unless otherwise stated and the sample(s) are retained for 30 days only. The document is issued by AGC, this document cannot be reproduced except in full with our prior written permission. The more details and the authenticity of the report will be confirmed at http://www.agc-cert.com.

10. EMISSION BANDWIDTH

10.1 MEASUREMENT METHOD

The test set up and general procedure is similar to conducted peak output power test. Only different for setting the measurement configuration of the measuring instrument of Spectrum Analyzer.

10.2 PROVISIONS APPLICABLE

The emission bandwidth is defined as two points, one below the carrier center frequency and one above the carrier center frequency, outside of which all emissions are attenuated at least 26dB below the transmitter power.

10.3 MEASUREMENT RESULT

The occupied bandwidth, that is the frequency bandwidth such that, below its lower and above its upper frequency limits, the mean powers radiated are each equal to 0.5 percent of the total mean power radiated by a given emission shall be measured. All modes of operation were investigated and the worst case configuration results are reported in this section.

The results shown in this test report refer only to the sample(s) tested unless otherwise stated and the sample(s) are retained for 30 days only. The document is issued by AGC, this document cannot be reproduced except in full with our prior written permission. The more details and the authenticity of the report will be confirmed at http://www.agc-cert.com.

LTE Band 7

Channel Bandwidth: 5 MHz

Channel Bandwidth: 5MHz					
Modulation	Channel	RB Configuration		26dB Bandwidth (MHz)	Verdict
		Size	Offset		
QPSK	LCH	25	0	4.859	PASS
	MCH	25	0	4.909	PASS
	HCH	25	0	4.926	PASS
16QAM	LCH	25	0	4.843	PASS
	MCH	25	0	4.822	PASS
	HCH	25	0	4.930	PASS

Channel Bandwidth: 10 MHz

Channel Bandwidth: 10MHz					
Modulation	Channel	RB Configuration		26dB Bandwidth (MHz)	Verdict
		Size	Offset		
QPSK	LCH	50	0	9.554	PASS
	MCH	50	0	9.555	PASS
	HCH	50	0	9.565	PASS
16QAM	LCH	50	0	9.484	PASS
	MCH	50	0	9.502	PASS
	HCH	50	0	9.506	PASS

The results shown in this test report refer only to the sample(s) tested unless otherwise stated and the sample(s) are retained for 30 days only. The document is issued by AGC, this document cannot be reproduced except in full with our prior written permission. The more details and the authenticity of the report will be confirmed at http://www.agc-cert.com.

Channel Bandwidth: 15 MHz

Channel Bandwidth: 15MHz					
Modulation	Channel	RB Configuration		26dB Bandwidth (MHz)	Verdict
		Size	Offset		
QPSK	LCH	75	0	14.06	PASS
	MCH	75	0	14.18	PASS
	HCH	75	0	14.08	PASS
16QAM	LCH	75	0	14.07	PASS
	MCH	75	0	14.13	PASS
	HCH	75	0	14.12	PASS

Channel Bandwidth: 20 MHz

Channel Bandwidth: 20MHz					
Modulation	Channel	RB Configuration		26dB Bandwidth (MHz)	Verdict
		Size	Offset		
QPSK	LCH	100	0	18.59	PASS
	MCH	100	0	18.68	PASS
	HCH	100	0	18.72	PASS
16QAM	LCH	100	0	18.67	PASS
	MCH	100	0	18.63	PASS
	HCH	100	0	18.66	PASS

The results shown in this test report refer only to the sample(s) tested unless otherwise stated and the sample(s) are retained for 30 days only. The document is issued by AGC, this document cannot be reproduced except in full with our prior written permission. The more details and the authenticity of the report will be confirmed at http://www.agc-cert.com.

LTE Band 17

Channel Bandwidth: 5 MHz

Channel Bandwidth: 5MHz					
Modulation	Channel	RB Configuration		26dB Bandwidth (MHz)	Verdict
		Size	Offset		
QPSK	LCH	25	0	4.847	PASS
	MCH	25	0	4.888	PASS
	HCH	25	0	4.841	PASS
16QAM	LCH	25	0	4.919	PASS
	MCH	25	0	4.907	PASS
	HCH	25	0	4.876	PASS

Channel Bandwidth: 10 MHz

Channel Bandwidth: 10MHz					
Modulation	Channel	RB Configuration		26dB Bandwidth (MHz)	Verdict
		Size	Offset		
QPSK	LCH	50	0	9.492	PASS
	MCH	50	0	9.482	PASS
	HCH	50	0	9.452	PASS
16QAM	LCH	50	0	9.580	PASS
	MCH	50	0	9.494	PASS
	HCH	50	0	9.469	PASS

The results shown in this test report refer only to the sample(s) tested unless otherwise stated and the sample(s) are retained for 30 days only. The document is issued by AGC, this document cannot be reproduced except in full with our prior written permission. The more details and the authenticity of the report will be confirmed at http://www.agc-cert.com.

LTE Band 38

Channel Bandwidth: 5 MHz

Channel Bandwidth: 5MHz					
Modulation	Channel	RB Configuration		26dB Bandwidth (MHz)	Verdict
		Size	Offset		
QPSK	LCH	25	0	4.816	PASS
	MCH	25	0	4.801	PASS
	HCH	25	0	4.827	PASS
16QAM	LCH	25	0	4.780	PASS
	MCH	25	0	4.764	PASS
	HCH	25	0	4.854	PASS

Channel Bandwidth: 10 MHz

Channel Bandwidth: 10MHz					
Modulation	Channel	RB Configuration		26dB Bandwidth (MHz)	Verdict
		Size	Offset		
QPSK	LCH	50	0	9.295	PASS
	MCH	50	0	9.338	PASS
	HCH	50	0	9.309	PASS
16QAM	LCH	50	0	9.326	PASS
	MCH	50	0	9.354	PASS
	HCH	50	0	9.363	PASS

The results shown in this test report refer only to the sample(s) tested unless otherwise stated and the sample(s) are retained for 30 days only. The document is issued by AGC, this document cannot be reproduced except in full with our prior written permission. The more details and the authenticity of the report will be confirmed at http://www.agc-cert.com.

Channel Bandwidth: 15 MHz

Channel Bandwidth: 15MHz					
Modulation	Channel	RB Configuration		26dB Bandwidth (MHz)	Verdict
		Size	Offset		
QPSK	LCH	75	0	13.99	PASS
	MCH	75	0	14.01	PASS
	HCH	75	0	14.01	PASS
16QAM	LCH	75	0	13.96	PASS
	MCH	75	0	14.02	PASS
	HCH	75	0	14.04	PASS

Channel Bandwidth: 20 MHz

Channel Bandwidth: 20MHz					
Modulation	Channel	RB Configuration		26dB Bandwidth (MHz)	Verdict
		Size	Offset		
QPSK	LCH	100	0	18.50	PASS
	MCH	100	0	18.59	PASS
	HCH	100	0	18.62	PASS
16QAM	LCH	100	0	18.54	PASS
	MCH	100	0	18.66	PASS
	HCH	100	0	18.64	PASS

The results shown in this test report refer only to the sample(s) tested unless otherwise stated and the sample(s) are retained for 30 days only. The document is issued by AGC, this document cannot be reproduced except in full with our prior written permission. The more details and the authenticity of the report will be confirmed at http://www.agc-cert.com.

LTE Band 40

Channel Bandwidth: 5 MHz

Channel Bandwidth: 5MHz					
Modulation	Channel	RB Configuration		26dB Bandwidth (MHz)	Verdict
		Size	Offset		
QPSK	LCH	25	0	4.881	PASS
	MCH	25	0	4.782	PASS
	HCH	25	0	4.834	PASS
16QAM	LCH	25	0	4.813	PASS
	MCH	25	0	4.806	PASS
	HCH	25	0	4.847	PASS

Channel Bandwidth: 10 MHz

Channel Bandwidth: 10MHz					
Modulation	Channel	RB Configuration		26dB Bandwidth (MHz)	Verdict
		Size	Offset		
QPSK	LCH	50	0	9.424	PASS
	MCH	50	0	9.359	PASS
	HCH	50	0	9.495	PASS
16QAM	LCH	50	0	9.426	PASS
	MCH	50	0	9.420	PASS
	HCH	50	0	9.421	PASS

The results shown in this test report refer only to the sample(s) tested unless otherwise stated and the sample(s) are retained for 30 days only. The document is issued by AGC, this document cannot be reproduced except in full with our prior written permission. The more details and the authenticity of the report will be confirmed at http://www.agc-cert.com.

Channel Bandwidth: 15 MHz

Channel Bandwidth: 15MHz					
Modulation	Channel	RB Configuration		26dB Bandwidth (MHz)	Verdict
		Size	Offset		
QPSK	LCH	75	0	14.03	PASS
	MCH	75	0	14.03	PASS
	HCH	75	0	13.97	PASS
16QAM	LCH	75	0	13.96	PASS
	MCH	75	0	14.11	PASS
	HCH	75	0	13.99	PASS

Channel Bandwidth: 20 MHz

Channel Bandwidth: 20MHz					
Modulation	Channel	RB Configuration		26dB Bandwidth (MHz)	Verdict
		Size	Offset		
QPSK	LCH	100	0	18.49	PASS
	MCH	100	0	18.58	PASS
	HCH	100	0	18.61	PASS
16QAM	LCH	100	0	18.51	PASS
	MCH	100	0	18.60	PASS
	HCH	100	0	18.55	PASS

The results shown in this test report refer only to the sample(s) tested unless otherwise stated and the sample(s) are retained for 30 days only. The document is issued by AGC, this document cannot be reproduced except in full with our prior written permission. The more details and the authenticity of the report will be confirmed at http://www.agc-cert.com.

LTE Band 41

Channel Bandwidth: 5 MHz

Channel Bandwidth: 5MHz					
Modulation	Channel	RB Configuration		26dB Bandwidth (MHz)	Verdict
		Size	Offset		
QPSK	LCH	25	0	4.768	PASS
	MCH	25	0	4.789	PASS
	HCH	25	0	4.766	PASS
16QAM	LCH	25	0	4.759	PASS
	MCH	25	0	4.804	PASS
	HCH	25	0	4.821	PASS

Channel Bandwidth: 10 MHz

Channel Bandwidth: 10MHz					
Modulation	Channel	RB Configuration		26dB Bandwidth (MHz)	Verdict
		Size	Offset		
QPSK	LCH	50	0	9.505	PASS
	MCH	50	0	9.388	PASS
	HCH	50	0	9.445	PASS
16QAM	LCH	50	0	9.431	PASS
	MCH	50	0	9.427	PASS
	HCH	50	0	9.431	PASS

The results shown in this test report refer only to the sample(s) tested unless otherwise stated and the sample(s) are retained for 30 days only. The document is issued by AGC, this document cannot be reproduced except in full with our prior written permission. The more details and the authenticity of the report will be confirmed at http://www.agc-cert.com.

Channel Bandwidth: 15 MHz

Channel Bandwidth: 15MHz					
Modulation	Channel	RB Configuration		26dB Bandwidth (MHz)	Verdict
		Size	Offset		
QPSK	LCH	75	0	13.99	PASS
	MCH	75	0	14.12	PASS
	HCH	75	0	14.05	PASS
16QAM	LCH	75	0	14.07	PASS
	MCH	75	0	14.10	PASS
	HCH	75	0	14.06	PASS

Channel Bandwidth: 20 MHz

Channel Bandwidth: 20MHz					
Modulation	Channel	RB Configuration		26dB Bandwidth (MHz)	Verdict
		Size	Offset		
QPSK	LCH	100	0	18.62	PASS
	MCH	100	0	18.59	PASS
	HCH	100	0	18.54	PASS
16QAM	LCH	100	0	18.61	PASS
	MCH	100	0	18.56	PASS
	HCH	100	0	18.57	PASS

The results shown in this test report refer only to the sample(s) tested unless otherwise stated and the sample(s) are retained for 30 days only. The document is issued by AGC, this document cannot be reproduced except in full with our prior written permission. The more details and the authenticity of the report will be confirmed at http://www.agc-cert.com.