Evergreen Classics®

Instructions Guide

COLOR BLAST™ Tunes

Color Blast Tunes Tree

FOR INDOOR USE ONLY

WARNING

IMPORTANT SAFETY INSTRUCTIONS
When using electrical products, basic precautions should always be followed including the following:
READ AND FOLLOW ALL SAFETY INSTRUCTIONS.

1. Do not use seasonal products outdoors unless marked suitable for indoor and outdoor use. When products are used in outdoor applications, connect the product to a Ground Fault Circuit Interrupting (GFCI) outlet. If one is not provided, contact a qualified electrician for proper installation.
2. This seasonal use product is not intended for permanent installation or use.
3. Do not mount or place near gas or electric heaters, fireplaces, candles or other similar sources of heat.
4. Do not secure the wiring of the product with staples or nails, or place on sharp hooks or nails.
5. Do not let lamps rest on the supply cord or on any wire.
6. Unplug the product when leaving the house, or when retiring for the night, (or if left unattended).
7. This is an electric product-not a toy! To avoid risk of fire, burns, personal injury and electric shock it should not be played with or placed where small children can reach it.
8. Do not use this product for other than its intended use.
9. Do not hang ornaments or other objects from cord, wire, or light string.
10. Do not close doors or windows on the product or extension cords as this may damage the wire insulation.
11. Do not cover the product with cloth, paper or any material not part of the product when in use.
12. Read and follow all instructions that are on the product or provided with the product.

SAVE THESE INSTRUCTIONS.

CAUTION

1. Set up the tree according to the number tag sequence attached to each tree section from the bottom to the top. Section #1 from the bottom on the tree stand, followed by Section #2 on top, and so on. Random setup will result in electrical malfunction.
2. Before first use, remove all protective packing materials around the Music Controller Speaker.
   Do not cover the Music Controller Speaker with unnecessary items. This may cause distorted sound and damage the speaker. It can also cause the speaker to burn out.
3. To reduce the risk of fire and electric shock:
   a) Use only the power supply that is provided with this product. Using a different adapter will damage the lights and may cause fire, or electrical shock hazards;
   b) Do not install on trees that have needles, leaves or branches covering with metal or materials which look like metal;
   c) Do not mount or support strings in a manner that can cut or damage wire insulation.
4. The light source of this luminaire is not replaceable; when the light source reaches its end of life the whole luminaire shall be replaced.
5. Do not connect the chain to the supply while it is in the packing.
6. The lamps are not replaceable.
7. Do not interconnect parts of this lighting chain with parts of another manufacturer's lighting chain.
8. Interconnection shall be made only by the use of the supplied connectors. Any open ends must be sealed-off before use.

Do not dispose of electrical appliances as unsorted municipal waste, use separate collection facilities. Contact your local government for information regarding the collection systems available. If electrical appliances are disposed of in landfills or dumps, hazardous substances can leak into the groundwater and get into the food chain, damaging your health and well-being.

ITEM #: TG76P3B20P08

Use and Care Instructions

1. Before using or reusing, inspect product carefully. Discard any products that have cut, damaged, or frayed wire insulation or cords, cracks in the lampholders or enclosures, loose connections, or exposed copper wire.
2. When storing the product, carefully remove the product from wherever it is placed, including trees, branches, or bushes, to avoid any undue strain or stress on the product conductors, connections, and wires.
3. When not in use, store neatly in a cool, dry location protected from sunlight.

Technical Specifications

AC Adapter
Input: 120 V~ / 60 Hz, 0.83 A
Output: DC 24 V, 2 A
Controller: DC 24 V, 2 A

Physical Setup

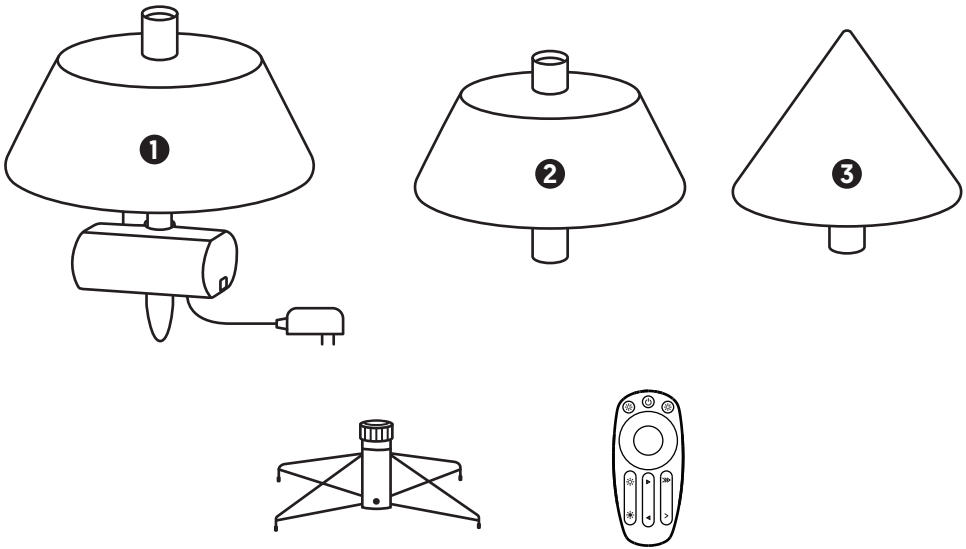

a.

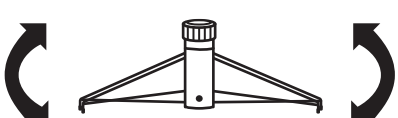

b.

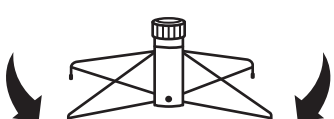

c.

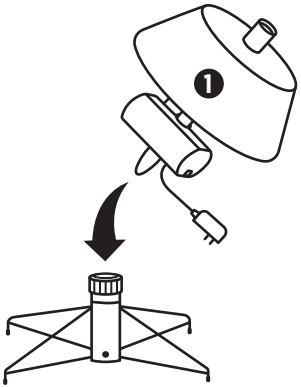

d.

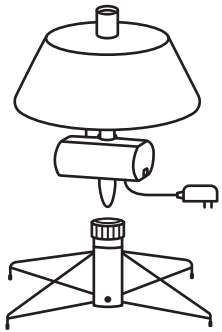

e.

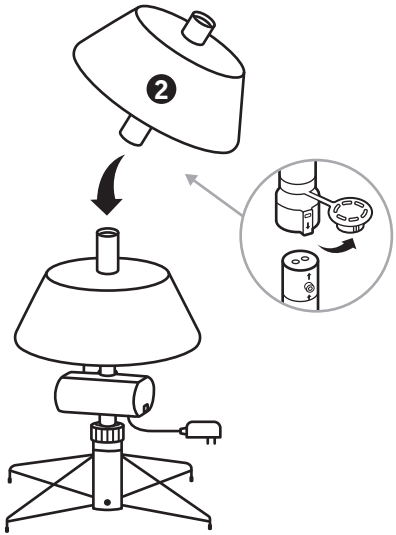

f.

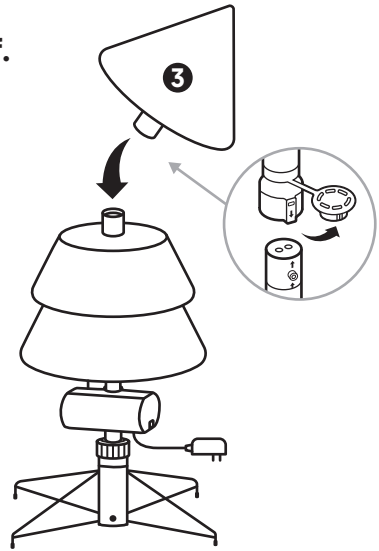

g.

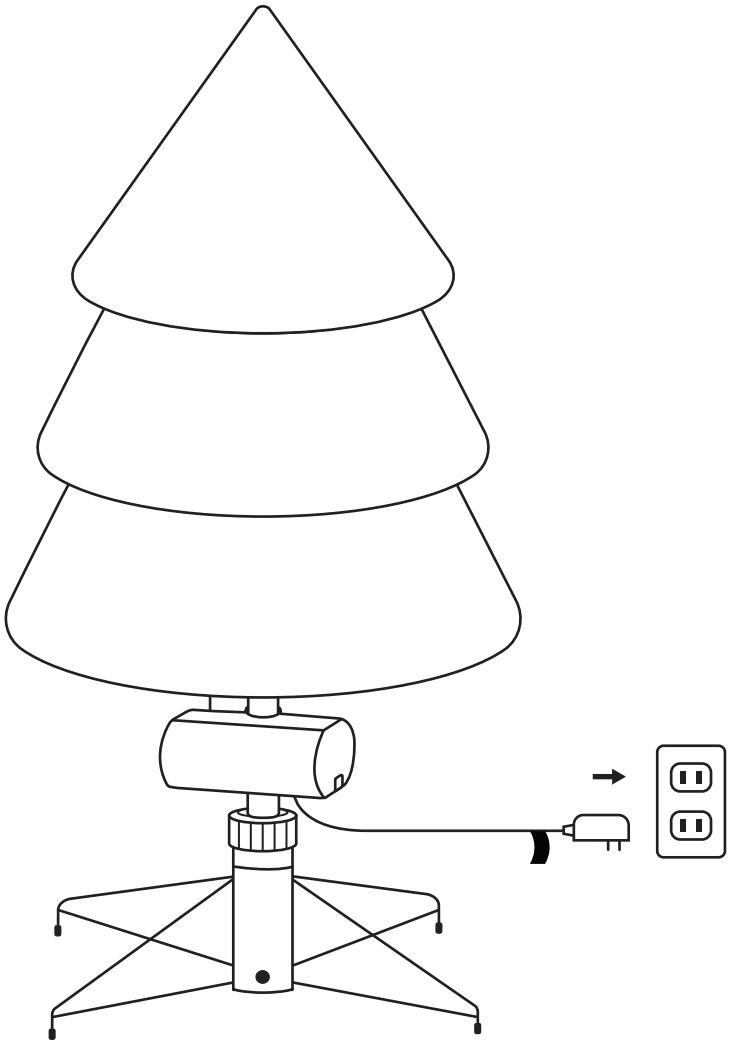

Remote Control Instructions

Remove the insulation tab of the remote controller.

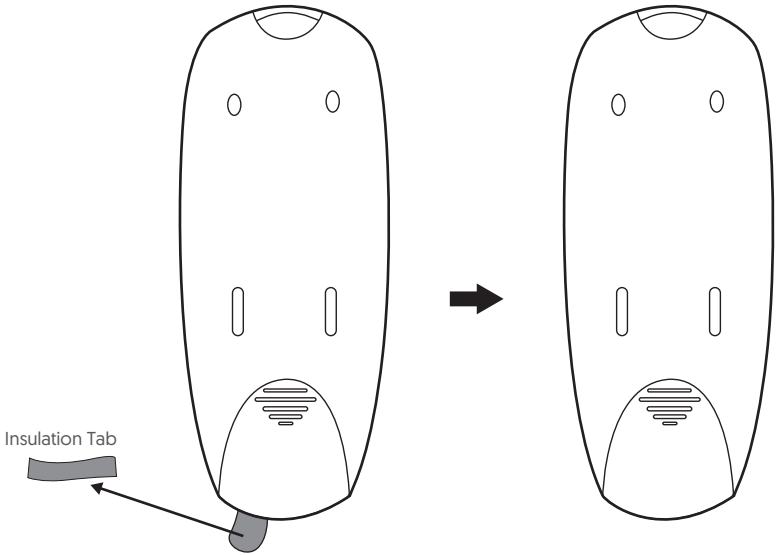

Key Functions

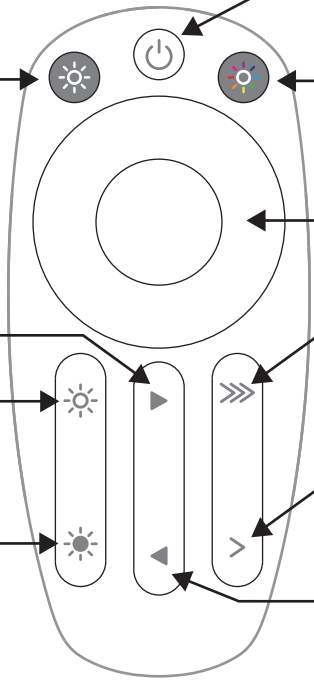

ON/OFF

Warm White Steady Glow

Tap to display all lights in warm white steady glow

Multi Color Steady Glow

Tap to display all lights in multi color steady glow

Color Wheel

Customizable color selection

Next Preset Motion Effect

Faster Light Effect For Preset Motion

Brightness Up

Slower Light Effect For Preset Motion

Brightness Down

Previous Preset Motion Effect

Tap ▶ or ◀ to select from the 8 preset motion effects:

- Fading
- 3-Ring Motion
- Color-Changing
- Fireworks
- Falling Rings
- Twinkle
- Multicolor Ball
- Rainbow

This product may potentially trigger seizures for people with photosensitive epilepsy when using the motion effect light modes.

Bluetooth Connection

To connect your mobile device via Bluetooth, press ▶ or ◀ button on the remote until you get to Rainbow mode. You will hear a beep, and Bluetooth will be searchable. Use your mobile device to find "Color Blast Tunes".
Once connected, play the music on your phone, and music will be played through the built-in music speaker under the tree. The light effects will sync with the rhythm of the music chosen. Music will stop playing when Bluetooth is disconnected.
NOTE: For the lights to receive clear signals, play the music from your mobile device at a higher volume.

Aux Outlet

Songs can be played via external speaker. Connect the Color Blast Tunes speaker to an external speaker with a 3.5 mm audio cable. Once connected through the audio cable, the music will be output from the external speaker instead of the Color Blast Tunes speaker.

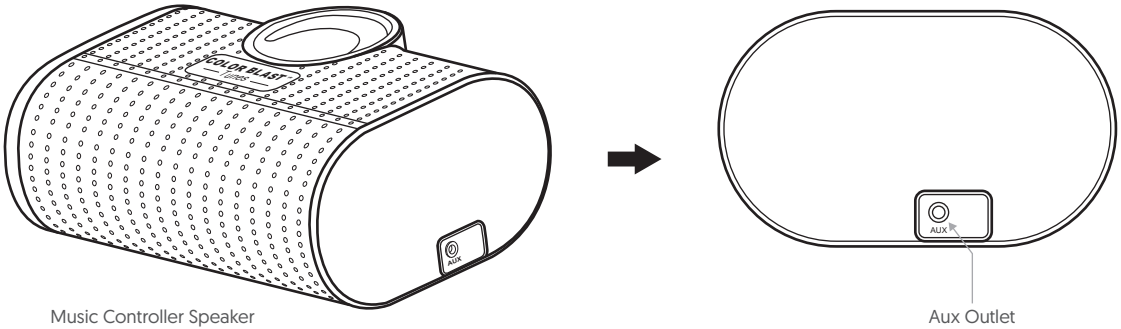

Battery Replacement

1. Slide open the battery cover.
2. Replace with a new CR2032 button cell battery with correct polarities (+/-) as indicated.
3. Slide the battery cover closed.

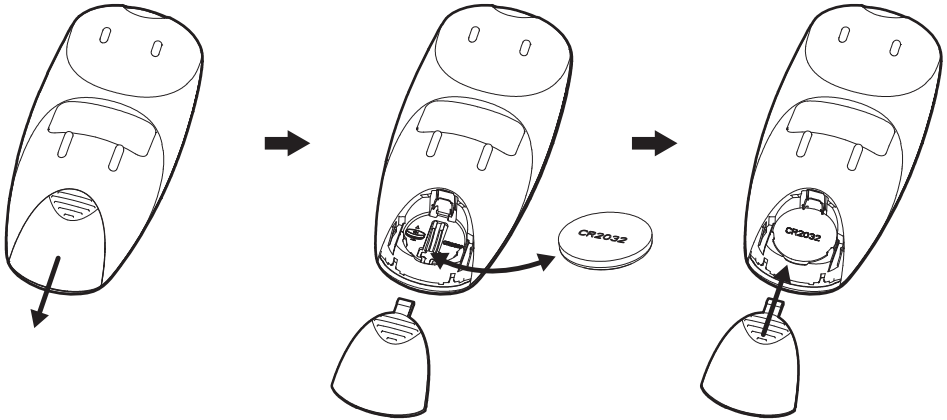

WARNING

1. This product is powered by a lithium battery. Due to their small size, lithium batteries can easily be swallowed by children. Ingestion of such batteries has been known to cause death.
2. This is a lithium battery which if swallowed has been known to cause death.
3. Small parts, keep batteries out of reach of children.
4. Do not expose the remote controller to moisture.
5. Dispose of used batteries properly（by following directions on batteries),and local laws and regulations regarding the disposal of hazardous waste.
6. Clean the battery contact surfaces prior to battery installation.
7. Remove batteries when not used for an extended period of time, or when depleted.
8. Use only CR2032 button cell battery for remote controller.
9. Do not dispose of batteries in fire – batteries may leak or rupture.

STORAGE INSTRUCTIONS

1. Unplug from power source, and detach plug from adapter. Remove all ornaments and decorations.
2. Disassemble the tree from top to bottom. Gently lift pole straight up to remove from the lower section, and fold all branches toward the pole.
3. Close the protective caps on the poles to avoid damaging the internal parts.
4. Place the disassembled tree into the shipping box and tape it shut.
5. Store your tree in a cool, dry place away from sunlight. Exposure to excessive heat or humidity may damage your tree.

TROUBLESHOOTING TIPS

If Tree Does Not Illuminate / Some Bulbs Do Not Light or Flicker

1. Check to make sure that all plugs and adapter are properly connected as indicated.
2. Turn the poles gently to make sure pole-to-pole connection is secured.

Loose Hinge Pin

1. Place the branch into the hinge bracket.
2. Insert a new hinge pin all through the holes of bracket, and secure with a washer.

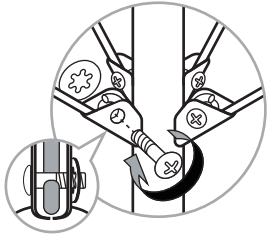

SPARE PARTS

This tree includes sets of hinge pins & washers.
If extra parts are needed, please contact our customer service center.
www.polygroupstore.com or +1 (888) 919-0070.

Polygroup® Trading Limited
Unit 606, 6th Floor, Fairmont House,
No.8 Cotton Tree Drive,
Central, Hong Kong

FCC Caution:

Any Changes or modifications not expressly approved by the party responsible for compliance could void the user's authority to operate the equipment.

This device complies with part 15 of the FCC Rules. Operation is subject to the following two conditions: (1) This device may not cause harmful interference, and (2) this device must accept any interference received, including interference that may cause undesired operation.

IMPORTANT NOTE:

Note: This equipment has been tested and found to comply with the limits for a Class B digital device, pursuant to part 15 of the FCC Rules. These limits are designed to provide reasonable protection against harmful interference in a residential installation. This equipment generates, uses and can radiate radio frequency energy and, if not installed and used in accordance with the instructions, may cause harmful interference to radio communications. However, there is no guarantee that interference will not occur in a particular installation. If this equipment does cause harmful interference to radio or television reception, which can be determined by turning the equipment off and on, the user is encouraged to try to correct the interference by one or more of the following measures:

—Reorient or relocate the receiving antenna.

—Increase the separation between the equipment and receiver.

—Connect the equipment into an outlet on a circuit different from that to which the receiver is connected.

—Consult the dealer or an experienced radio/TV technician for help.

FCC Radiation Exposure Statement:

This equipment complies with FCC radiation exposure limits set forth for an uncontrolled environment.

ISEDC Warning

This device complies with Innovation, Science, and Economic Development Canada licence-exempt RSS standard(s). Operation is subject to the following two conditions:
(1) this device may not cause interference, and
(2) this device must accept any interference, including interference that may cause undesired operation of the device.

Le présent appareil est conforme aux CNR d' Innovation, Sciences et Développement économique Canada applicables aux appareils radio exempts de licence. L'exploitation est autorisée aux deux conditions suivantes :
(1) l'appareil nedoit pas produire de brouillage, et
(2) l'utilisateur de l'appareil doit accepter tout brouillage radioélectrique subi, même si le brouillage est susceptible d'en compromettre le fonctionnement.

The device is compliance with RF exposure guidelines, users can obtain Canadian information on RF exposure and compliance.
Le présent appareil est conforme Après examen de ce matériel aux conformité ou aux limites d’intensité de champ RF, les utilisateurs peuvent sur l’exposition aux radiofréquences et la conformité and compliance d’acquérir les informations correspondantes.