WARRANTY REGISTRATION

**REGISTER FOR EXTRA BENEFITS**

Activate within 30 days of purchase:
**seura.com/activate**

SÉURA®

# 80W Soundbar

**USER MANUAL**

SSB-1
SSB-2

# Welcome and Thank you

## Table of Contents

## (Katy)

## Specifications

| | | SSB-1 | SSB-2 |
|---|---|---|---|
| GENERAL | OPERATING TEMPERATURE RANGE | -40°F to 140°F* | -40°F to 140°F* |
| | OPERATING HUMIDITY RANGE | 10–90% RH, non-condensing | 10–90% RH, non-condensing |
| | WATERPROOF RATING | IP55 Minimum Rating | IP55 Minimum Rating |
| INTEGRATION | POWER CONSUMPTION | 100-240V, 50-60Hz, 60W RMS, 80W Peak | 100-240V, 50-60Hz, 60W RMS, 80W Peak |
| | OPTICAL AUDIO INPUT | 1 | 1 |
| | ANALOG AUDIO INPUT | 1 (3.5 mm) | 1 (3.5 mm) |
| AUDIO | DRIVERS | (4) 3 Inch 8.0Ω Drivers | (4) 3 Inch 8.0Ω Drivers |
| | FREQUENCY RESPONSE | 40Hz-20kHz | 40Hz-20kHz |
| | SPEAKER OUTPUT | Internal Amplifier, 4x15W RMS | Internal Amplifier, 4x15W RMS |
| INSTALLATION | GRILL TYPE | Powder Coated | |
| | PRODUCT DIMENSIONS | 37.8" w x 5.5" h x 3.5" d | 57.0" w x 5.5" h x 3.5" d |
| | PRODUCT WEIGHT | 13.0 lbs | 20.0 lbs |
| | MOUNTING | Includes wall mounting bracket and compatible mounting rails for Outdoor TVs via TV VESA pattern | |
| OTHER | CERTIFICATIONS AND COMPLIANCE | UL, FCC | |
| | WARRANTY | Séura warrants Outdoor Soundbars with respect to labor and parts for two (2) years. | |

*Installation in sunlight reduces the maximum permitted air temperature.

# WARNING: READ ALL INSTRUCTIONS BEFORE ATTEMPTING TO INSTALL OR SERVICE THIS PRODUCT.

This symbol is intended to alert the user to the presence of uninsulated “dangerous voltage” within the product’s enclosure that may be of sufficient magnitude to constitute a risk of electric shock to persons.

This symbol is intended to alert the user to the presence of important operating and maintenance instructions in the literature accompanying the appliance.

**CAUTION**

RISK OF ELECTRIC SHOCK
DO NOT OPEN

CAUTION: TO REDUCE THE RISK OF ELECTRIC SHOCK DO NOT OPEN BACK PANEL, NO USER-SERVICEABLE PARTS INSIDE, REFER SERVICING TO QUALIFIED SERVICE PERSONNEL.

## Warnings:

Do not handle or remove your outdoor display from the packaging until it is ready to be installed.
To avoid damage to the outdoor display, only transport it in a vertical position.
It is highly recommended that at least two (2) persons assist in the installation of the outdoor display.

**Do not submerge Séura® Outdoor Display in water:** The Séura® Outdoor Display will resist water exposure from normal rain, sprinklers, snow, etc.; however, it is not designed to be submerged in water.

**Do not wash with garden hose or pressure-wash:** Séura® Outdoor Display will resist water exposure from normal rain, sprinklers, snow etc.; however, it is not designed to withstand pressure washers, high-pressure water jets, projected snow from a blower, or hurricane-type weather.

**Do not let metal pieces or objects of any kind fall into the display.** High voltage flows in the product, and inserting an object can cause electric shock and/or short internal parts.

**To prevent fire**, never place any type of candle or flames on the top or near the display.

**To prevent fire or shock hazard**, do not place the AC cord under the display or other heavy items.

**Power Lines**

An outside antenna system should not be located in the vicinity of overhead power lines or other electric light or power circuits, or where it can fall into such power lines or circuits. When installing an outside antenna system, extreme care should be taken to keep from touching such power lines or circuits as contact with them might be fatal.

**Accessories**

Do not use accessories not specifically recommended by the manufacturer. Use of improper attachments can result in accidents.

## *AVERTISSEMENT: LIRE TOUTES LES INSTRUCTIONS AVANT D'INSTALLER OU SERVICE CE PRODUIT.*

Ce symbole est destiné à alerter l'utilisateur de la présence d'une «tension dangereuse» non isolée à l'intérieur de l'enceinte du produit qui peut être d'une amplitude suffisante pour constituer un risque de choc électrique pour les personnes.

Ce symbole est destiné à alerter l'utilisateur de la présence d'instructions importantes d'utilisation et de maintenance dans la documentation accompagnant l'appareil.

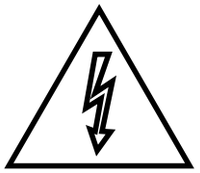

**CAUTION**

RISQUE DE CHOC ELECTRIQUE. NE PAS OUVRIR.

ATTENTION: POUR RÉDUIRE LE RISQUE DE CHOC ÉLECTRIQUE, NE RETIREZ PAS LE CAPOT (NI L'ARRIÈRE), AUCUNE PIÈCE RÉPARABLE PAR L'UTILISATEUR, RÉFÉREZ L'ENTRETIEN AU PERSONNEL DE SERVICE QUALIFIÉ.

## *Avertissements:*

*Ne pas manipuler ou supprimer votre moniteur extérieure de l'emballage jusqu'à ce qu'il soit prêt à être installé.*
*Pour éviter d'endommager la moniteur en plein air, seul le transporter dans une position verticale.*
*Il est fortement recommandé qu'au moins deux (2) personnes aident à l'installation de la moniteur en plein air.*

*N'immergez pas le Séura® Outdoor moniteur dans l'eau: le moniteur Séura® Outdoor résistera à l'exposition à l'eau causée par la pluie, les gicleurs, la neige, etc. Cependant, il n'est pas conçu pour être immergé dans l'eau.*

*Ne lavez pas avec un tuyau d'arrosage ou avec un nettoyeur haute pression: Séura® Outdoor moniteur résistera à l'exposition à l'eau causée par la pluie, les sprinklers, la neige, etc. Cependant, il n'est pas conçu pour résister aux laveuses à pression, aux jets d'eau à haute pression, aux projections de neige d'un ventilateur ou aux intempéries de type ouragan.*

*Ne laissez pas de morceaux de métal ou d'objets de toute sorte tomber dans la moniteur. Une tension élevée circule dans le produit et l'insertion d'un objet peut provoquer un choc électrique et / ou un court-circuit des pièces internes.*

*Pour éviter les incendies, ne placez jamais de bougies ni de flammes sur le dessus ou à proximité du moniteur.*

*Pour éviter tout risque d'incendie ou d'électrocution, ne placez pas le cordon d'alimentation sous le moniteur ou d'autres objets lourds.*

*Les lignes électriques*

*Une antenne extérieure ne doit pas être située à proximité de lignes électriques aériennes ou d'autres circuits d'éclairage ou de circuits électriques, ni à un endroit où elle pourrait tomber dans de telles lignes ou circuits. Lorsque vous installez une antenne extérieure, veillez à ne pas toucher ces lignes ou circuits électriques, car tout contact avec ces derniers pourrait être fatal.*

*Accessoires*

*N'utilisez pas d'accessoires non spécifiquement recommandés par le fabricant. L'utilisation d'accessoires inappropriés peut entraîner des accidents.*

## WARNINGS

Never place a television set in an unstable location. A television set may fall, causing serious personal injury or death. Many injuries, particularly to children, can be avoided by taking simple precautions such as:

- Using cabinets or stands recommended by the manufacturer of the television set.
- Only using furniture that can safely support the television set.
- Ensuring the television set is not overhanging the edge of the supporting furniture.
- Not placing the television set on tall furniture (for example, cupboards or bookcases) without anchoring both the furniture and the television set to a suitable support.
- Not placing the television set on cloth or other materials that may be located between the television set and supporting furniture.
- Educating children about the dangers of climbing on furniture to reach the television set or its controls.

If your existing television set is being retained and relocated, the same considerations as above should be applied.

## *ATTENTION*

*Ne placez jamais un téléviseur dans un endroit instable. Un téléviseur peut tomber*

*et causer des blessures graves ou mortelles. Beaucoup de blessures, en particulier aux enfants, peuvent être évités en prenant des précautions simples telles que:*

- *Utilisation des armoires ou des supports recommandés par le fabricant du téléviseur.*
- *Seulement en utilisant des meubles qui peuvent supporter en toute sécurité le téléviseur.*
- *Assurer le téléviseur est pas surplombant le bord du meuble de support.*
- *Non placer le téléviseur sur un grand meuble (par exemple, des armoires ou des bibliothèques ) sans accrocher à la fois les meubles et le téléviseur sur un support approprié.*
- *Non placer le téléviseur sur le tissu ou d'autres matériaux qui peuvent être situés entre le téléviseur et le mobilier de soutien.*
- *Éduquer les enfants sur les dangers de grimper sur un meuble pour atteindre le téléviseur ou ses commandes.*

*Si votre téléviseur existant est conservé et transféré, les mêmes considérations que ci-dessus doivent être appliquées.*

**WARNING:** Cancer and Reproductive Harm: www.p65warnings.ca.gov.

Specifications of this product are subject to unannounced changes; this manual may thus not reflect the current technical status.

*Spécifications de ce produit sont sujettes à modifications sans préavis; ce manuel ne peut donc pas tenir compte de l'état de la technique actuelle.*

# FCC Supplier's Declaration of Conformity

Séura Outdoor 80W Soundbar
SSB-1, SSB-2

This device complies with part 15 of the FCC Rules. Operation is subject to the follow two conditions: (1) This device may not cause harmful interference, and (2) this device must accept any interference received, including interference that may cause undesired operation.

Séura
Address: 1230 Ontario Road, Green Bay, WI 54301 United States
Phone number: 920-857-9069

**Caution:** The user is cautioned that changes or modifications not expressly approved by the party responsible for compliance could void the user's authority to operate the equipment.

Note: This equipment has been tested and found to comply with the limits for a Class B digital device, pursuant to part 15 of the FCC Rules. These limits are designed to provide reasonable protection against harmful interference in a residential installation. This equipment generates uses and can radiate radio frequency energy and, if not installed and used in accordance with the instructions, may cause harmful interference to radio communications. However, there is no guarantee that interference will not occur in a particular installation. If this equipment does cause harmful interference to radio or television reception, which can be determined by turning the equipment off and on, the user is` encouraged to try to correct the interference by one or more of the following measures:

- Reorient or relocate the receiving antenna.
- Increase the separation between the equipment and receiver.
- Connect the equipment into an outlet on a circuit different from that to which the receiver is connected
- Consult the dealer or an experienced radio/TV technician for help.

This equipment complies with FCC radiation exposure limits set forth for an uncontrolled environment. This equipment should be installed and operated with a minimum distance of 20 cm between the radiator and any part of your body.

## WARNINGS

To reduce the risk of fire, electrical shock and other injuries, keep these safety precautions in mind when installing, using, and maintaining your outdoor display. The socket-outlet should be installed near the equipment and be easily accessible. The display should be connected to a grounded GFCI protected main socket outlet.

WARNING: If you manipulate against the recommended usage, serious injury or death to user may result.

## *AVERTISSEMENTS*

*Pour réduire le risque d'incendie, de choc électrique et d'autres blessures, garder ces consignes de sécurité à l'esprit lors de l'installation, l'utilisation et l'entretien de votre moniteur en plein air. La prise de courant doit être installée près de l'équipement et être facilement accessible. Le moniteur doit être relié à une prise de courant avec terre protégé par disjoncteur différentiel.*

*ATTENTION: Si vous manipulez contre l'utilisation recommandée, des blessures graves ou la mort à l'utilisateur peuvent en résulter.*

# Important Safety Instructions

1. Read these instructions.
2. Keep these instructions.
3. Heed all warnings.
4. Follow all instructions.
5. Clean only with a dry cloth.
6. Do not block any of the ventilation openings. Install in accordance with the manufacturer's instructions.
7. Do not install near any heat sources such as radiators, heat registers, stoves,or other apparatus (including amplifiers) that produce heat.
8. Do not defeat the safety purpose of the polarized or grounding type plug. A polarized plug has two blades with one wider than the other. A grounding type plug has two blades and a third grounding prong. The wide blade or the third prong is provided for your safety. When the provided plug does not fit into your outlet, consult an electrician for replacement of the obsolete outlet.
9. Protect the power cord from being walked on or pinched particularly at plugs, convenience receptacles, and the point where they exit from the apparatus.
10. Only use the attachments/accessories specified by the manufacturer.
11. Use only with the cart, stand, tripod, bracket, or table specified by the manufacturer, or sold with the apparatus. When a cart is used, use caution when moving the cart/ apparatus combination to avoid injury from tip-over.

12. Unplug this apparatus during lightning storms or when unused for long periods of time.
13. Refer all servicing to qualified service personnel. Servicing is required when the apparatus has been damaged in any way, such as power supply cord or plug is damaged, liquid has been spilled or objects have fallen into the apparatus, the apparatus has been exposed to rain or moisture, does not operate normally, or has been dropped.
14. To reduce the risk of fire or electric shock, do not expose the inside of this apparatus to rain or moisture. The inside of this apparatus shall not be exposed to dripping or splashing.
15. The apparatus shall not be exposed to dripping or splashing and that no objects filled with liquids, such as vases, shall be placed on the apparatus.
16. The apparatus shall be connected to a MAINS socket outlet with a protective earthing connection. Where the MAINS plug or an appliance coupler is used as the disconnect device, the disconnect device shall remain readily operable.
17. The disconnect device shall remain readily operable.
18. The socket-outlet shall be installed near the equipment and shall be easily accessible.
19. Inspect the desired location for installation and be aware of all electrical wiring pathways, water pipes, gas lines, or other potentially hazardous conditions that may exist to protect from accidental damage during creation of on-site conditions.
20. Ensure all required electrical specifications are adhered to and have been installed by the appropriate individuals and are code approved.
21. Ensure all framing requirements, if needed, have been completed to building code and pose no structural issues.
22. It is REQUIRED that this product is plugged into an electrical outlet protected by a Ground Fault Circuit Interrupter (GFCI) to protect against electric shock, fire, and/or injury. Failure to do so will void any warranty for this product.
23. Only qualified individuals should attempt to service the product. Removing covers can expose you to high voltage and other dangerous conditions.
24. Do not overload AC outlets or extension cords. Overloading can cause fire or electric shock.
25. Close adult supervision is necessary when any product is used by or near children.
26. Do not operate any product with a damaged cord or plug or operate it after the appliance malfunctions or has been damaged in any manner.
27. To electrically disconnect the product, turn OFF the product, then remove the electrical power plug from the outlet.
28. This Séura product is intended for use indoors and outdoors.
29. If you notice any smoke or scorched smell near the product, unplug power cord and refer to qualified personnel for service and/or repair.
30. Do not use or place any combustible or flammable substances near the product.
31. Do not use this product for other than intended use.
32. This product is water resistant. Do not immerse this product in water.
33. The cable distribution system should be grounded (earthed) in accordance with ANSI/NFPA 70, the National Electrical Code (NEC), in particular Section 820.93, Grounding of Outer Conductive Shield of a Coaxial Cable.

# *Consignes De Sécurité Importantes*

1. *Lisez ces instructions.*
2. *Conservez ces instructions.*
3. *Respectez tous les avertissements.*
4. *Suivez toutes les instructions.*
5. *Nettoyer uniquement avec un chiffon sec.*
6. *Ne pas bloquer les ouvertures de ventilation. Installez conformément aux instructions du fabricant.*
7. *Ne pas installer près de sources de chaleur telles que des radiateurs, registres de chaleur, poêles ou autres appareils (y compris les amplificateurs) qui produisent de la chaleur.*
8. *Ne pas contourner le dispositif de sécurité de la fiche polarisée ou mise à la terre. Une fiche polarisée possède deux lames dont une plus large que l'autre. Une prise de terre a deux lames et une troisième broche de mise à la terre. La lame large ou la troisième broche est fournie pour votre sécurité. Si la fiche fournie ne rentre pas dans votre prise, consultez un électricien pour remplacer la prise obsolète.*
9. *Protégez le cordon d'alimentation d'être piétiné ou pincé, en particulier au niveau des fiches, des prises de courant, et le point où ils sortent de l'appareil.*
10. *Utilisez uniquement les fixations / accessoires spécifiés par le fabricant.*
11. *Utilisez uniquement avec un chariot, un support, un trépied, un support ou une table spécifié par le fabricant ou vendu avec l'appareil. Quand un chariot est utilisé, faites attention lorsque vous déplacez l'ensemble chariot / appareil pour éviter les blessures en cas de chute.*

12. *Débranchez l'appareil en cas d'orage ou lorsqu'il est inutilisé pendant de longues périodes de temps.*
13. *Les travaux de personnel qualifié. Une réparation est nécessaire lorsque l'appareil a été endommagé de quelque façon que ce cordon d'alimentation ou la fiche est endommagé, du liquide a été renversé ou des objets sont tombés dans l'appareil, l'appareil a été exposé à la pluie ou à l'humidité, ne fonctionne pas normalement, ou est tombé.*
14. *Pour réduire le risque d'incendie ou de choc électrique, ne pas exposer l'intérieur de cet appareil à la pluie ou à l'humidité. L'intérieur de cet appareil ne doit pas être exposé à des gouttes ou des éclaboussures.*
15. *L'appareil ne doit pas être exposé à des gouttes ou des éclaboussures et aucun objet rempli de liquide, comme des vases, ne doit être placé sur l'appareil.*
16. *L'appareil ne doit être relié à une prise secteur dotée d'une connexion de terre de protection. Lorsque la prise du RESEAU D'ALIMENTATION ou une prise placée sur l'appareil est utilisée comme dispositif de déconnexion, ce dispositif doit demeure aisément accessible.*
17. *Le dispositif de déconnexion doit rester facilement accessible.*
18. *La prise de courant doit être installée près de l'équipement et doit être facilement accessible.*
19. *Inspecter l'emplacement souhaité pour l'installation et être conscient de toutes les voies de câblage électrique , les canalisations d'eau , conduites de gaz , ou d'autres conditions potentiellement dangereuses qui peuvent exister pour protéger contre les dommages accidentels lors de la création des conditions sur place.*
20. *Assurez-vous que toutes les spécifications électriques requises sont respectées et ont été installées par les personnes appropriées et sont approuvées par le code.*
21. *S'assurer que toutes les exigences d'encadrement , si nécessaire , ont été achevés au code du bâtiment et ne posent pas de problèmes structurels.*
22. *Il est REQUIS que ce produit soit branché dans une prise électrique protégée par un disjoncteur de fuite à la terre (GFCI) pour se protéger contre les chocs électriques, les incendies et / ou les blessures. Le non-respect de cette consigne annulera toute garantie de ce produit.*
23. *Seules les personnes qualifiées doivent tenter de réparer le produit. Le retrait des capots peut vous exposer à de hautes tensions et d'autres situations dangereuses.*
24. *Ne surchargez pas les prises de courant ou les rallonges. Une surcharge peut causer un incendie ou un choc électrique.*
25. *Fermer surveillance d'un adulte est nécessaire lorsque tout appareil est utilisé par ou près des enfants.*
26. *Ne pas utiliser un produit avec un cordon ou une fiche détériorés fonctionner après un mauvais fonctionnement de l'appareil ou a été endommagé d'une manière quelconque.*
27. *Pour débrancher électriquement le produit, éteignez le produit , puis retirez la fiche d'alimentation électrique de la prise.*
28. *Ce produit Séura est destiné à un usage intérieur et extérieur.*
29. *Si vous remarquez de la fumée ou une odeur de brûlure à proximité du produit, débranchez le cordon d'alimentation et consultez un personnel qualifié pour le service et / ou la réparation.*
30. *N'utilisez ni ne placez aucune substance combustible ou inflammable à proximité du produit.*
31. *N'utilisez pas ce produit pour un usage autre que celui prévu.*
32. *Ce produit est résistant à l'eau. Ne pas plonger ce produit dans l'eau.*
33. *Le système de distribution par câble doit être mis à la terre (mise à la terre) conformément à la norme ANSI / NFPA 70, le National Electrical Code (NEC), en particulier la section 820.93, Mise à la terre du blindage conducteur externe d'un câble coaxial.*

# The screen is most optimally viewed at ambient temperatures of 32°F to 122°F

**Operation and Storage Requirements**

The maximum ambient temperature range for operating the device is -40°F to 140°F*. The screen is most optimally viewed at ambient temperatures of 32°F to 122°F. Do not install the device in the proximity of heat sources, such as heating pipes, heaters, furnaces or other devices that radiate heat. To prevent fire or electric shock, never allow liquids to enter the unit. The uninstalled product must be stored in dry and well ventilated rooms, without extreme temperature fluctuations. Heat sources and aggressive active substances may not be stored in the proximity of the device. The required storage temperature is -40°F to 140°F at an air humidity of 10 - 90% RH non-condensing. The device must be stored in the complete packaging, as delivered. The product must not operate on average more than twelve (12) hours per day on a permanent or extended periodic basis. The product must have proper, correct and sufficient AC supply voltage.

**When the unit is used in temperatures below the ideal operating temperature range, the picture may appear slightly delayed or blurred. This is normal, and the picture will return to normal after the temperature increases to the ideal operating temperature range.**

**Séura Full Sun Series TVs are the only outdoor TVs with internal fans that actively heat and cool the electronics, a feature necessary for controlling the internal TV temperature in environments from -40° F to 140° F. The fans are performing as designed when creating a low-level hum when activated. Séura's cooling system volume specification is <40dB from 1 meter away from TV, with thermostatically control and modifiable control curve. The fan speed will increase in hotter temperatures in order to keep the TV cool. Fan speeds, as a percentage with 100% = full speed, at various TV temperatures are approximately: 104F = 26% 113F = 58% 122F = 89% 131F = 100%**

*Installation in sunlight reduces the maximum permitted air temperature.

IMPORTANT

The display should not be installed directly over a flat surface if heavy or driving rain may puddle and splash up onto the lower portion of the display. Direct sunlight on the display screen will heat internal components and should be avoided.

*IMPORTANT*

*Le moniteur ne doit pas être installé directement sur une surface plane, si de fortes pluies ou de conduite peut flaque d'eau et éclabousser sur la partie inférieure du moniteur. Lumière directe du soleil sur l'écran du moniteur va chauffer les composants internes et devrait être évitée.*

# Get to know your Séura® Full Sun Series™ Outdoor Display

If you have questions, call Séura at 1-800-957-3872 to speak to a design expert.

**Selecting the Installation Location**

Installation over a gas fireplace is acceptable if the distance from the heat source is such that the air temperature surrounding the display does not exceed the maximum operating temperature. A mantle or other heat shield is recommended to further protect the display from heat. Installation over a wood fireplace or near heaters or blowers is not recommended and may result in damage to the electronics. If you have questions about your situation, you may call Séura at 1-800-957-3872 to speak to a design expert.

Not for installation in a sauna or directly above a hot tub where extreme heat and steam could damage the electronics.

**Ventilation**

Adequate ventilation must be maintained to ensure reliable and continued operation and to protect the display from overheating. There must be **at least 1.5 inches of space on all sides**. Do not install inside a cabinet, kiosk, or other enclosure.

**Cable Management**

When running cables from inside the compartment to the sources, allow adequate spacing at the foam entry to the cabinet that allows the foam seal to completely surround each cable. Bunching the cables together can create gaps in the foam that allows moisture and insects to enter the cabinet that may result in damage.

When running HDMI cables longer than 30 feet, check your cable specifications. HDMI cables loose signal over long distances and your media setup may require a signal booster or HDMI balun.

Once connections are made, the media compartment cover must be secured. Failure to close the media compartment exposes the ports and components to the elements and has the potential to permanently damage electronics.

**Screen Health**

The 4K liquid crystal panel is a high technology product with 8,294,400 pixels, giving you fine picture details. Occasionally, a few non-active pixels may appear on the screen as a fixed point of blue, green or red. Please note that this does not affect the performance of your product. Pixel errors outside of Séura's specified and permitted area are covered under Séura's limited product warranty. Please inquire directly with Séura Technical Support regarding Séura's Pixel Policy.

# Meet Séura® 80W Outdoor Soundbar

Photo (katy)

## In the Box

Power Cable
(pre-installed to soundbar)

3.5mm RCA Cable
(pre-installed to soundbar)

Resource Information

## VESA/Display Mount

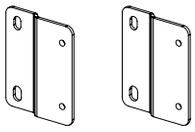

(2) Brackets

(8) Bracket Bolts
with Washers
M5 x 10mm

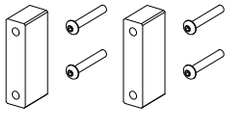

(4) Spacer Blocks
and Extended Bolts
M5 x 35mm
(Storm Ultra Bright Only)

(4) VESA Bolts
M6 x 16mm

(4) VESA Bolts
M8 x 16mm

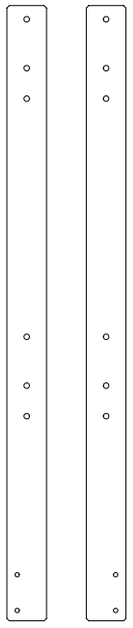

30.5” Vertical Bars
(SPK-49, SPK-55,
SPK-65 Models)

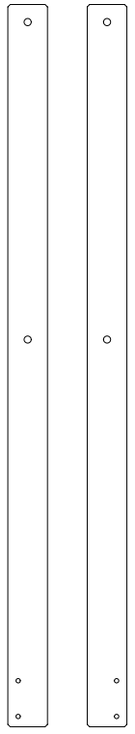

36” Vertical Bars
(SPK-86 Only)

## Wall Mount

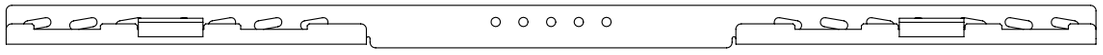

Wall Mount Bar

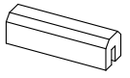

Wall Mount Block

# Parts

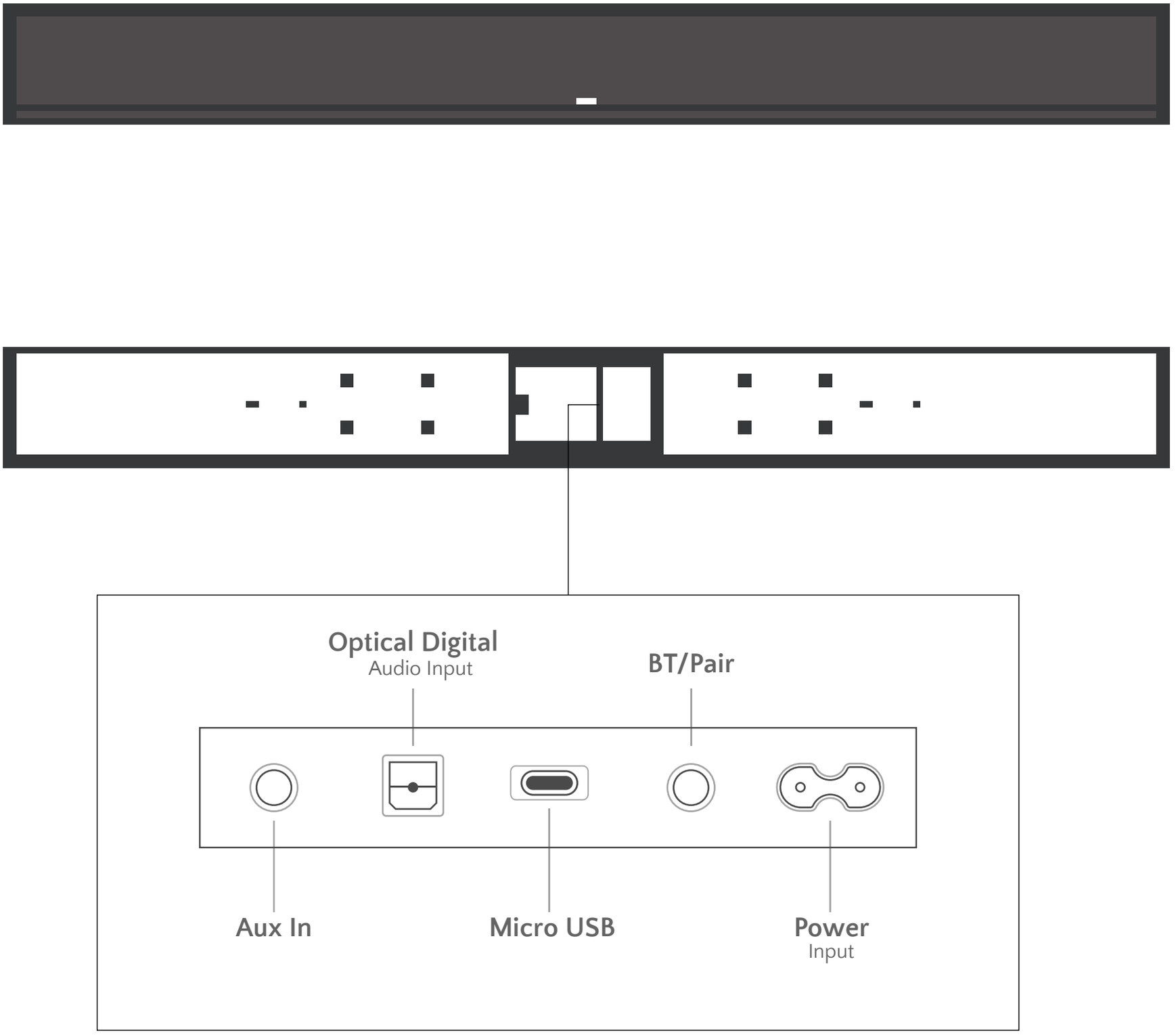
Optical Digital
Audio Input
BT/Pair
Aux In
Micro USB
Power
Input

## Vesa/Display Mount Instructions

1. Carefully lay the display face down on a non-marring surface. Position the soundbar face down, with the grill attached, along the desired edge of the display. This will help ensure that the final mounted position of the soundbar is flush/even with the display.

**WARNING: Ensure the Séura Display is properly supported on a flat surface at least as large as the Display. Pressure on the front of the LCD panel will damage the unit.**

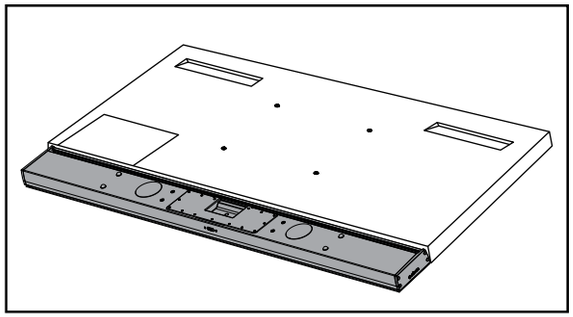

2. For Storm Ultra Bright Displays, use the included spacer blocks and longer hardware to accommodate the additional width of the display. For Storm Displays, use the brackets without the spacer blocks for a flush fit.

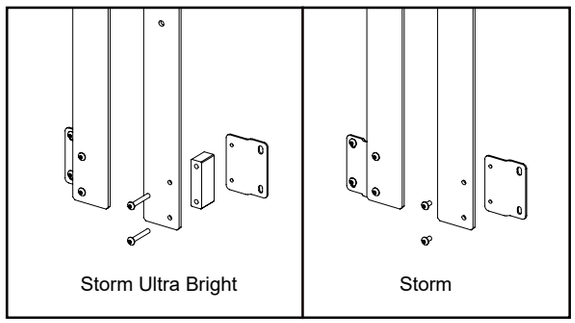


3. Attach the bracket to the selected vertical bars using the included short bolts. Attach vertical bars to the soundbar.

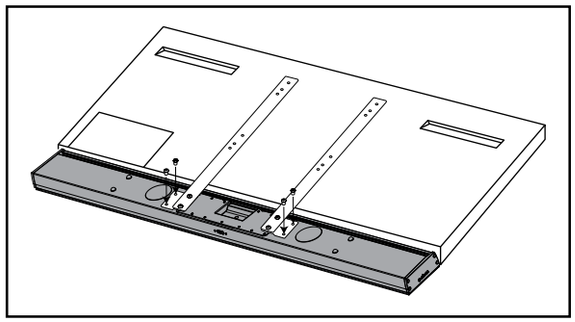

4. Attach the VESA mount to the display via the display VESA pattern and the soundbar mount bars according to the mount instructions.

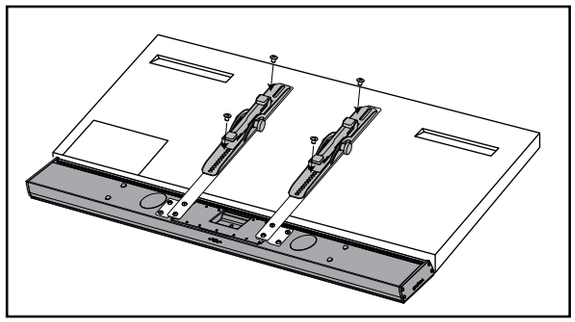

## Wall Mount Instructions

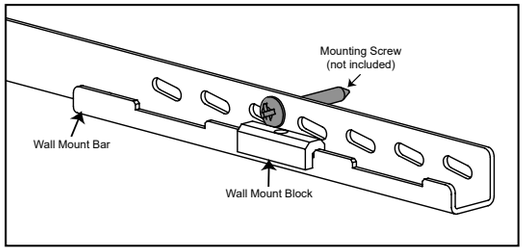


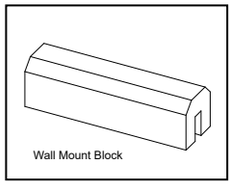


1. Mount the wall mount bar to the wall using appropriate screws. Make sure the bar is installed level with the display. When installed, the top of the soundbar will sit approximately 3/8” higher than the top edge of the wall mount bar. The bottom of the soundbar will be approximately 5.75” below the top edge of the wall mount bar.

2. Place one wall mount block on either side of the bar, making sure the set screw is centered in the block prior to placing it on the bar. Each block should be placed in the recess just to the outside of the mounting screw for that side of the bar. The soundbar will rest on these blocks when installed and a wider placement gives the soundbar more stability. Placing the blocks too far from the mounting screws may allow the bar to bend.

3. Place the soundbar on the wall mount, taking care to not disturb the wall mount blocks. It may be necessary to level the soundbar slightly if mounted very close to the display. To adjust, shift the bar slightly to the right or left, using the angled slots to level.

## Connecting your Soundbar

Connect any line level audio input to the RCA connectors.
The Soundbar uses an auto detection feature to determine which RCA input is active.

## Waterproofing Inputs

Included are input caps for the back of the Soundbar. To ensure proper operation in all weather conditions, these caps must be used to cover any exposed connections not in use.

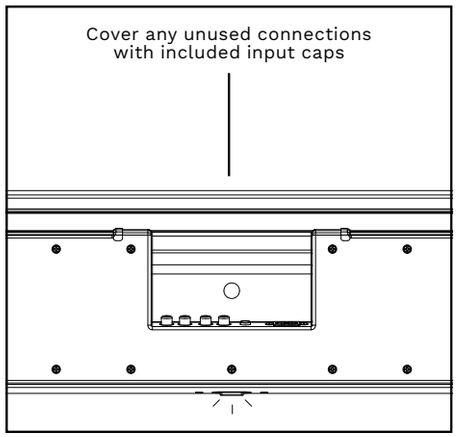

## Powering On Your Soundbar

To power on your Séura soundbar, remove the magnetic grill from the front of the soundbar. Press the power switch in the center of the soundbar. The side with the line should be depressed to power on.

When powered on, the indicator light will turn on but will turn off 5 minutes later.

To power off your Séura Soundbar, press the rocker switch so that the side with the circle is depressed. Powering off your Soundbar is recommended if not in use for long periods of time.

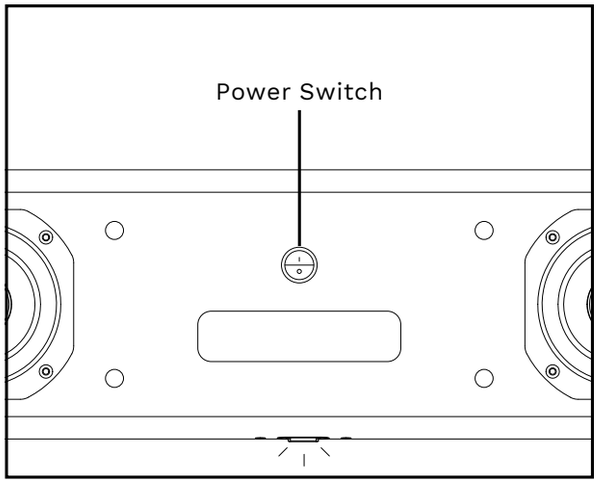

# Caring for your Séura® Full Sun Series™

While Full Sun Series may be safely exposed to weather and moisture, the use of a Séura Outdoor Cover when not in use is recommended.

### Transporting the Display

When transporting Full Sun Series, never carry it by holding or putting pressure on the screen. Screen pressure may damage the LCD or weaken the waterproof seal. Be sure to always transport with two people supporting it with both hands.

### Caring for the Screen

To clean the screen, gently wipe the surface of the front panel with a clean, soft and lint-free cloth. If needed, dampen the cloth with distilled water or isopropyl alcohol and lightly wipe the screen. Do not use force as pressure on the screen may damage the LCD or weaken the waterproof seal. Do not use solvents or chemical cleaners as they may damage the screen. Do not use a garden hose or pressure washer on the display.

### Caring for the Cabinet

Clean regularly with a clean, soft and lint-free cloth. Do not use a chemical cloth (wet/dry sheet type cloth). Use a mild detergent, isopropyl alcohol or multi-use cleaner to remove dust and debris. Stubborn stains such as mineral water deposits may be removed with a calcium or lime remover such as CRL®. However, DO NOT allow CRL® to touch the LCD screen as it will distort the surface. Cleaning with an abrasive cloth or using strong force may scratch the surface of the cabinet. Do not apply insecticides or other volatile liquids.

Use of a Séura Outdoor Cover when not in use is highly recommended to protect your display. Do not allow the cabinet to remain in contact with rubber or vinyl products for a long period of time. Plasticizers inside the plastic may cause the cabinet to deform and cause the paint to peel off.

# Troubleshooting

If the product is not working properly, please check the following troubleshooting solutions before you contact customer service:

| Challenge | Possible Solution |
|---|---|
| **Will Not Power Up** | • Make sure to check that the AC power cable is connected to an outlet and the display<br>• Make sure that the power outlet is receiving power<br>• Try pressing **POWER** button on the display to make sure the problem is not the remote.<br>If the display turns on, refer to 'Remote control does not work' troubleshooting guide. |
| **Remote Control Not Working** | • Make sure that there is known working batteries in the remote and in the correct polarity<br>• Make sure there are no obstacles in between the IR receiver and the remote (ex. sunlight or tape)<br>• Try pointing the remote directly at the display from 5 feet away. |
| **Signal Issue** | • Check cable connections to ensure they are connected.<br>• Plug the video source directly into the display which will remove any potential issues associated with an extender or matrix switch device. (if applicable)<br>• Replace cables with known working cables.<br>• Make sure the connected devices are powered ON.<br>• Make sure that the source is on the correct **INPUT.**<br>• Power cycle the video source device by unplugging the device and plugging the device back in. |
| **No Sound** | **Soundbar**<br>• Make sure your cables are connected properly<br>• Make sure the display is not on **MUTE** / turn up the volume.<br>• Make sure the soundbar is connected to the power supply<br><br>**External Sound System**<br>• Make sure your cables are connected properly<br>• Make sure the display is not on MUTE / turn up the volume.<br>• Make sure the Digital Audio Settings within the display is not set to **OFF**<br>• Test the external sound system with another device to ensure that it is working. |

For additional technical support, please contact Séura at **1-800-957-3872**
during regular business hours: M-F 8:00 am - 4:30 pm, Central Time.

## Control Documentation

To access current control documents, please visit **www.seura.com/download-center**

## LIMITED PRODUCT WARRANTY

For information regarding Séura's warranty policy, please visit our website: www.seura.com/warranty. If the current Séura warranty policy is after your product purchase date, please contact Séura Customer Support to request warranty documentation from the date of your purchase.

For additional customer support, please contact Séura.
Toll Free: 1-800-957-3872 (Monday - Friday 8:00 am – 4:30 pm, Central Time)

Website: www.seura.com/support

For responsible recycling information, please contact Séura or visit the following URL:

https://www.seura.com/support/recycling/

SÉURA®

1230 Ontario Road  Green Bay, Wisconsin 54311
1-800-957-3872  contacts@seura.com
www.seura.com

Publish date: November 19, 2021
Information is subject to change without notice.

© 2021 Séura