Installation instructions

Specifications:

Model No.	Input Voltage /Frequency	Power	Max Input Current	Weight
ZK2-A600-SR01/A	100-277V 50/60Hz	553W	6.1A	11.8KG

Important Safety Instructions:

CONDUCTOR

DO NOT STARE AT OPERATING LAMP. MAY BE HARMFUL TO THE EYES.

Pre-Installation:

1、Before installation and maintenance, please cut-off power, turn off water.

2、For safety, please hire professional electrician and plumber to perform the installation and maintenance of the light, wiring and water cooling system. Do

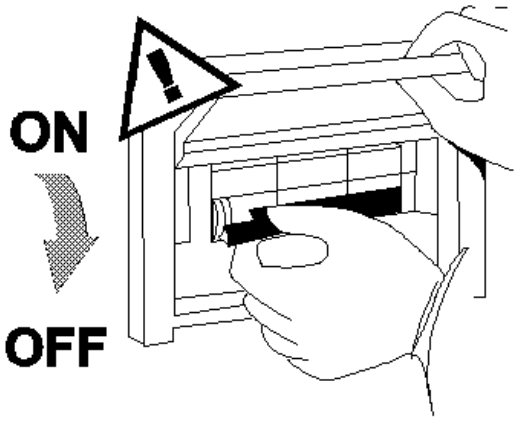

not modify or switch parts.

Accessories：

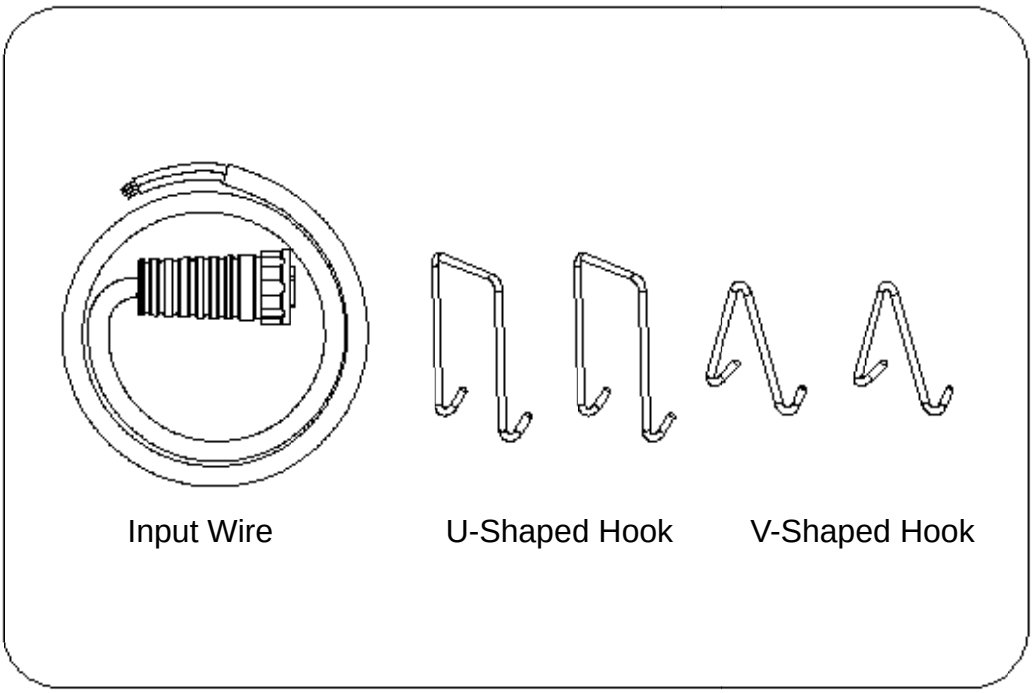

Installation：

According to the roof structure in your facility

1. Hanging on the Beam

Step 1：The weight of light itself is 14Kg, Please verify the weight bearing capacity of the beam is sufficient, the width of the beam is less than 60mm. Hang two U-Shaped Hook on the beam:

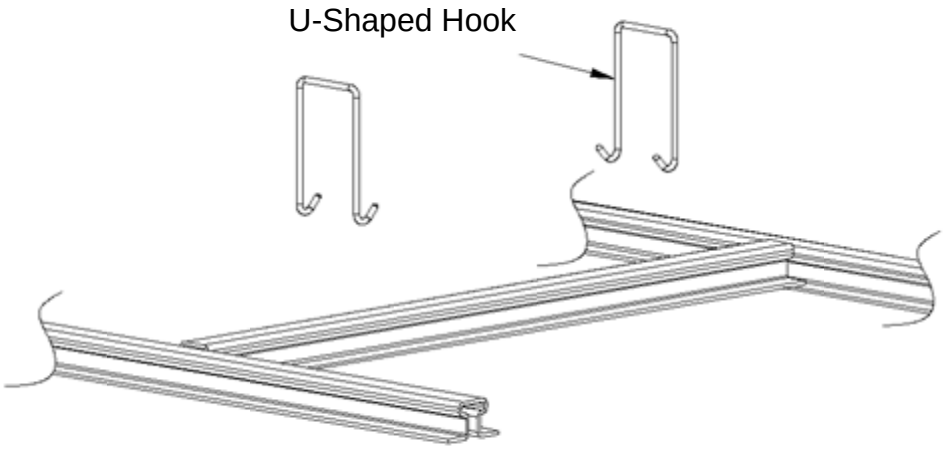

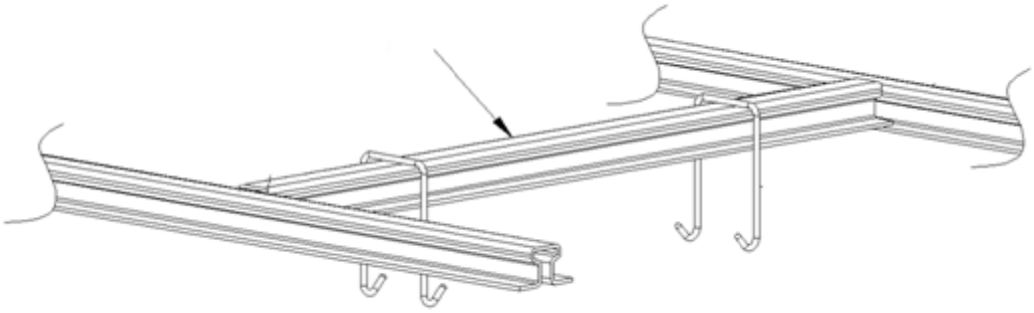

Step 2：Pull up the Hanging Plate at both side of the light, as shown below:

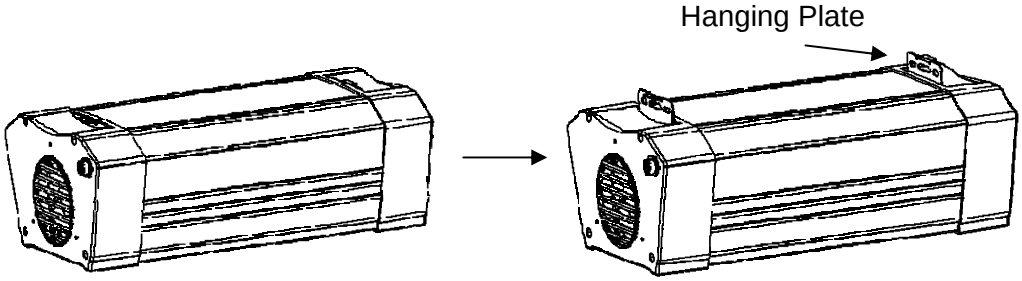

Step 3：Lift the light, hook the holes on the Hanging Plate to the U-Shaped Hook. Position the light horizontally.

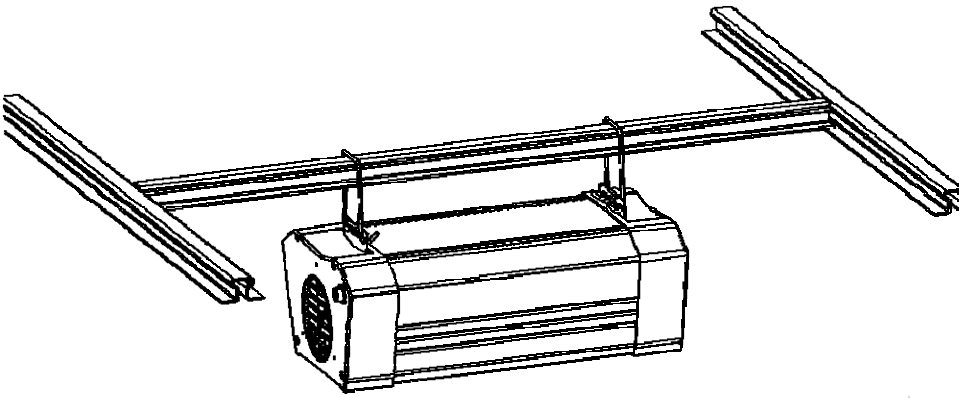

Step 4：Properly align the connector on the M19 power cord with the connector on the light, push it in then tighten the cover appropriately.

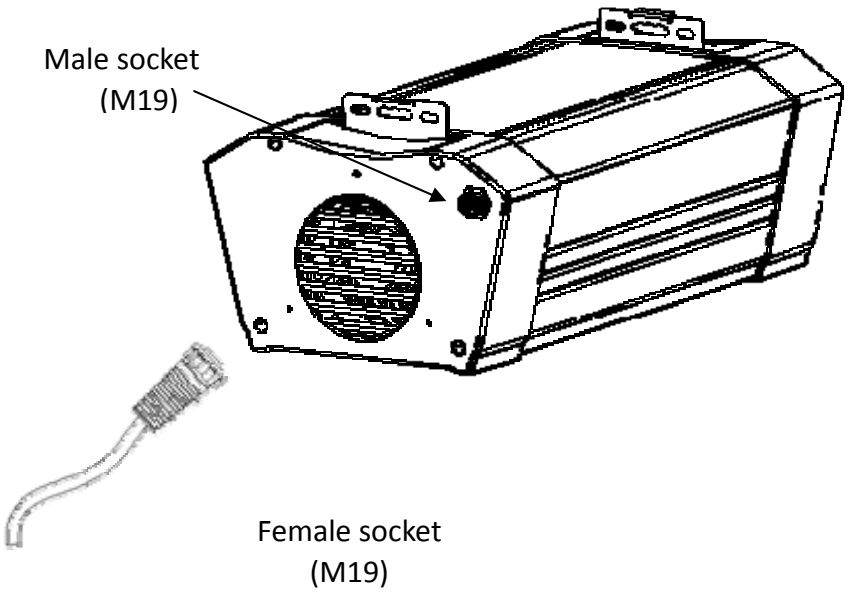

2、Please acquire appropriate steel strings and other accessories to ensure sufficient weight bearing capability. Suggest to use steel string with at least 1.5m~2.0mm in diameter, at length according to your need.

Step 1：Install your steel string(These do not belong to product accessories).
Step 2：Hang two V-Shaped Hook on the steel string.

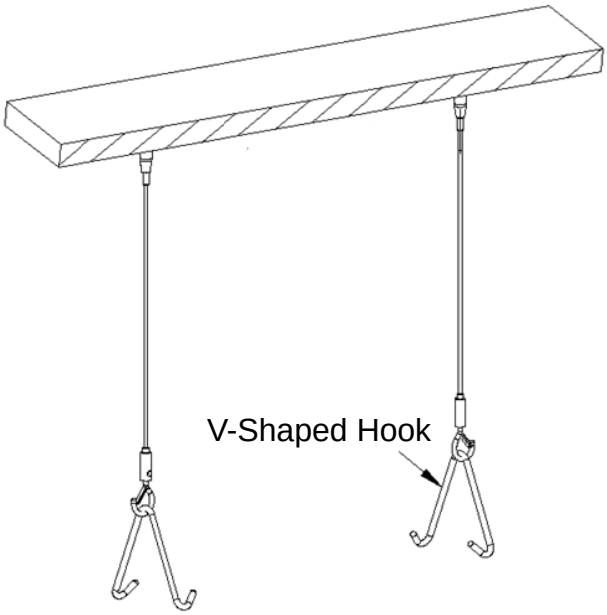

Step 3：Pull up the Hanging Plate at both side of the light, as shown below:

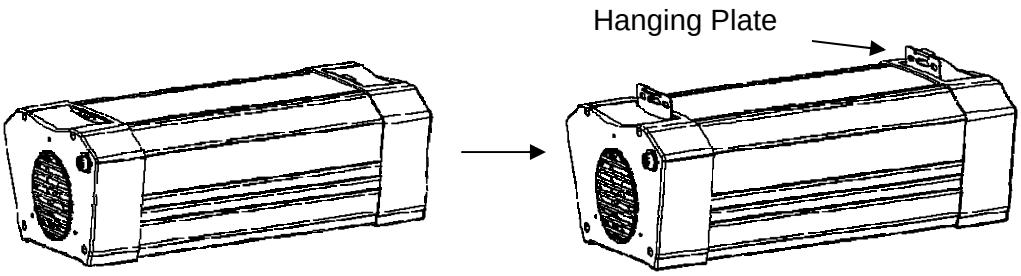

Step 4：Lift the light, hook the holes on the Hanging Plate to the V-Shaped Hook. Position the light horizontally

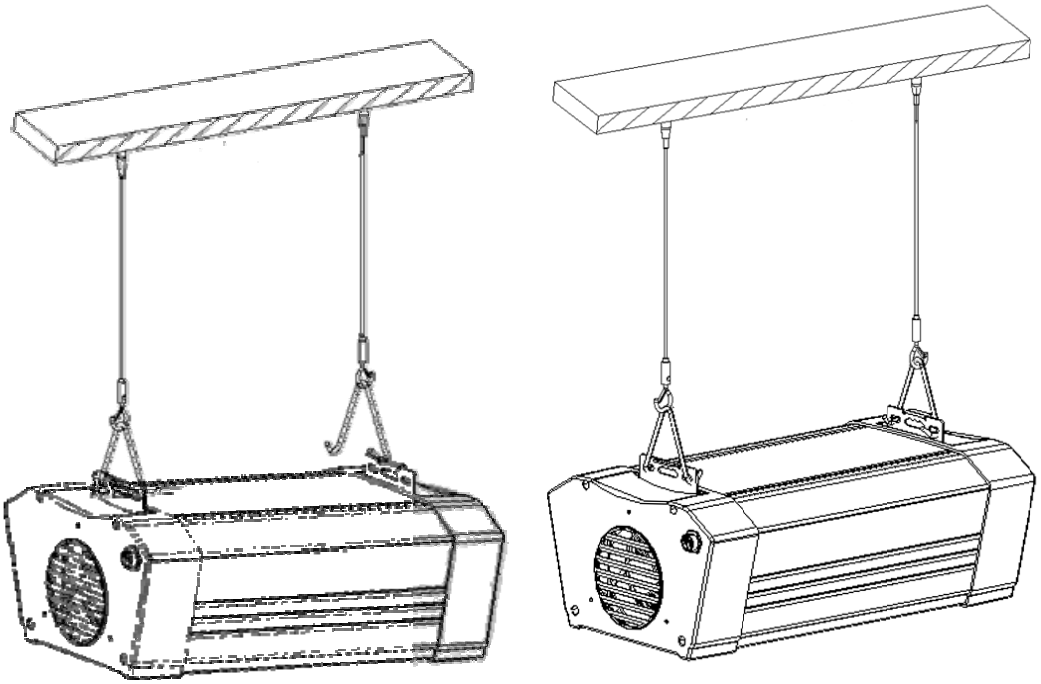

Step 5：Properly align the connector on the M19 power cord with the connector on the light, push it in then tighten the cover appropriately.

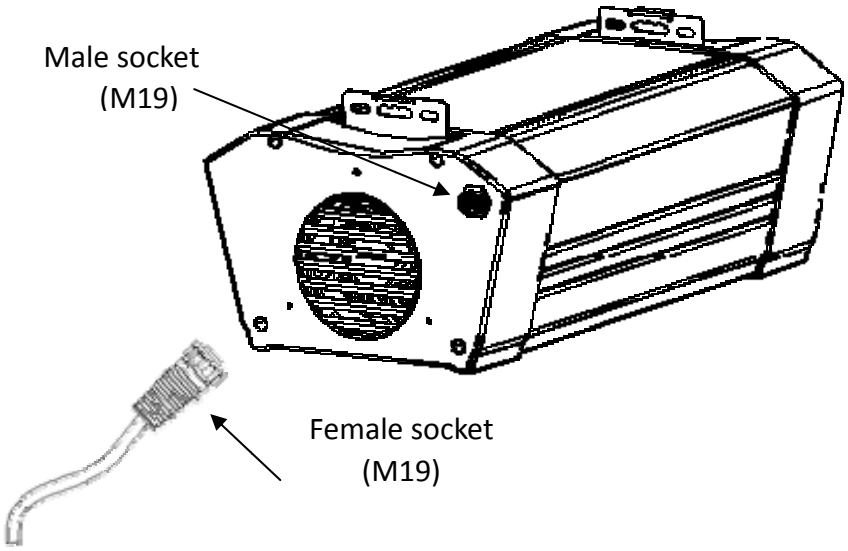

After Installation:

Verify the installation is correct, turn on the power for testing and normal use.

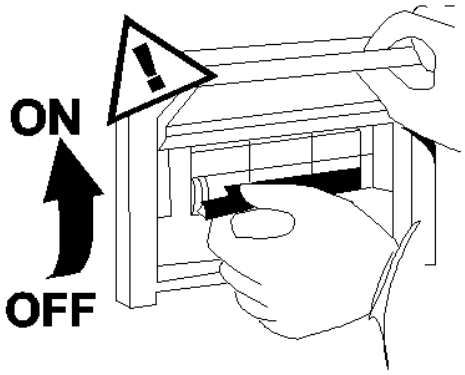
ON
OFF

Installation instructions

Specifications:

Model No.	Input Voltage /Frequency	Power	Max Input Current	Weight
ZK2-W600-SR01/A	100-277V 50/60Hz	538W	6A	11.5KG

Important Safety Instructions:

CAUTION – RISK OF FIRE

CONSULT A QUALIFIED ELECTRICIAN TO ENSURE CORRECT BRANCH CIRCUIT CONDUCTOR

DO NOT STARE AT OPERATING LAMP. MAY BE HARMFUL TO THE EYES.

Pre-Installation:

1、Before installation and maintenance, please cut-off power, turn off water.

2、For safety, please hire professional electrician and plumber to perform the installation and maintenance of the light, wiring and water cooling system. Do

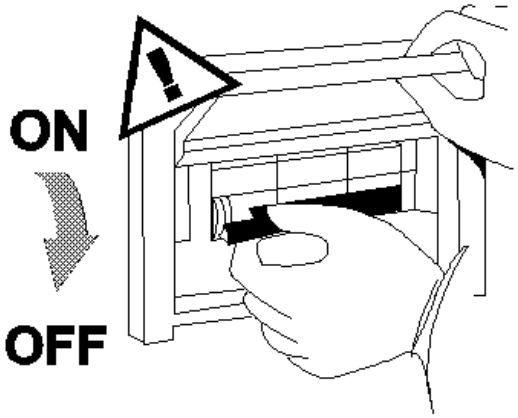

not modify or switch parts.

Accessories：

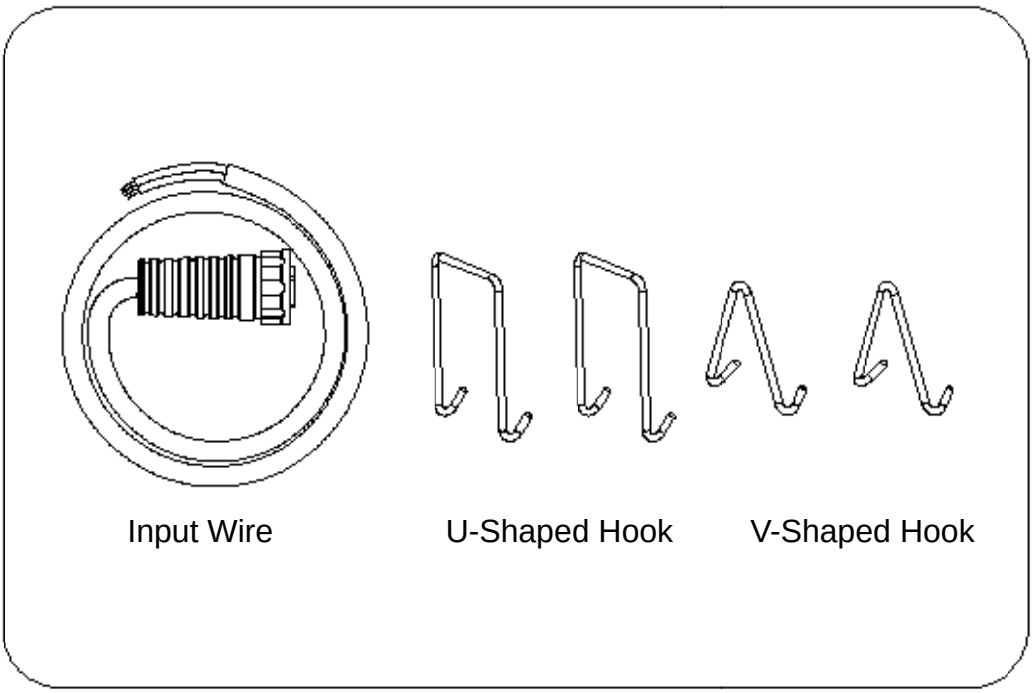

Installation：

According to the roof structure in your facility

1. Hanging on the Beam

Step 1：The weight of light itself is 14Kg, Please verify the weight bearing capacity of the beam is sufficient, the width of the beam is less than 60mm. Hang two U-Shaped Hook on the steel bracket:

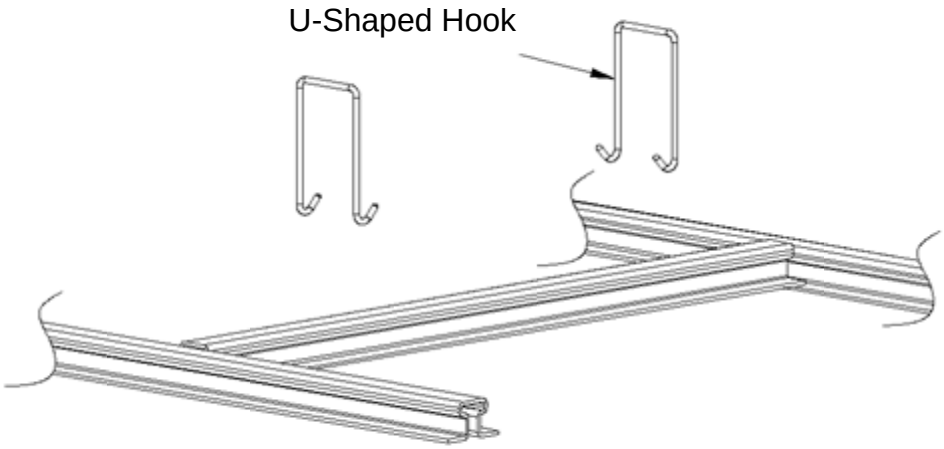

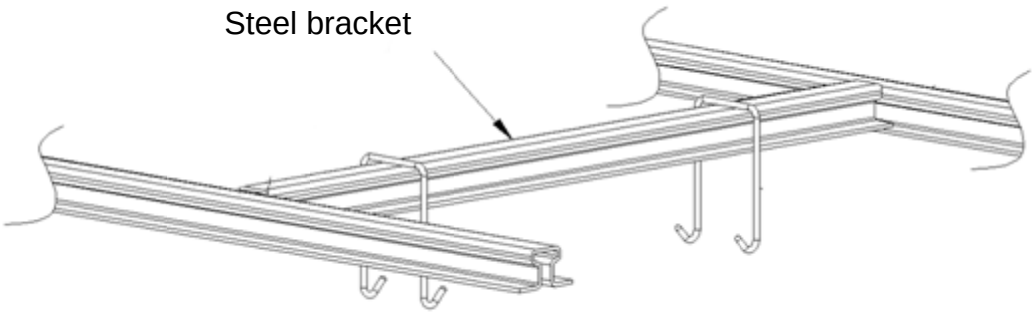

Step 2：Pull up the Hanging Plate at both side of the light, as shown below:

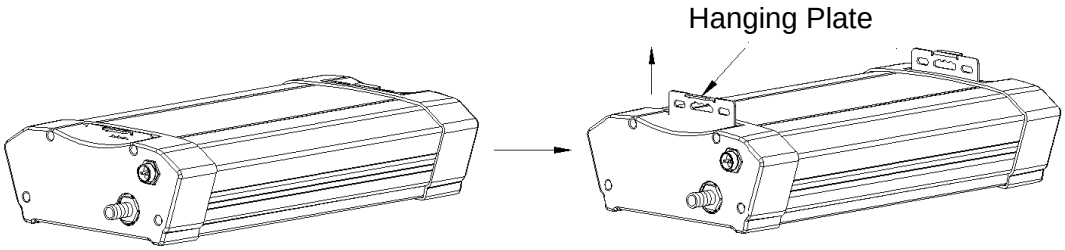

Step 3：Lift the light, hook the holes on the Hanging Plate to the U-Shaped Hook. Position the light horizontally.

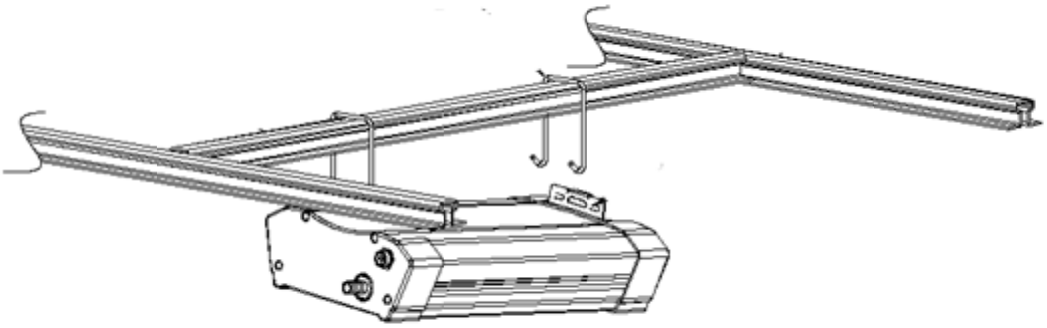

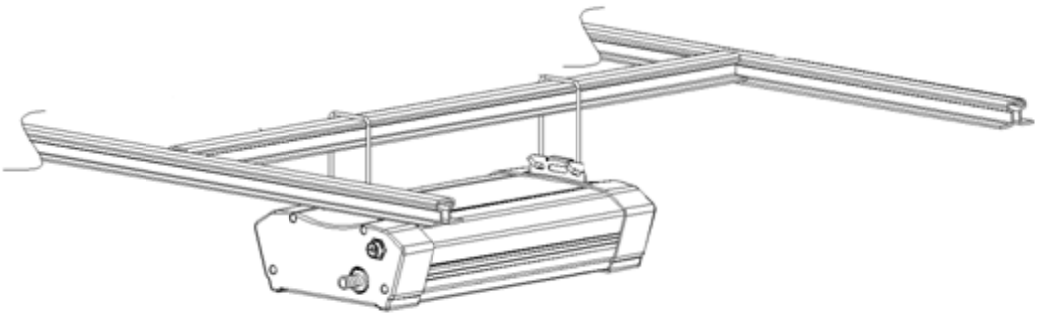

Step 4：Properly align the connector on the M19 power cord with the connector

on the light, push it in then tighten the cover appropriately.

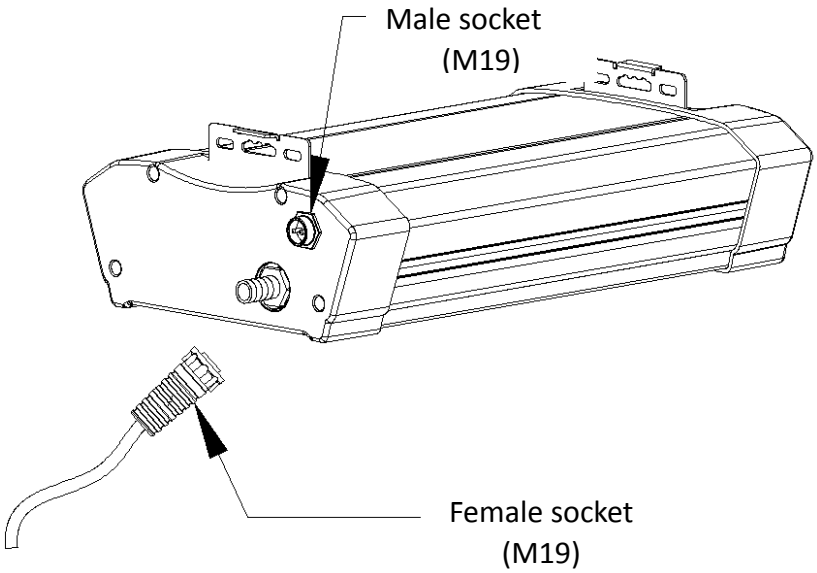

2、Hanging by Steel String

Please acquire appropriate steel strings and other accessories to ensure sufficient weight bearing capability. Suggest to use steel string with at least 1.5m~2.0mm in diameter, at length according to your need.

Step 1：Install your steel string(These do not belong to product accessories).

Step 2：Hang two V-Shaped Hook on the steel string.

Step 3：Pull up the Hanging Plate at both side of the light, as shown below:

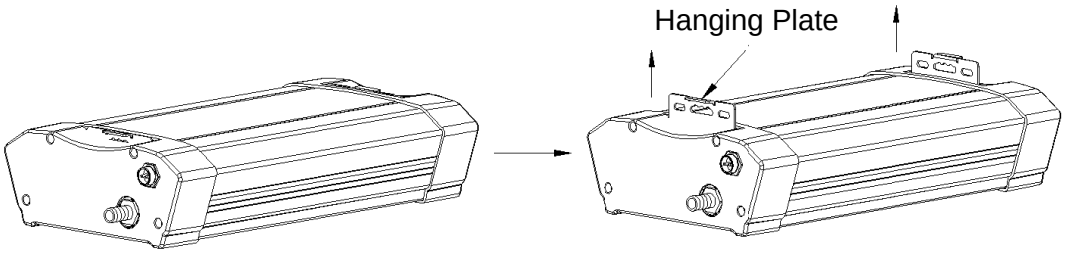

Step 4：Lift the light, hook the holes on the Hanging Plate to the V-Shaped Hook. Position the light horizontally

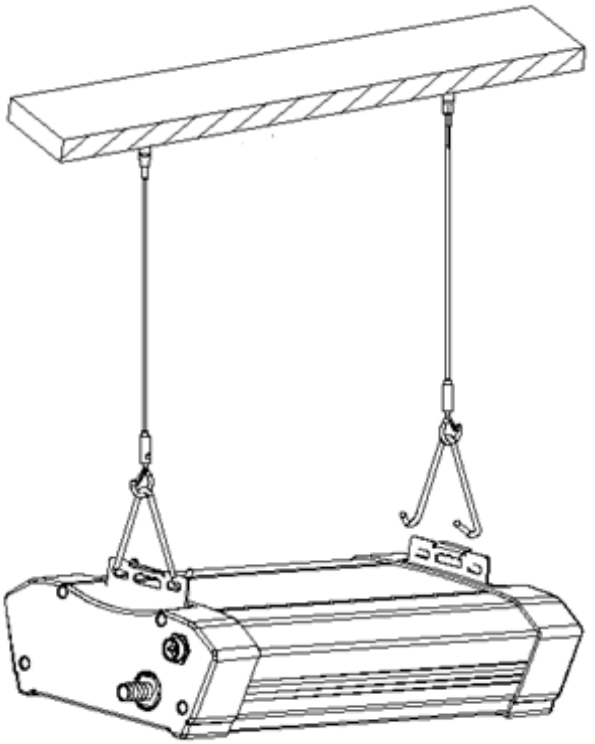

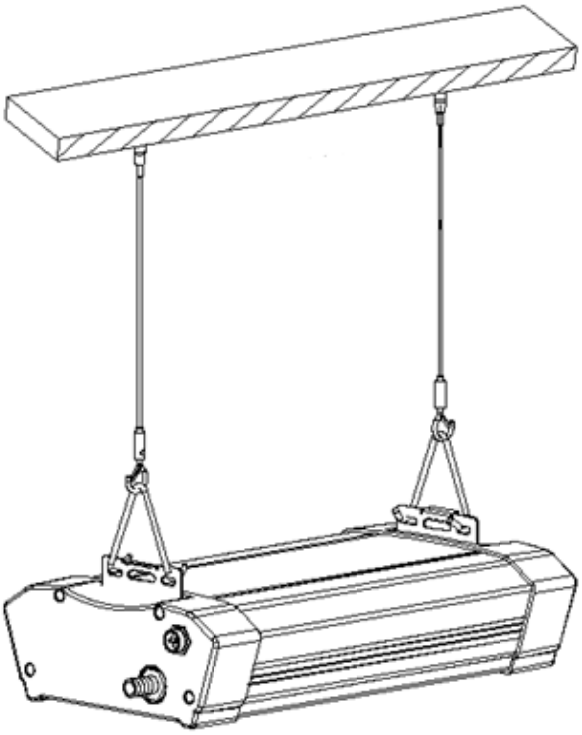

Step 5：Properly align the connector on the M19 power cord with the connector on the light, push it in then tighten the cover appropriately.

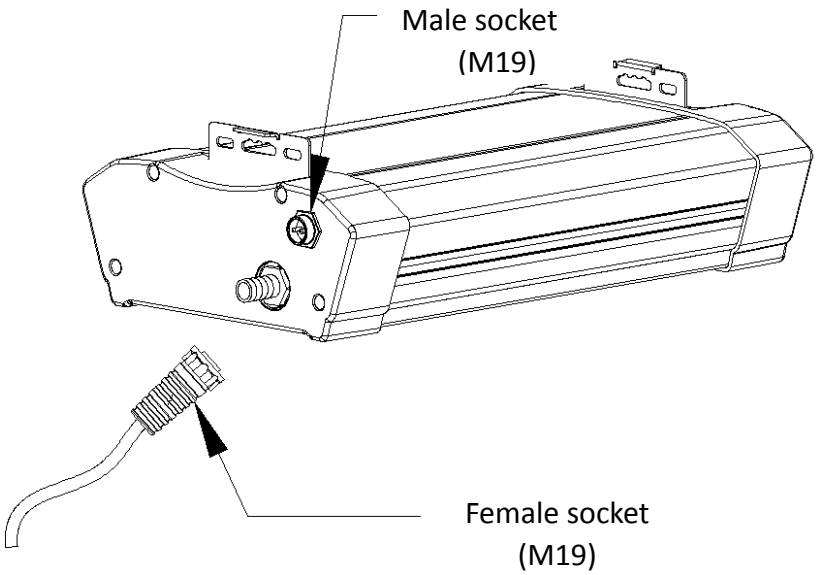

After Installation:

Verify the installation is correct, turn on the power for testing and normal use.

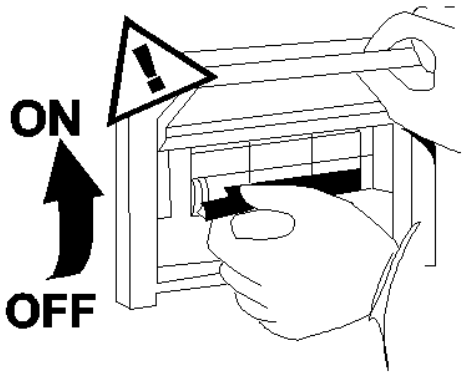

Cooling system installation：

Step1: Choose any end as a water inlet(Suggest choosing the same end of the power input end).Connect 4” flexible pipe to the water inlet.

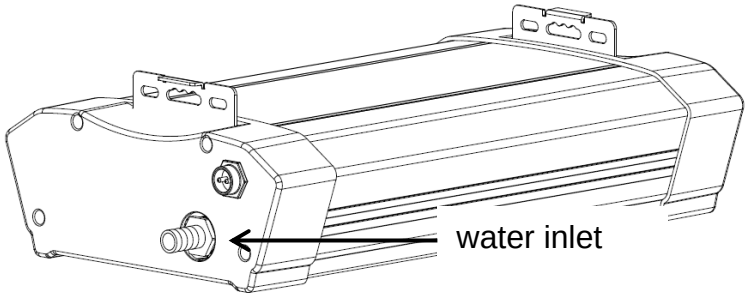

Step2: Strengthen the connection with a coupling.

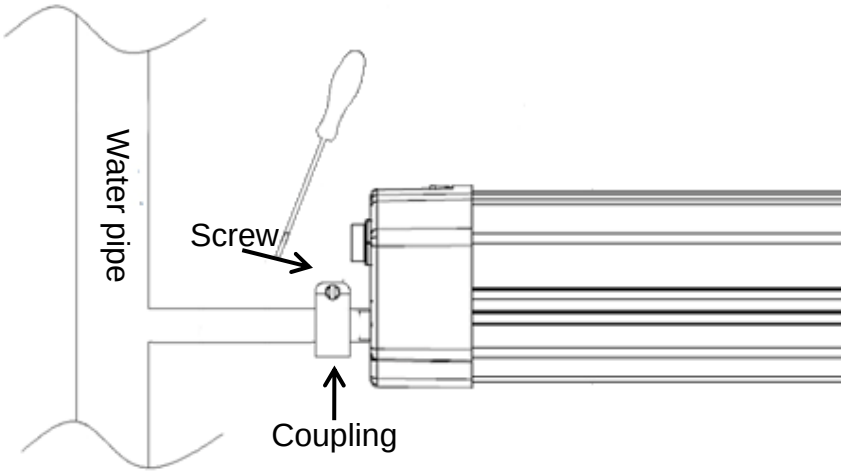

Step3: Reference to the step1&step2,connect 4” flexible pipe to outlet.
Step4: Set up the inlet water temperature less than 45℃.
Step5: Set up the flow rate more than 5L/min.

Android System

User Manual

1. Design purpose

Achieve intelligent control of high power plant lights

2. Scope of application

Android development (priority), ISO development

3. Functional Description

1) Lamp List

a) Display the luminaires in each group

b) Grouping fixtures

2) DIM

a) Corresponding grouped lighting batch dimming settings
b) Dimming mode setting

3) SCHEDULE

a) Add, delete, modify policies

b) Timing control of switching and dimming of grouped luminaires

4) INFO

a) Temperature display of each fixture in the group

b) Temperature alarm

c) Fan on status display

4. Function introduction

A. All of the following operations are based on the premise that the mobile phone is connected to the MB880 wireless network;

B. Mobile phone installation APP

Android mobile phone system APP: The company will provide the app's apk format installation package;

4.1 Lamp List

4.1.1 register

1、 Click the icon "+" in the upper right corner. In the pop-up drop-down menu, click the "Match" control.

2、 Power on the lamp module that needs the control

3、 Open the mobile app and refresh the “Lamp List” page on the homepage. In the “UN-G” group, the light list will appear, that is, the registration light is successful; as shown below:

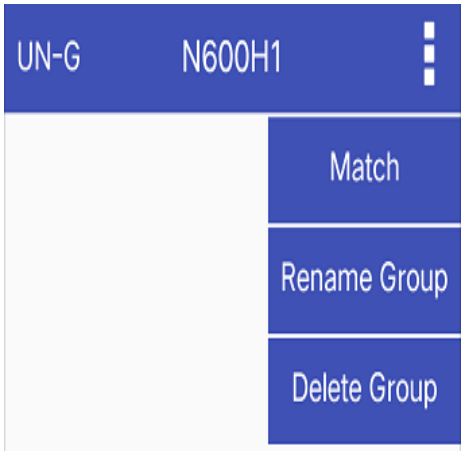

Figure 1 Registration

Note: Registering all lights to the MB8800 router is the first step. All the following operations are based on this step. If you do not register the lamp to the MB8800 router, the following operations will not be possible; if the registration is successful, you can operate the mobile APP. All controls;

Menu

1、 Open the mobile app and click the “UN-G” control in the upper left corner of the “Lamp List” page on the home page. The drop-down menu for all group lists appears. The default group list includes three items, namely “UN-G”, “G1”, “+”. , these three items are explained as follows

- UN-G: Ungrouped, that is, when the light has just been registered, it will be automatically assigned to the ungrouped interface. Grouping, deletion, group renaming and other operations cannot be performed on ungrouped luminaires.
- G1: the first group, and the group name is "G1"
- +: New groups, including G1 groups, can only add up to 10 groups and

the group name must not exceed 4 bytes;

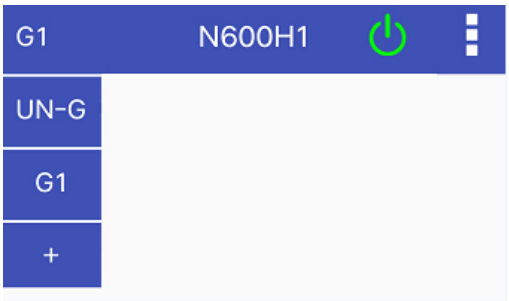

Figure 2 group menu

4.1.2 + (multi-function list)

1、 Open the mobile app and click the “+” control in the upper right corner of the “Lamp List” page on the home page. Multi-function drop-down list, the drop-down list contains the following items: Match, Rename Group, Delete Group, as shown in Figure 1:

2、 Match：Click the “Match” button to power on and off the luminaire, register the lamp to the router and jump to the ungrouped page, as described in 4.1.1 above;

A、 Rename Group：Click“Rename Group” button，Rename the luminaire group；
For example: when the group name of the group is "123", click the "Rename Group" button, rename the group name to: "12", click OK, the modification is successful;

B、 Delete Group：Click “Delete Group”button，There are 2 kinds of phenomena：

1） When the light is not grouped in “UN-G”, click the “Delete Group” button, the light will be deleted from the router, and the deleted light information will not be displayed in the APP;

2） When the light is in the group, that is, in “G1”, click the “Delete Group” button to delete all the lights in the current group and move all the lights in the group to the ungrouped list;
For example, there are 2 lights in the current G123 group. Click the “Delete Group” button. When the group is successfully deleted, move all the lights in the group to the ungrouped list. Click the ungrouped “UN-G” interface to view. ;

4.1.3 Lamp list

1、 Open the mobile app and click on the “Lamp List” page on the homepage to refresh the successful registration information in the light list.

For example, the information format of the light displayed in the light list is: T172600010 (LEDLIGHT)

- T172600010：SN number representing the lamp
- LEDLIGHT：Representing the name of the lamp, the following command is given to the lamp, which is the value of the change;

2、Select a light message and slide the menu to the left. The menu contains the following:

A. Rename: Give the light a command
Operation steps: Select a light name: T172600010 (dffgg), slide the menu to the left, click the “rename” control, rename the light to: T172600010 (1234), click “OK” to modify the success;
Steps：

B. Move to ： Move the light to another group；
Operation steps: Select one of the lights in the group "123" named: T172600010 (dffgg), slide the menu to the left, click the "move to" control, in the pop-up group list box, select the group "G1" and click "OK" "You can move the light to group "G1";

C. Delete

Steps: Select a light, slide the menu to the left, click the “delete” control to remove the light from the group and return to the ungrouped interface.

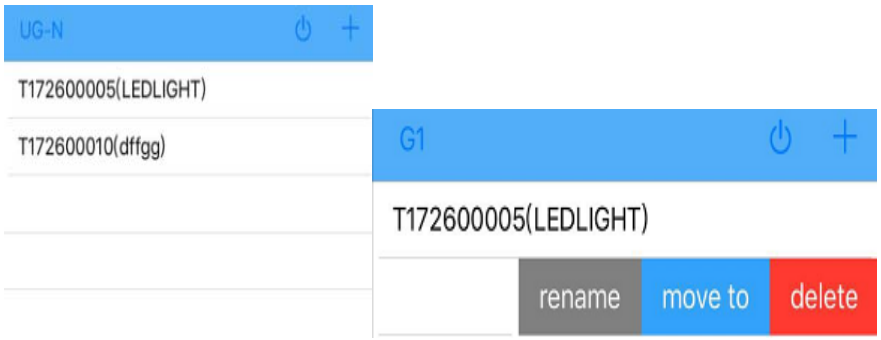

Figure 3 list of lamps

3、Select a light message and press and hold the light. Below the APP interface, the menu is as follows:

A、MOVE TO：Move the light to another group；
B、REMOVE：Remove the light from the group；
C、SELECT ALL：Multi-select button; as shown below:

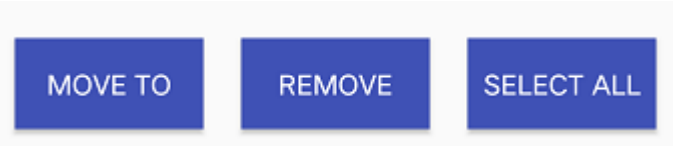

4.2 DIM

4.2.1 Dimming interface

1、Open the mobile app and click the “DIM” control to enter the light control interface. The dimming interface mainly has the following functions:

1) Dimming drag bar：
Slide the "dimming drag bar", the state of the lamp can change with the value of the dimming slide；

2) Channel name；
Long press the "Channel Name" dialog box, a dialog box for renaming the channel will pop up;

3) Dimming value
Long press the "dimming value" dialog box, the dialog box for inputting the dimming value will pop up; for example, when the value is 50, the brightness of the current lamp is 50;

4) The channel switch, the value is divided into ON/OFF, and the current switch state is controlled;

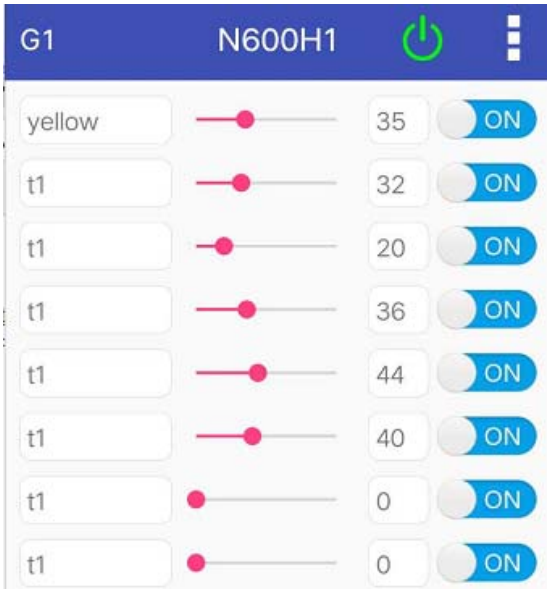

Figure 4 dimming interface

4.2.2 Immediate response switch

1、 When the Real-Time: ON state is clicked, click OK to respond to the dimming state.

2、 Real-Time: Cancel and OK buttons are hidden when OFF

Figure 5 instant response switch

4.2.3 Mode Selection Shortcuts

1、 There are four modes, A, B, C, and D. Select four modes, A, B, C, and D, and observe whether the display state of the lamp is the state set in the mode.

2、 the editing mode

1) Click “A” mode to enter the interface of mode A;
2) Click the “Edit” edit mode button in the upper right corner to pop up the edit box and modify the value;

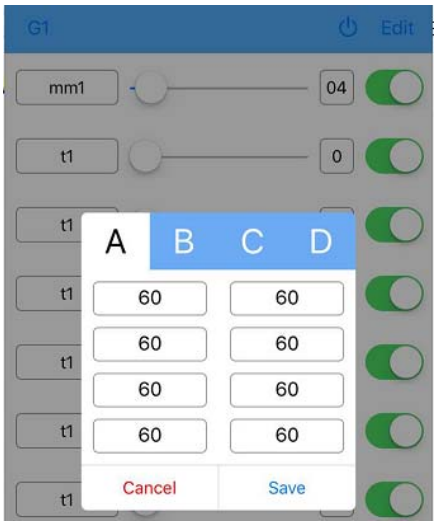

Figure 6 mode edit page

4.3 SCHEDULE

1、 Open the mobile app and enter the policy interface (SCHEDULE).

2、 Add a strategy：

Click the "+" control in the upper right corner to enter the Add Policy interface, which includes: mode, policy start date, policy end date (the end date cannot be today's date), policy execution time, and the brightness and color of the light when executing the policy;

3、 Editing strategy:

Long press on the added strategy, the interface will display: modify and delete the control;

1) Click “edit” to modify the control and enter the editing policy interface. The interface can modify the start date, end date, execution time and brightness and color of the light when the strategy is executed.

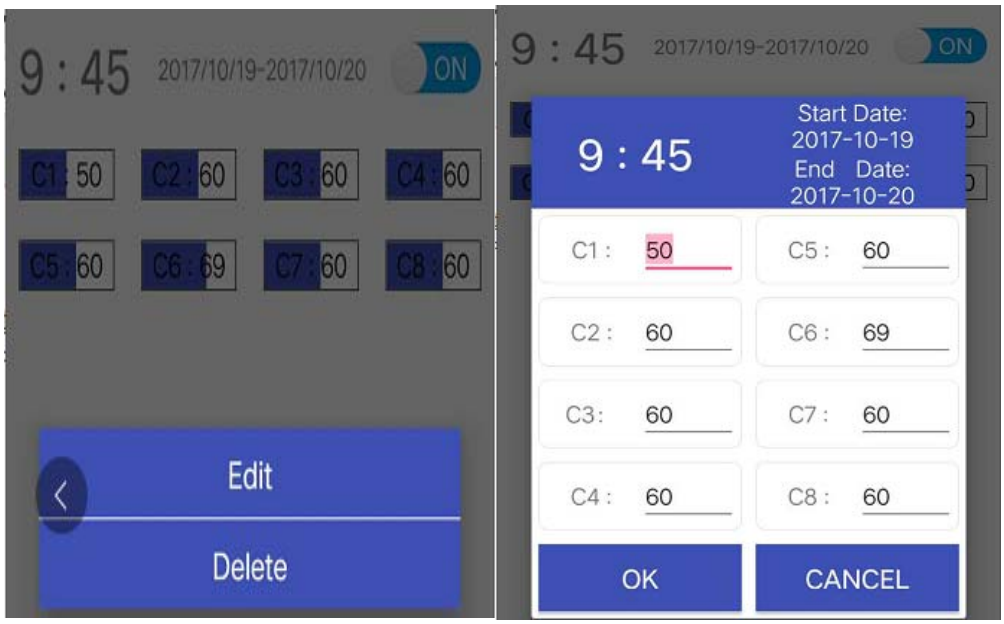

Figure 8 Modify Policy Interface

4、 Delete the strategy

Click "delete" to delete the control, you can delete the current policy;

4.4 INFO

The INFO interface mainly monitors the temperature of the lamp's fan switch. When the temperature of the lamp exceeds the set value, the module will automatically turn on the fan to cool down and the APP will display a temperature abnormal red alarm warning; as shown below:

Figure 9 Temperature monitoring

ISO System

User Manual

1. Software introduction

In order to realize the controllable and adjustable intelligent spectrum, the software was developed. The functions that the software can implement are as follows

a) Lighting group synchronization control

b) The maximum spectral intensity of 8-channel is adjustable from 0-100%

c) Intelligent time control of lamps, automatic time control dimming

d) luminaire abnormality, monitoring alarm

2. Use environment and preliminary preparation

2.1 Use environment

The software usage requirements are as follows:

a) IOS version: IOS8.0 and above;

b) Must be used with a dedicated router --- MB8800;

c) The maximum number of lamps that can be registered by a single router is 50, and the maximum number of groups that can be grouped is 12;

d) The maximum number of assignable lights in a single group is 50. Considering the response time, the user operation experience should not exceed 15 lights in a single group.

e) The maximum number of configurable policies is 25, and no more than 5 are recommended.

f) The maximum distance between the router and the luminaire - 5-10 meters; (the outdoor open environment visible distance 20m)

2.2 Installation preparation before use

The software usage requirements are as follows:

Step1：Connect the router to the power supply and connect to the DC5V power supply interface on the reverse side of the router.

Step2：Mobile phone through the App Store, search for "SananBio" and download;

Step3：The mobile phone connects to the router to provide Wifi signal (Please refer to the MAC code on the back of the router for the Wifi name)

Note: Accessories Accessories:

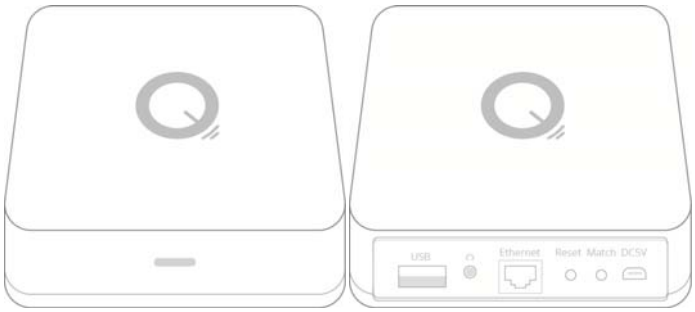

On the front of the gateway on the reverse side of the Gateway.

3. Control instructions

3.1 Lamp registration

1. The lamp is powered off;
2. Open the APP, click the icon "+" in the upper right corner of the page "Lamp List", in the pop-up drop-down menu, click the Match button
3. Power on the lamp;
4. The page jumps to the UN-G page and displays the number of the successfully registered lamps

3.2 Lamp grouping

Slide the lamp number and click the “MOVE TO” button to select the group number to be divided.

Or click the "Mul ti" check button in the "+" list in the upper right corner, check the group to be moved, click the "MOVE" button below, and select the group number to be divided.

3.3 Lamp removal

Click the “Multi” check button in the “+” list in the upper right corner to select the button. Click the “Remove” button to remove the fixture. If the fixture is in the UN-G group, the fixture is completely removed.

Note: All moving or deleting fixtures require the fixture to be connected.

3.4 Rename the fixture

Click the “Rename” button, (as enter the name of the fixture, the new name will

be displayed after the fixture number (the maximum length allowed for the lamp name is 9 letters or

numbers,

3.5 Add group

Click the upper left group number, select the lowest "+" button (as and enter

the new group name (group name up to 4 letters or number length)

3.6 Lamp dimming

Click the DIM button below to enter the dimming interface. You can dim the eight channels by dragging the bar or long pressing the input value. In addition, the switch buttons of the individual channels are provided on the right side of each channel

3.7 Channel renaming

The channel can be renamed by long pressing on the channel name. (Maximum length is 6 letters or numbers)

3.8 Manually set the eight channel value

The channel value can be set manually by long pressing the input channel value. (Allows you to enter a number from 0-100)

3.9 Quick dimming and setting

By clicking the four buttons A, B, C, D below, you can adjust the preset 4 dimming ratios to achieve fast dimming.

Edit the preset scale mode: Click the “Edit” button in the upper right corner, select the mode you want to edit and save it

3.10 Timing Policy Settings

3.10.1 Adding a Policy

1) Click the “Schedule” button below to enter the policy settings page;

2) Click the "+" button in the upper right corner;

3) Enter the start and end date to be set and the time to open these dates and the corresponding channel dimming ratio;

4) Click the “ADD” button, the light that receives the signal will flash. If there is no signal received by the lamp, the APP will display the message “The strategy of a certain lamp is incomplete, whether it is re-issued”, if the point is “Yes” The policy will be re-issued, click "No", the policy will not be sent to the lamp, and the strategy will be added successfully;

3.10.2 Editing Strategy

Skip the strategy list, click the “Edit” button, (as shown in Figure 3-15), enter the start and end date to be modified and the time to open these dates and the corresponding channel dimming ratio

3.10.3 Delete strategy

Skip the strategy list, click the "delete" button.

3.11 Other information display

1) Click the “Info” button below to enter the Info page, which is used to display the temperature of each lamp body

2) When the temperature is greater than 70 degrees, the luminaire will be abnormal, the alarm sign will appear at the top of the APP, and the open light will be extinguished; when the temperature is less than 70 degrees, the lamp that was originally turned off will open itself;

4. Common exception handling

If the software is found to be normal, but the fixture is out of control. Can try the following steps

A. Try to restart the router: the router is powered off after 5 seconds of power off;

B. Try to restart the lamp: the lamp is powered off after 5 seconds of power failure ;

C. Reset Router: Press and hold the Reset button on the rear of the router for 9 seconds with a sharp object. The router indicator will turn red and then release.

Figure 4-1

Installation instructions

Specifications:

Model No.	Input Voltage /Frequency	Power	Max Input Current	Weight
ZK2-W600-SR01/A	100-277V 50/60Hz	538W	6A	11.5KG
ZK2-A600-SR01/A	100-277V 50/60Hz	553W	6.1A	11.8KG

Installation Steps:

Accessories:

On the front of the gateway.

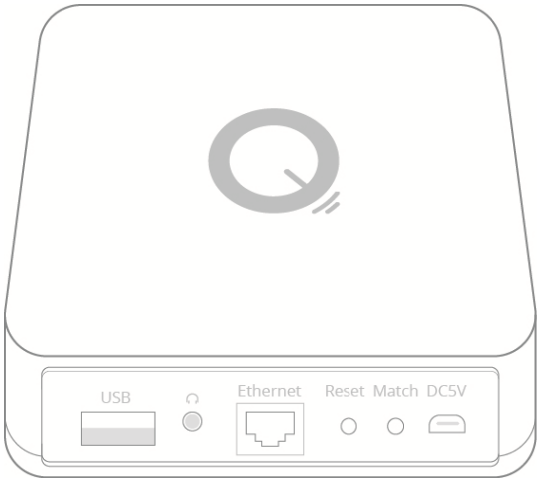

on the reverse side of the Gateway.

Step1：The Gateway is connected to the power supply and is connected to the DC5V power supply interface on the reverse side of the Gateway.

Step2：Mobile phone connection Getway provides Wifi signal

Step3：registered

A. Turn on the power

B. Open the app, click the icon "+" in the upper right corner, and in the drop-down menu that pops up, click the "Match" control.

C. Click the “Lamp List” page on the APP homepage, and the light list will appear in the “UN-G” group, that is, the registration light is successful.

Step4：Long press the name of the fixture, select the move to option, and move the fixture to the desired group to control the fixture.

FCC WARNING

Any Changes expressly or modifications not approved by the party responsible for compliance could void the user's authority to operate the equipment.
This device complies with part 15 of the FCC Rules. Operation is subject to the following two conditions:
(1) This device may not cause harmful interference,
and (2) this device must accept any interference received, including interference that may cause undesired operation.
Note:
This equipment has been tested and found to comply with the limits for a Class B digital device, pursuant to part 15 of the FCC Rules. These limits are designed to provide reasonable protection against harmful interference in a residential installation. This equipment generates, uses and can radiate radio frequency energy and, if not installed and used in accordance with the instructions, may cause harmful interference to radio communications. However, there is no guarantee that interference will not occur in a particular installation. If this equipment does cause harmful interference to radio or television reception, which can be determined by turning the equipment off and on, the user is encouraged to try to correct the interference by one or more of the following measures:
—Reorient or relocate the receiving antenna.
—Increase the separation between the equipment and receiver.
—Connect the equipment into an outlet on a circuit different from that to which the receiver is connected.
—Consult the dealer or an experienced radio/TV technician for help.