Karaoke USA

User's Guide

UHF Wireless Microphone

MODEL:
WM300

Before operating this product, please read these instructions.

Microphone:

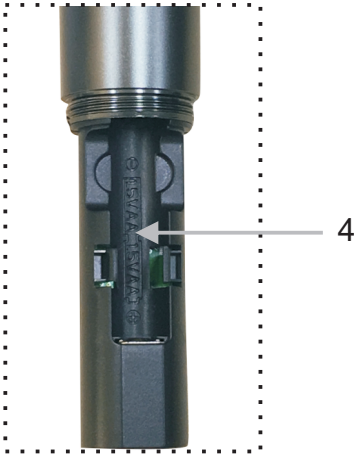

1. LED Display
2. POWER ON/OFF button
3. Frequency changes (combination key is needed)
4. Battery Compartment

Receiver:

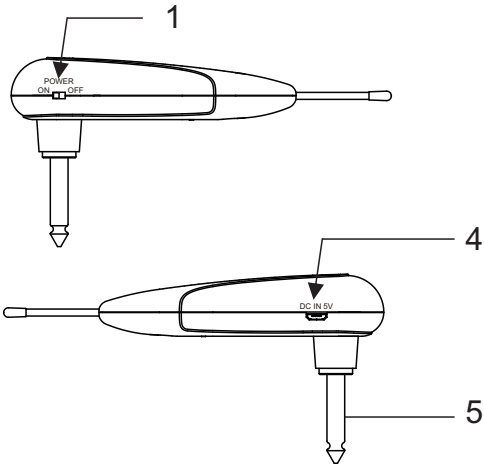

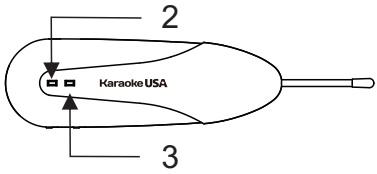

1. Power On/Off switch
2. Power Indicator
3. Signal Strength Indicator
4. Charging port
5. Signal output jack

What's in the Gift Box

Wm300 Microphone

Receiver

User's Guide x 1

Warranty Card x 1

USB Charging Cable

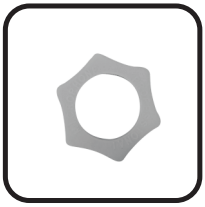

Antiskid sleeve

Product Usage

1. Microphone: Install an AA battery (not included) to the Microphone apartment.

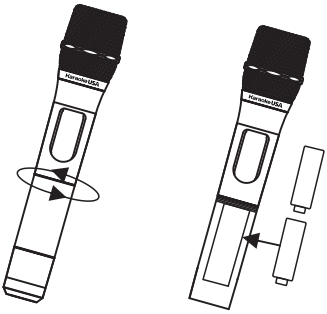

Receiver: make sure the built-in battery is active, if not, please use the charging cable (included) to charge

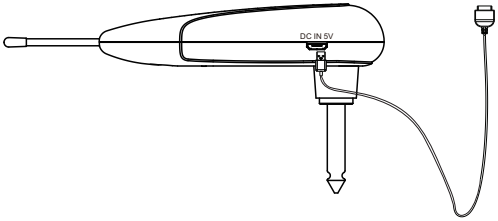

2. Hock up the receiver to your Karaoke machine or amplifier, switch on the receiver and your amplifier.

3.Turn on the microphone, enjoy your singing, and adjust the volume by the Karaoke machine or amplifier.

Frequency list:

902.30、903.40、904.70、906.00、907.30、908.60、909.90、911.20、912.50、913.80、915.10、916.40、917.70、919.00、920.30、921.60、922.90、924.20、925.50、926.80

Transmitting Power: 1mW max

Operational Hints:

The wireless microphone works in a certain distance. When the transmitter user moves in a facility, signal dropouts (momentary losses of signal reception) may be encountered. These dropouts are caused by the building's architectural design or materials which block the travel of or reflect the radio signal. If this occurs, the user needs to change locations for better signal reception.

LED display on the microphone :

- Battery life
- Signal strength
- Channel frequency

Receiver:

ON/OFF switch

: Once slide the unit to ON, a blue LED light will light up constantly, when the built-in battery is getting low, the LED will flash and dim. This requires to charge the battery.

Signal Strength Indicator: The LED is green and constant, means the wireless connection is in good condition. When talk to the microphone, the LED flashes red.

SYMPTOM	PROBLEM	SOLUTION
No sound	Microphone or receiver is OFF	Turn ON both of them
	Volume setting too low on Amplifier	Adjust the volume up on the amplifier or Karaoke machine
	Microphone and receiver not paired	Re-pair them (refer to frequency change)

§ 15.21 Information to user.
Any Changes or modifications not expressly approved by the party responsible for compliance could void the user's authority to operate the equipment.

§ 15.105 Information to the user.
Note: This equipment has been tested and found to comply with the limits for a Class B digital device, pursuant to part 15 of the FCC Rules. These limits are designed to provide reasonable protection against harmful interference in a residential installation. This equipment generates uses and can radiate radio frequency energy and, if not installed and used in accordance with the instructions, may cause harmful interference to radio communications. However, there is no guarantee that interference will not occur in a particular installation. If this equipment does cause harmful interference to radio or television reception, which can be determined by turning the equipment off and on, the user is encouraged to try to correct the interference by one or more of the following measures:
-Reorient or relocate the receiving antenna.
-Increase the separation between the equipment and receiver.
-Connect the equipment into an outlet on a circuit different from that to which the receiver is connected.
-Consult the dealer or an experienced radio/TV technician for help.

* RF warning for Portable device:
The device has been evaluated to meet general RF exposure requirement. The device can be used in portable exposure condition without restriction.

§ 15.19 Labelling requirements.
This device complies with part 15 of the FCC Rules. Operation is subject to the following two conditions: (1) This device may not cause harmful interference, and (2) this device must accept any interference received, including interference that may cause undesired operation.