SPECIFICATION

Part No. : **ILA.09**

Description : ISM 915MHz Chip Antenna
for ISM / LoRa / LPWAN / Sigfox

Features : 5.0mm *3.0mm * 0.5mm
High Efficiency
Omni-Directional
Low Profile
Compact Size
Surface-Mount
RoHS Compliant

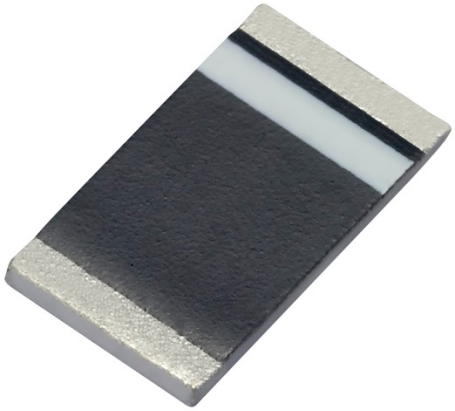

1. Introduction

The ILA.09 is a new 915 MHz ISM band embedded ceramic loop antenna from Taoglas featuring good efficiency of 55% at the center of the band. It is the perfect solution for the growing number of devices using the 915MHz band such as Sigfox and LoRa pplications in the US, or in metering application.

This antenna works the best when placed at the center of the board edge. The ILA.09 antenna, at 5 x 3 x 0.5 mm, is low profile and would be suitable for devices with space constraints. The ILA.09 is delivered on tape and reel and now allows M2M customers to use an omni-directional SMT antenna. The omni-directional radiation characteristics allow for excellent performance regardless of device orientation. This is especially useful for devices that are not fixed in one particular spot during use. When there is little PCB space available for antenna placement, but high performance is required, the ILA.09 is the ideal choice.

The antenna is manufactured in a TS16949 first tier automotive approved facility and has passed the most stringent reliability testing. Since it is SMD, it is much easier to integrate and more reliable in high volume production compared to helical antennas which are cumbersome to install and subject to variability due to need for manual assembly.

Typical Applications:

- Sigfox
- Lora
- LPWAN
- Automated Meter Reading (AMR)
- RFID
- Remote Monitoring
- Healthcare
- Sensing
- Alarm Systems
- Handheld Devices

2. Specification

ELECTRICAL*			
Center Frequency (MHz)	902	915	928
Peak Gain (dBi)	-3.00	0.39	-1.78
Efficiency (%)	25.66	55.93	34.45
Return Loss (dB)	< -3	< -10	<-3
Impedance (Ω)	50		
Polarization	Linear		
Input Power	2W		
MECHANICAL			
Dimensions (mm)	5.0 x 3.0 x 0.5		
Ground plane (mm)	80 x 40 (Standard Evaluation Board)		
Weight (g)	0.02		
ENVIRONMENTAL			
Operating Temperature	-40°C to 85°C		
Storage Temperature	-25°C to 85°C		
Relative Humidity	20% to 70%		

* Tested on 80*40mm evaluation board.

3. Antenna Characteristics

3.1 Return Loss

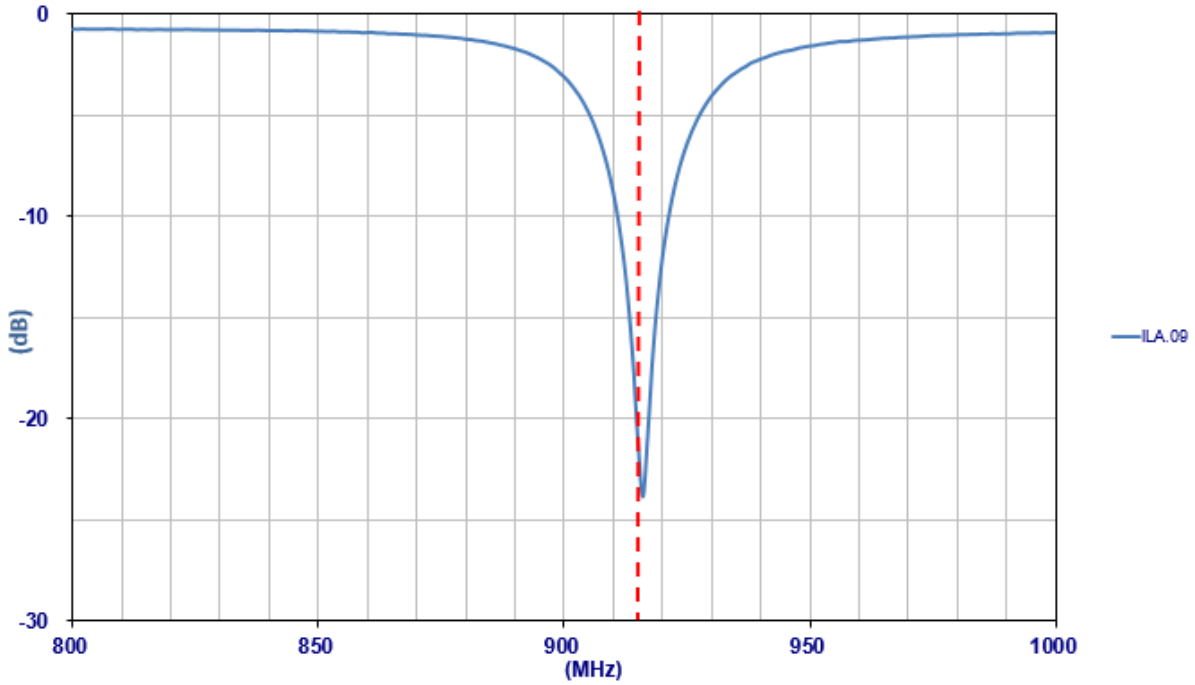

3.2 Efficiency

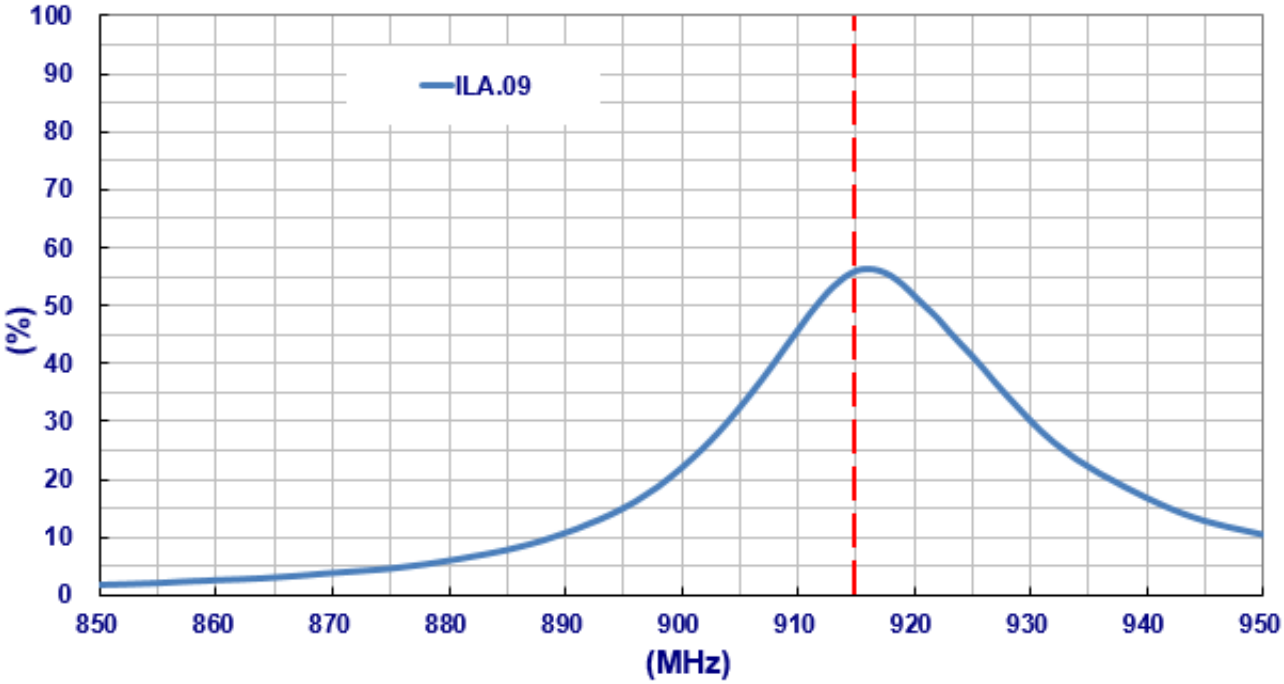

3.3 Average Gain

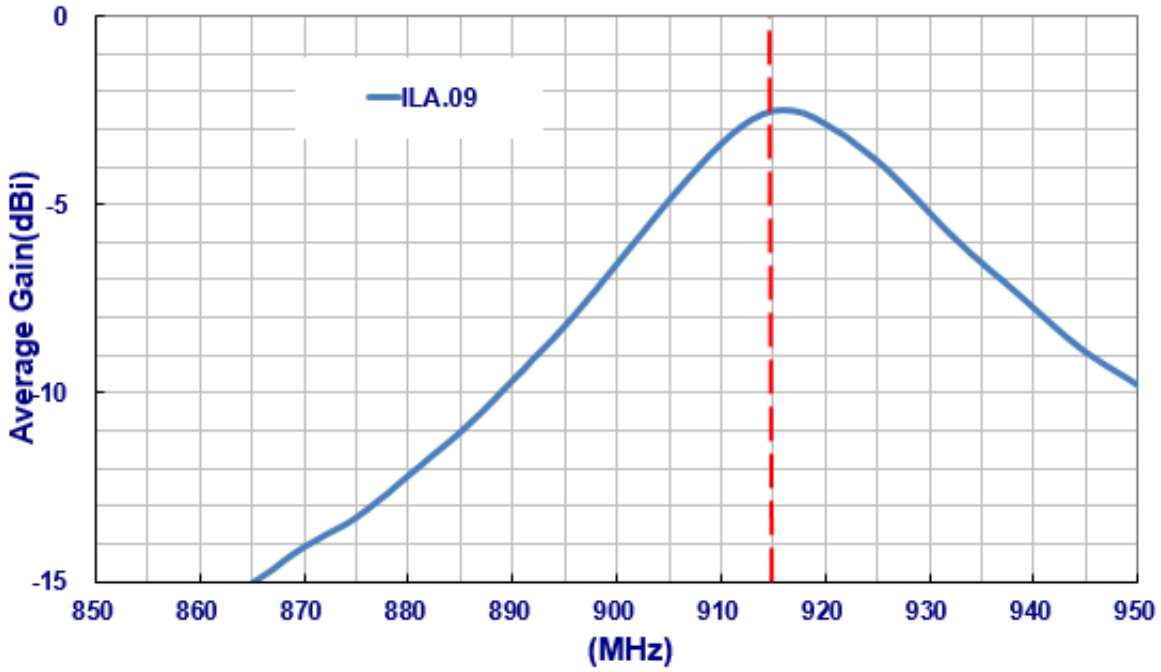
ILA.09
Average Gain(dBi)
0
-5
-10
-15
850
860
870
880
890
900
910
920
930
940
950
(MHz)

3.4 Peak Gain

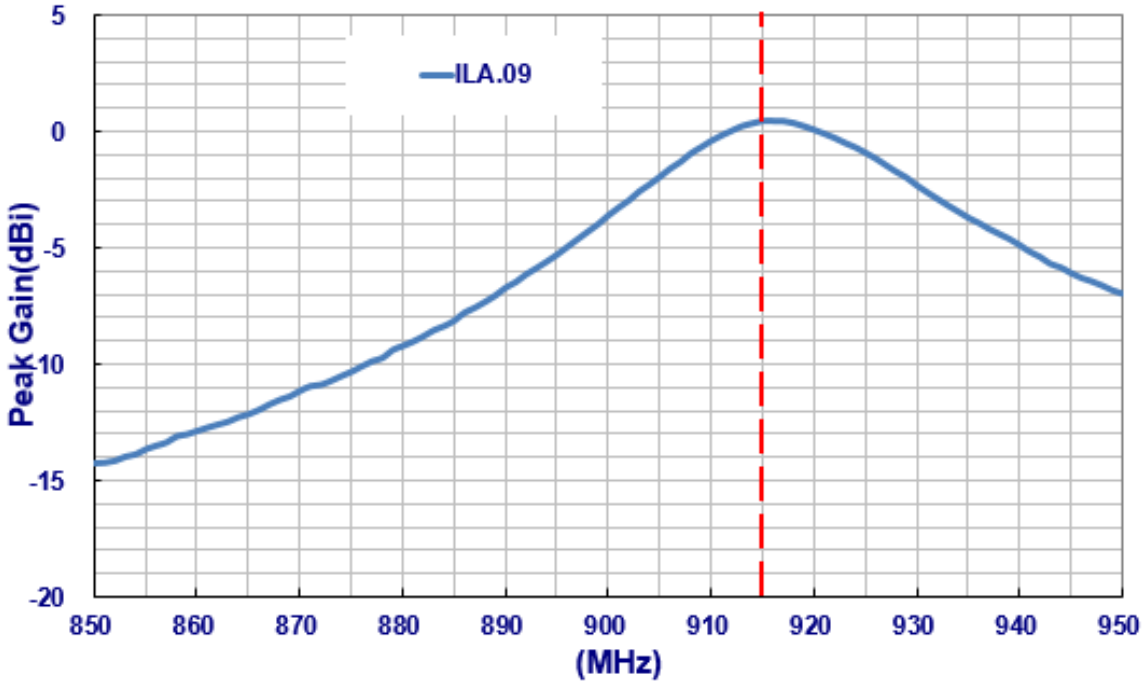
ILA.09
Peak Gain(dBi)
5
0
-5
-10
-15
-20
850
860
870
880
890
900
910
920
930
940
950
(MHz)

4. Antenna Radiation Pattern

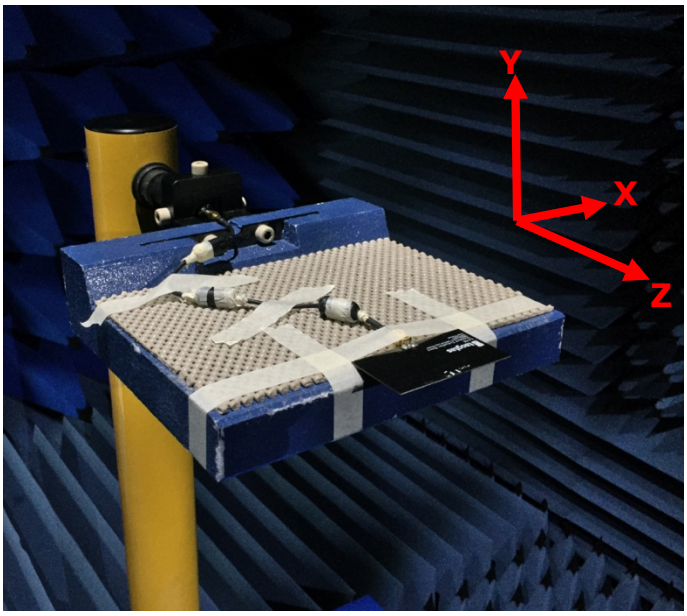

4.1 2D Radiation Pattern

XY-Plane

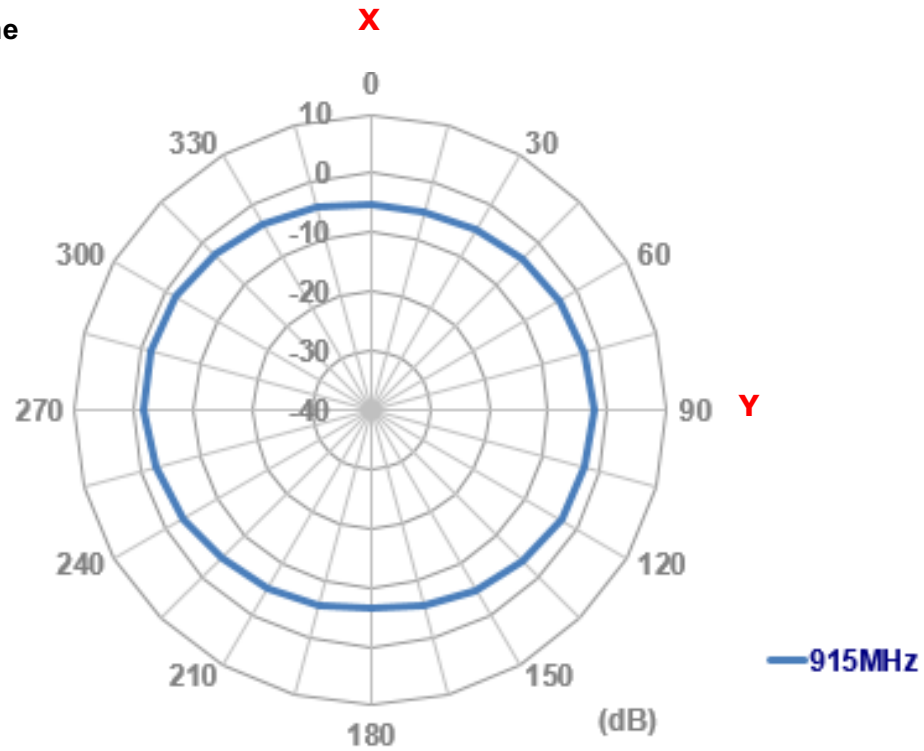

XZ-Plane

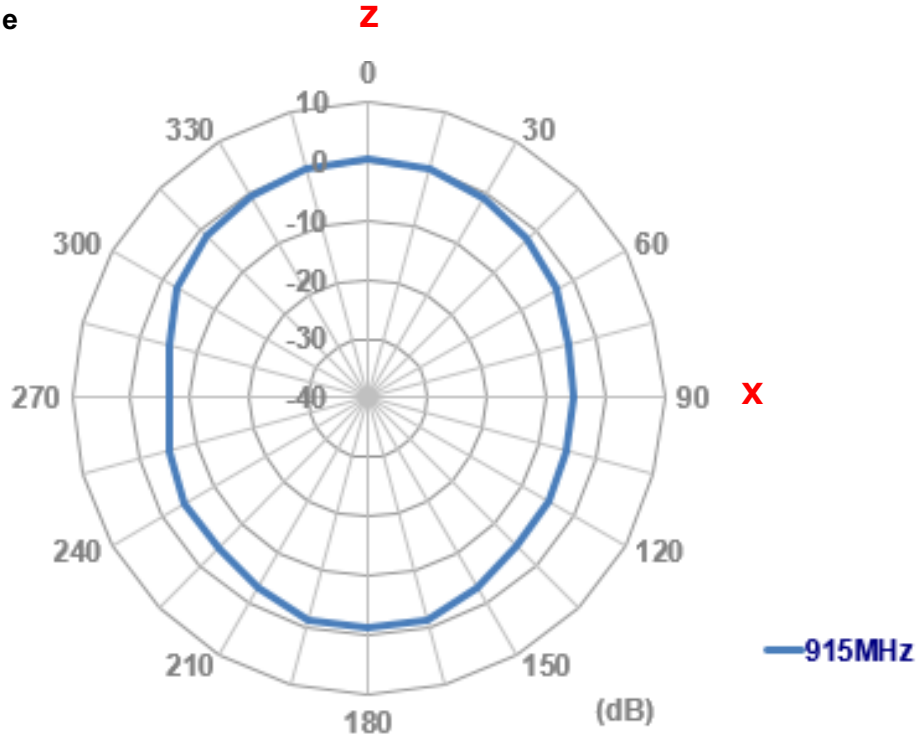

YZ-Plane

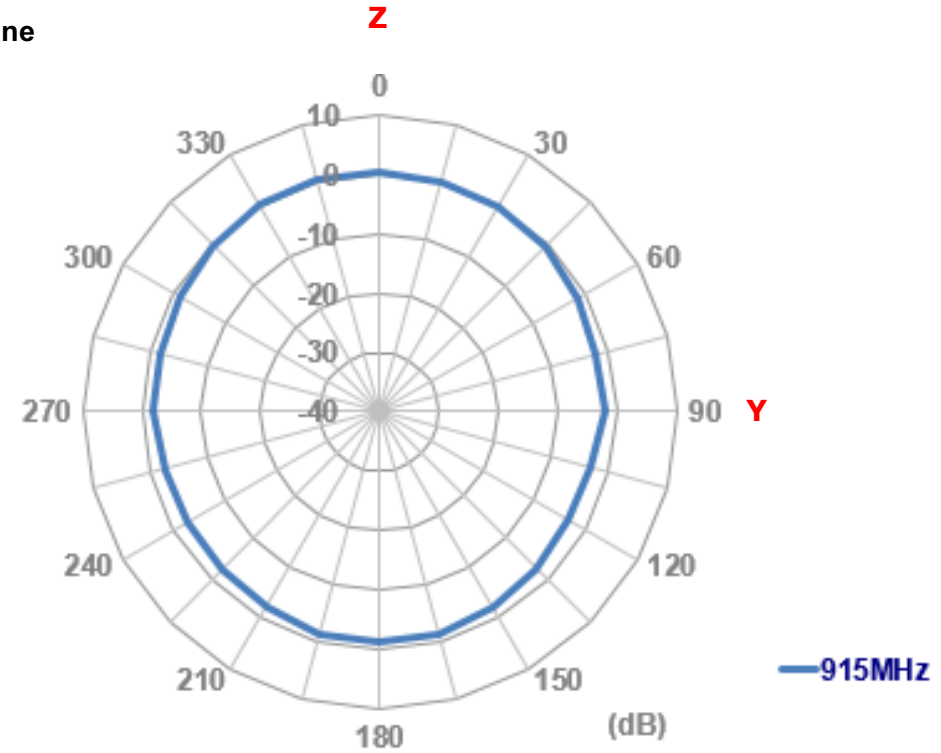

4.2 3D Radiation Pattern

- ISM 915MHz

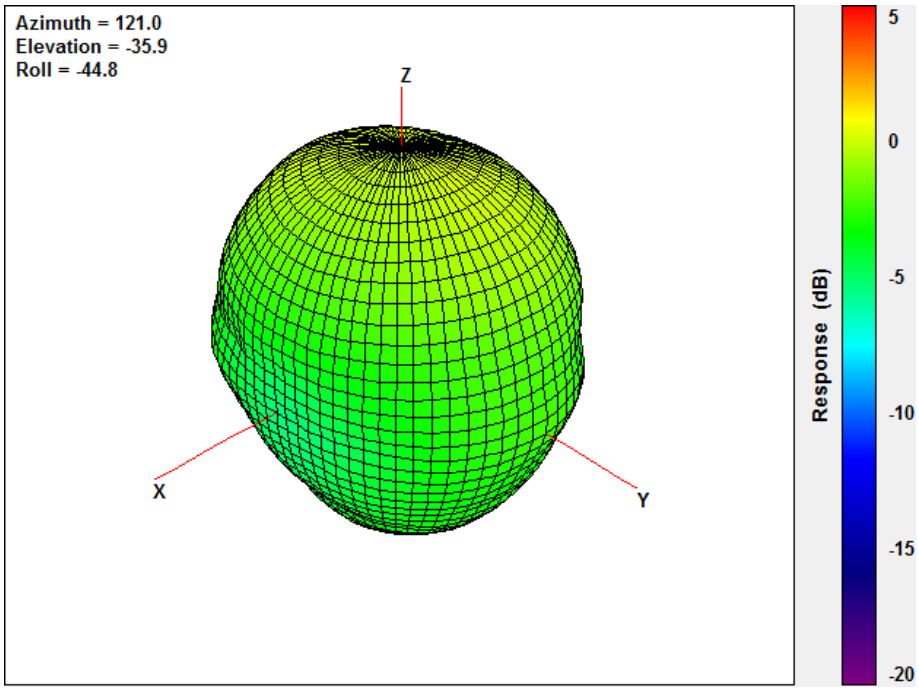

5. Mechanical Drawing (Unit: mm)

5.1 ILA.09

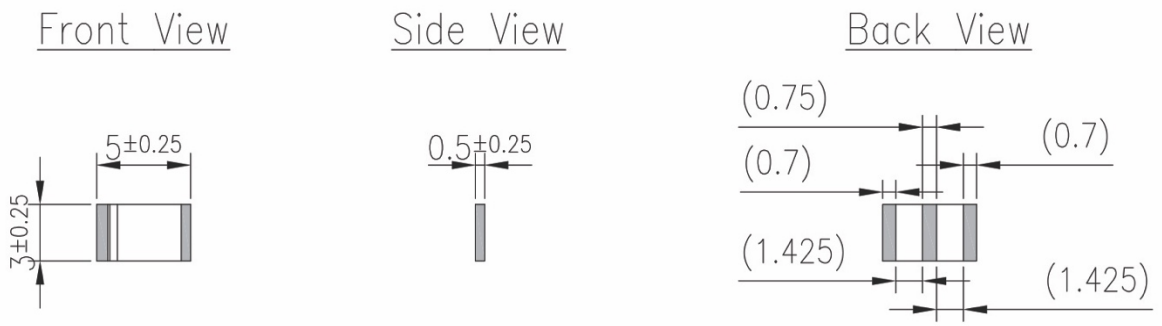

5.2 ILAD.09

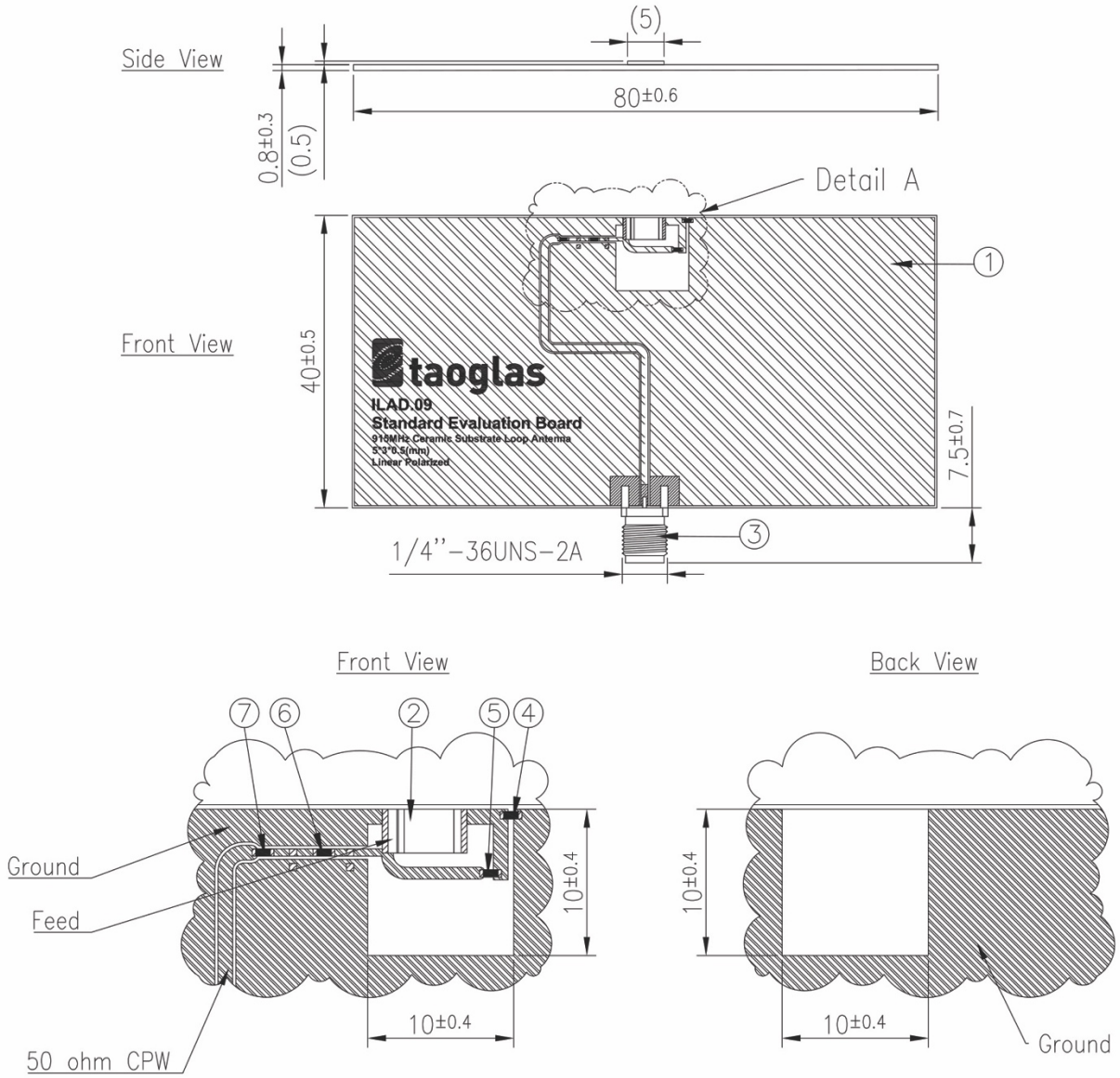

	Name	Material	Finish	QTY
1	ILAD.09 EVB Board	Composite	Black	1
2	ILA.09 Chip Antenna	Ceramic	N/A	1
3	SMA(F) ST	Brass	Au Plated	1
4	Capacitor 3.9pF (0402)	Ceramic	N/A	1
5	Capacitor 2.2pF (0402)	Ceramic	N/A	1
6	Inductor 1.8nH (0402)	Ceramic	N/A	1
7	Capacitor 22pF (0402)	Ceramic	N/A	1

6. Layout Guide

6.1 Footprint

Top Copper

Pad 1 should be connected to Ground. Pad 1 should be connected to a 50 ohm transmission line.
Pad 5 is connected to GND.

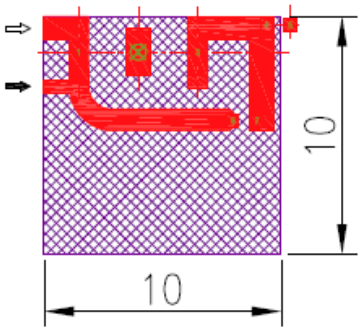

⇨ :
Connected to GND

➡ :
Connected to 50 ohm transmission line.

Top Solder Paste

Pads 1 and 3 are the same size, Pad 4, 5, 6, 7 are the same size.

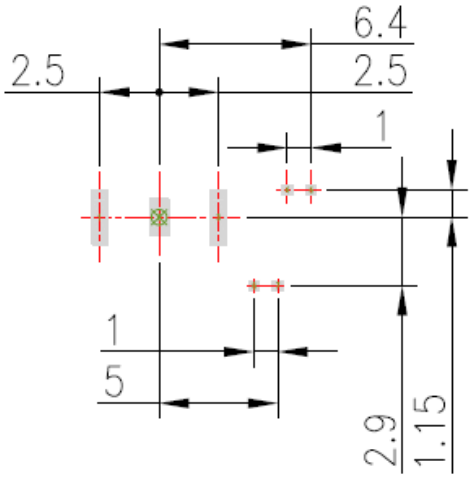

Top Solder Mask

Pads 1 and 3 are the same size, Pad 4, 5, 6, 7 are the same size.
This drawing is a negative of solder mask. Black regions are anti-mask.

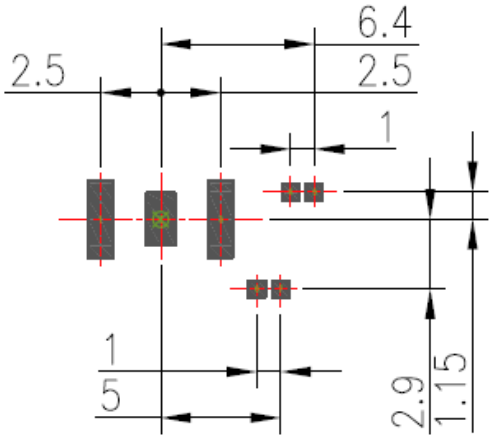

Composite Diagram

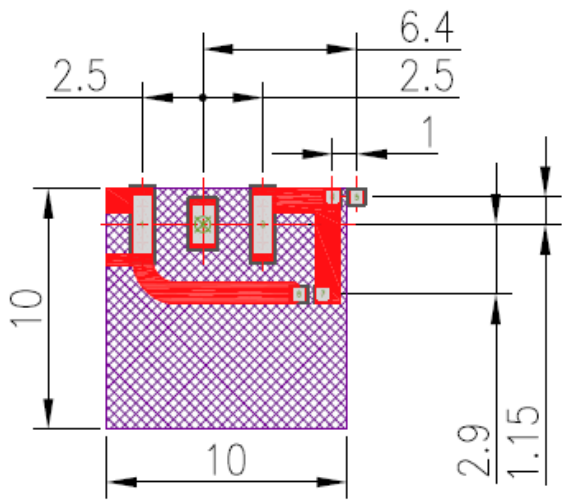

NOTE:
1. Ag Plated area
2. Solder Mask area
3. Copper area
4. Paste area
5. Copper Keepout Area
6. Ground keepout should extend from top layer through all inner PCB layers to minimize coupling from RF feed to ground.
7. Any vias in pads should be either filled or tented to prevent solder from wicking away from the pad during reflow.
8. The dimension tolerances should follow standard PCB manufacturing guidelines

* Footprint drawings in .dwg format will be provided upon request.

6.2 Matching Circuit

Like all antennas, surrounding components, enclosures, and changes to the GND plane dimensions can alter performance. A pi-matching network like the one shown below is required in case adjustments need to be made. The antenna EVB has the same matching network. The components on the EVB are a good starting point for a new design, but will need to be adjusted upon integration for best performance. The zero ohm resistor is needed for the ability to solder down a coax pigtail to make measurements with a vector network analyzer.

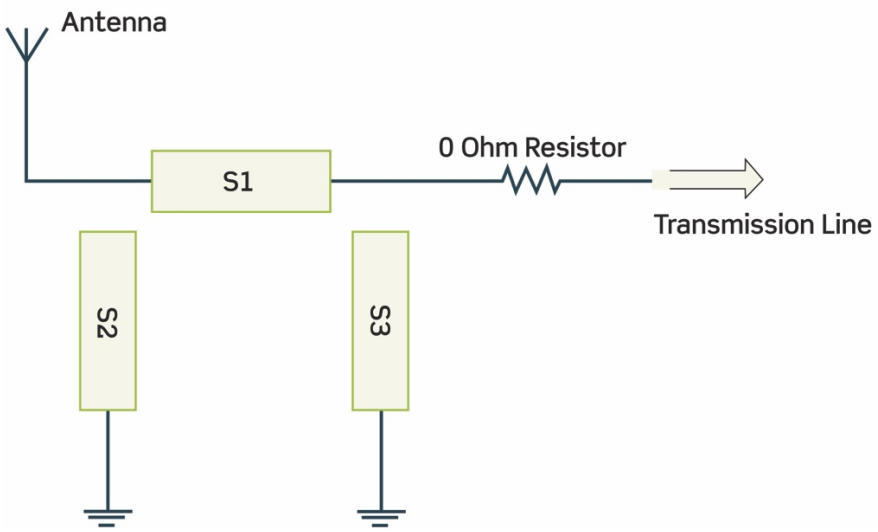

7. Solder Reflow Profile

Typical Soldering Profile for Lead-free Process:

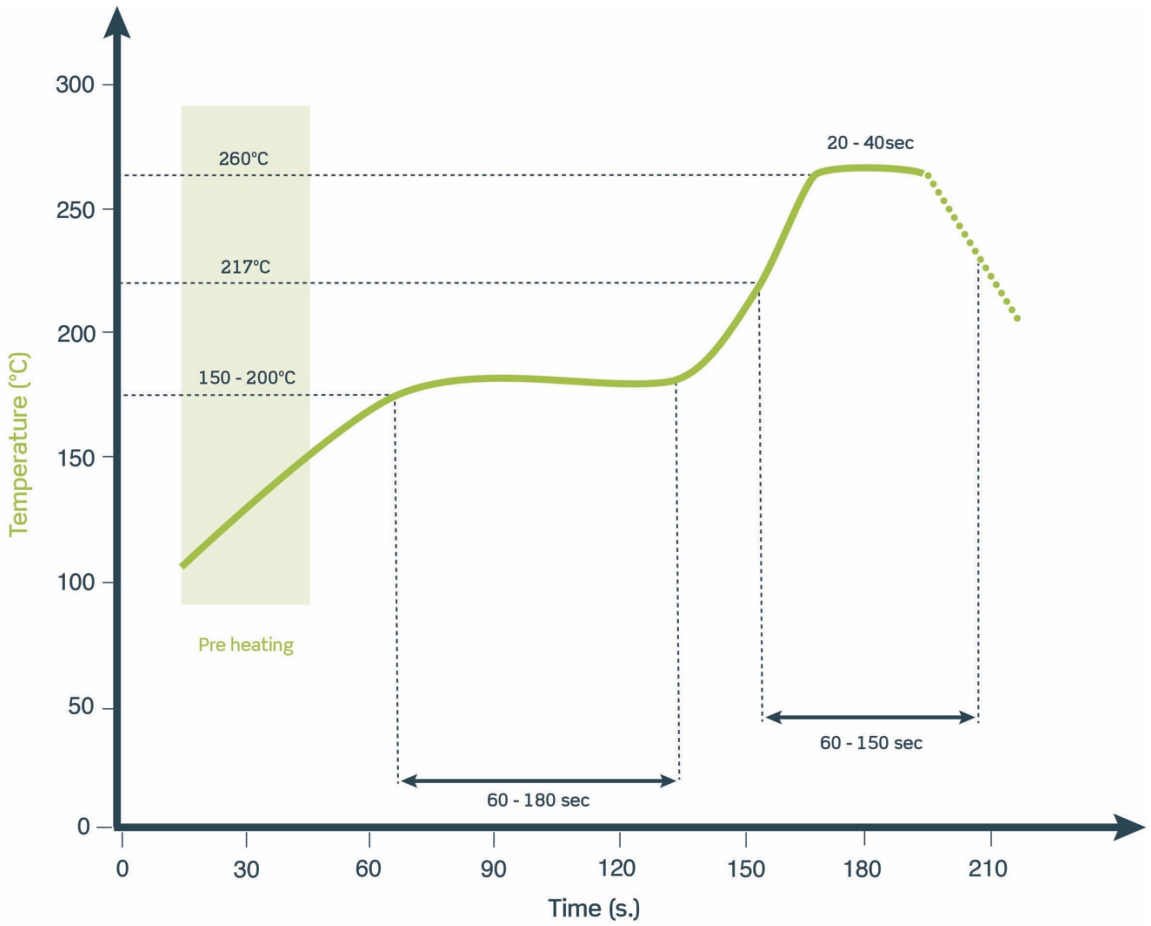

8. Packaging

6000 pcs ILA.09 per tape & reel
Dimensions - 330*330*17mm
Weight - 680g

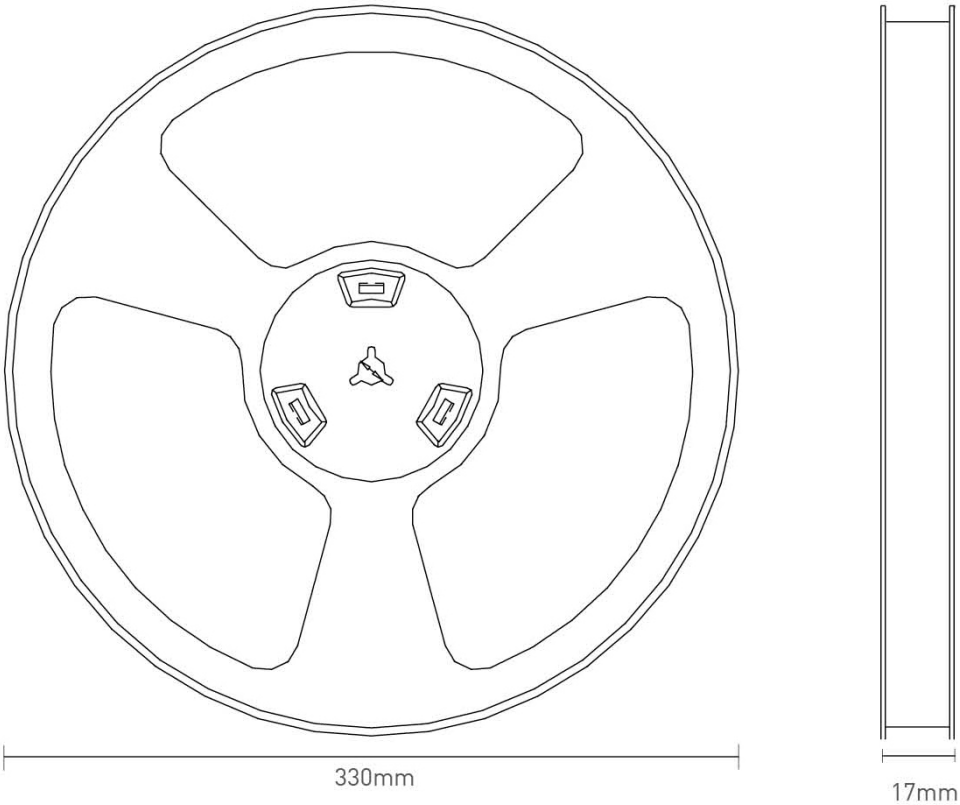

Tape Dimensions (unit: mm)		
Feature	Spec	Tolerances
W	12.00	±0.30
P	4.00	±0.10
E	1.75	±0.10
F	5.50	±0.10
P2	2.00	±0.10
D	1.50	+0.10 -0.00
Po	4.00	±0.10
10Po	40.00	±0.10

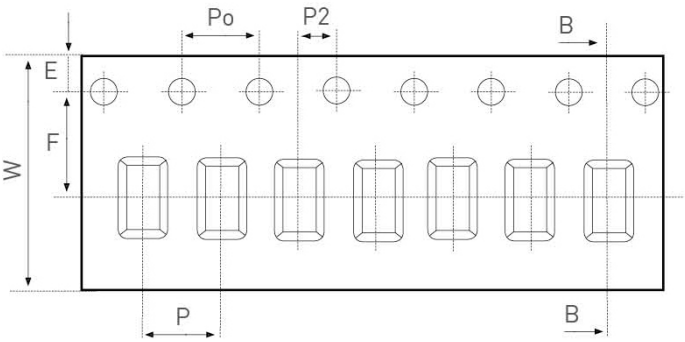

6000 pcs ILA.09
1 reel in small inner box
Dimensions - 330*330*17
Weight - 680g

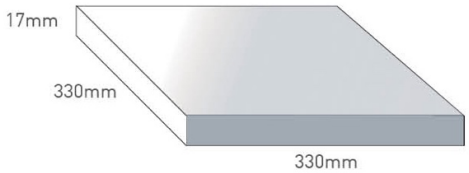

9 boxes / 54000 pcs in one carton
Carton Dimensions - 350*350*210mm
Weight - 6.69Kg

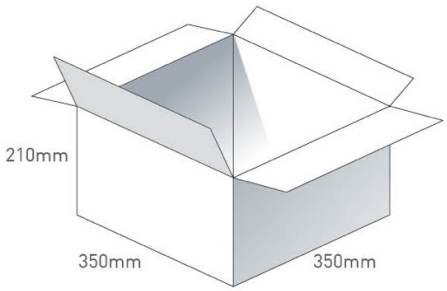

Pallet Dimensions 1220*1020*1410mm
36 Cartons per Pallet
4 Cartons per layer
9 Layers

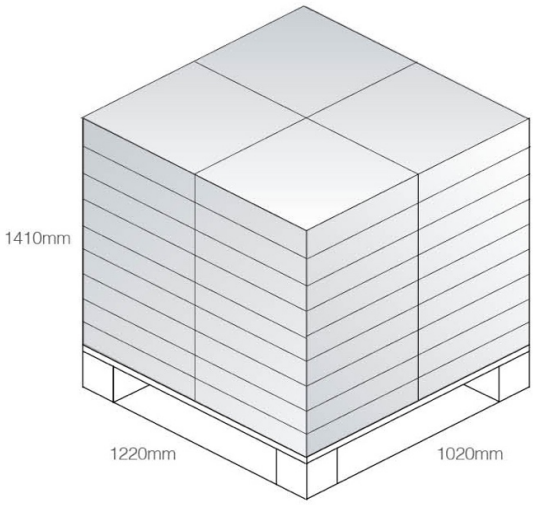

Taoglas makes no warranties based on the accuracy or completeness of the contents of this document and reserves the right to make changes to specifications and product descriptions at any time without notice. Taoglas reserves all rights to this document and the information contained herein. Reproduction, use or disclosure to third parties without express permission is strictly prohibited.

Copyright © Taoglas Ltd