SKU Number: E23106RFWHT

Motion Security light RF LINKING

Model Number: 356-9563

Questions, problems, missing parts?
Before returning to your retailer, call our customer service at 1-800-887-6326
Monday – Friday 9:00 a.m. – 5:00 p.m. CST

PACKAGE CONTENTS

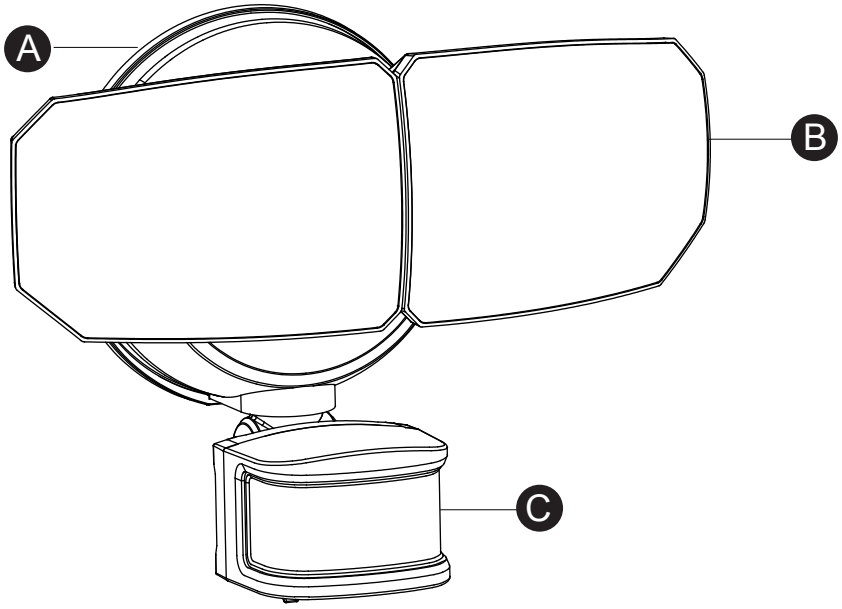

HARDWARE CONTENTS Note: Hardware not shown actual size.

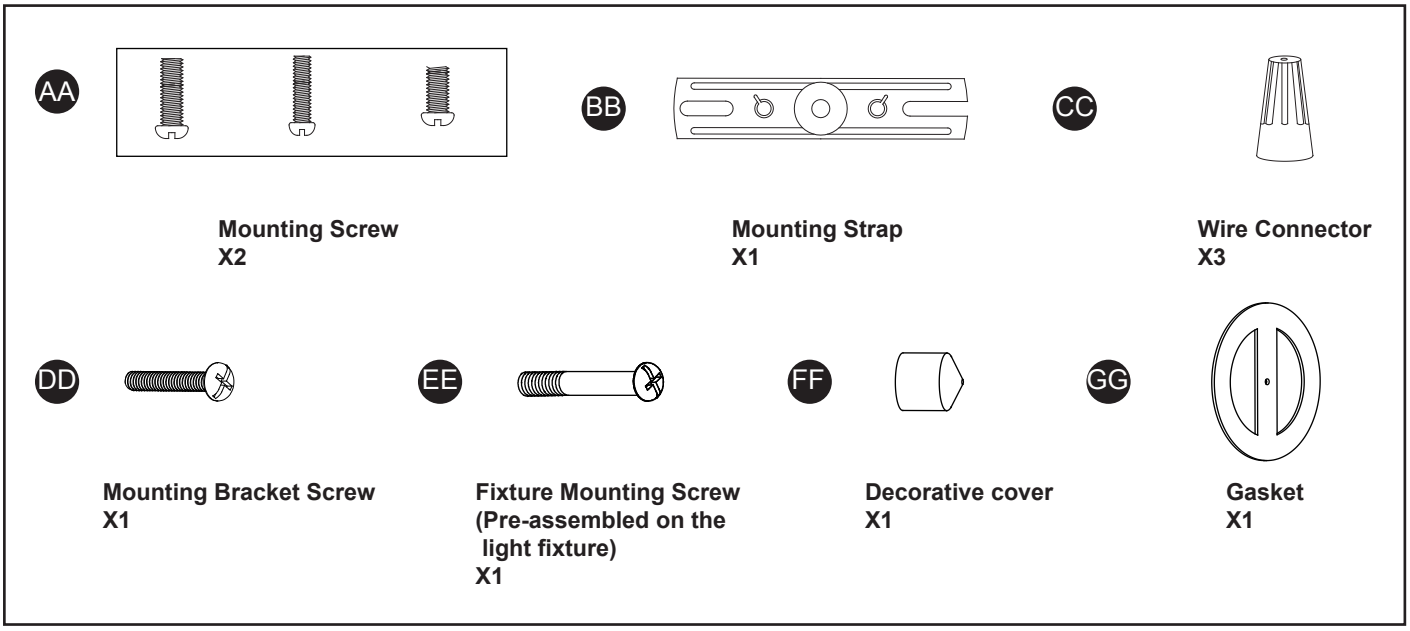

231024

⚠ SAFETY INFORMATION

Please read and understand this entire manual before attempting to assemble, operate or install the product.

WARNING

● Turn off electricity at main fuse box (or circuit breaker box) before beginning installation by removing fuse (or switching off circuit breaker).

● Be careful not to damage or cut the wire insulation (covering) during fixture installation. Do not permit wires to contact any surface having a sharp edge. To do so may damage or cut the wire insulation, which could cause serious injury or death from electric shock.

CAUTION

● All electrical connections must be in agreement with local codes, ordinances or the national electric code (NEC). Contact your municipal building department to learn about your local codes, permits and/or inspections.

● Risk of fire – most dwellings built before 1985 have supply wire rated for 140°F/60ºC. Consult a qualified electrician before installation.

● Do not connect this fixture to an electrical system that does not provide a means for equipment grounding. Never use a fixture in a two-wire system that is not grounded. If you are not sure your lighting system has a grounding means, do not attempt to install this fixture. Contact a qualified, licensed electrician for information with regards to proper grounding methods as required by the local electrical code in your area.

● Only general ON/OFF wall switch applies for this fixture. A dimmable wall switch shouldn't be used.

Rated Wattage: 26W
Working Temperature Range: -13ºF ~ 113ºF

PREPARATION

Before beginning assembly, installation or operation of product, make sure all parts are present. Compare parts with package contents list and diagram on previous page. If any part is missing or damaged, do not attempt to assemble, install or operate the product. Contact customer service for replacement parts.

Tools Required for Assembly (not included): Phillips Screwdriver, Safety Glasses, Ladder, Silicone Caulking Compound.

ASSEMBLY INSTRUCTIONS

Important to Know

1. This fixture requires a 120 VAC, 60 Hz power source.
2. For general safety and to avoid any possible damage to the sensor, be sure the power is switched "off" before adjustment.
3. Motion sensor: turns light ON automatically when motion is detected and turns light down to lower level or OFF automatically when motion stops.
4. Photocell keeps the light OFF during daylight hours.

Note: Fixture can be wall mounted or eave mounted.

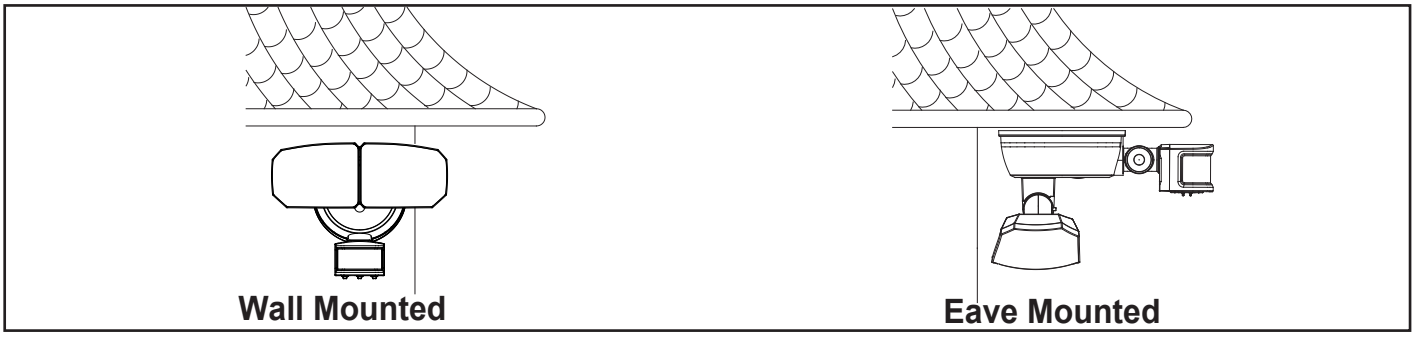

Light fixture and sensor should be mounted as shown above when installed (depending upon type of installation).

Before installing the light fixture under an eave, the sensor head must be rotated as shown in the next two steps for proper operation and to avoid the risk of electrical shock.

ASSEMBLY INSTRUCTIONS (continued)

For eave mounted only:

◉ Swing the sensor head towards the mounting surface.

◉ Rotate the sensor head unclockwise 180˚ so the controls face down.

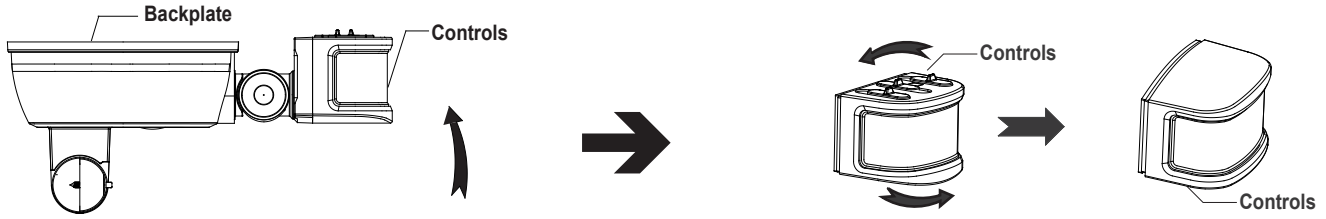

Turn off the power at fuse or circuit box.

1. Install the mounting strap (BB) to the outlet box with the stamped word "FRONT" facing away from the outlet box, using two mounting screws (AA) that best fit the outlet box (Choose one matching pair of suitable mounting screws (AA) from the 3 pairs provided).

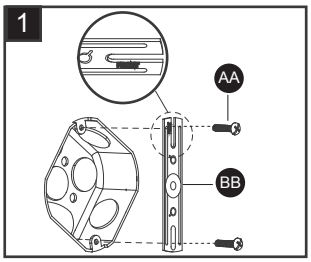

2. Thread the fixture wires through gasket (GG), then attach the gasket (GG) into backplate (A).

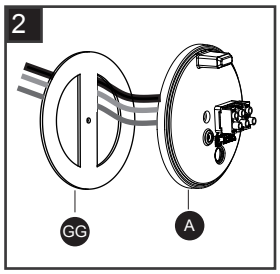

3. Pull out the source wires from the outlet box. Make wire connections using wire connectors (CC) as follows:
   ---Connect the black wire from the fixture to the "hot" wire from the power source.
   ---Connect the white wire from the fixture to the neutral wire from the power source.
   ---Connect the house ground wire and the fixture ground wire (green) using a wire connector (CC).
   Carefully tuck the wires back into the outlet box.

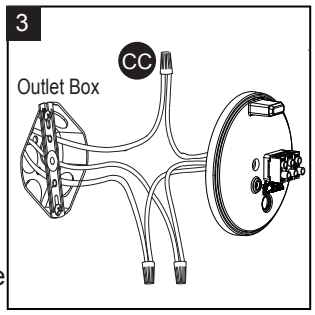

4. Place mounting bracket (A) against the outlet box, insert the mounting bracket screw (DD) through the mounting bracket hole, thread mounting bracket screw (DD) into the center hole of the mounting strap (BB). Tighten the mounting bracket screw (DD) securely.

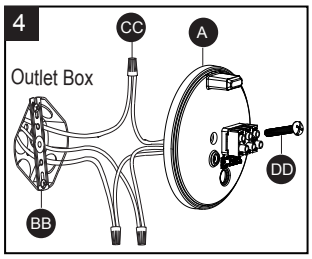

▲ When mounting to a wall, the "UP" arrow must point upward.

▲ When mounting to an eave, the "UP" arrow must point toward the building.

5. Attach the backplate of the light fixture to the mounting bracket (A), secure it with the fixture mounting screw (EE). Then push the decorative cover (FF) firmly into the fixture mounting screw (EE) hole on the light fixture.

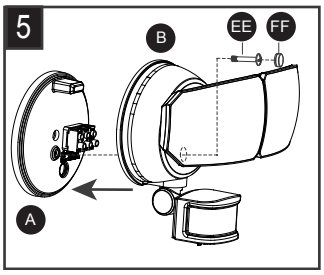

6. With silicone caulking compound, caulk completely around where the mounting bracket meets the wall surface.
   CAUTION: Be sure to caulk completely where the mounting bracket meets the wall surface to prevent water from seeping into the outlet box.

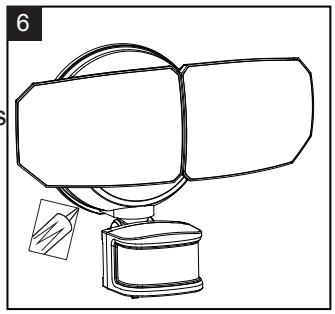

Adjusting the Sensor Head:

1. a: Aim sensor head (C) toward desired detection area, maintaining a 5° - 40° downward angle to allow moisture to drain.
   Note: Make sure sensor head is positioned with control knob facing towards the ground.
   b: You can rotate the sensor head up and down to change the coverage area. (See Fig.1)

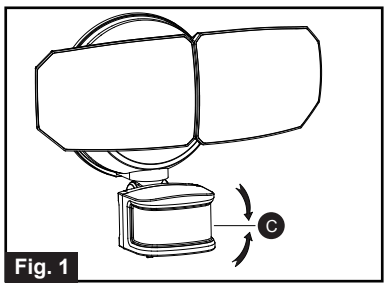

Fig. 1

ASSEMBLY INSTRUCTIONS (continued)

2. Note: Range set too high may increase false triggering. (See Fig.2, Fig.3)

Fig. 2

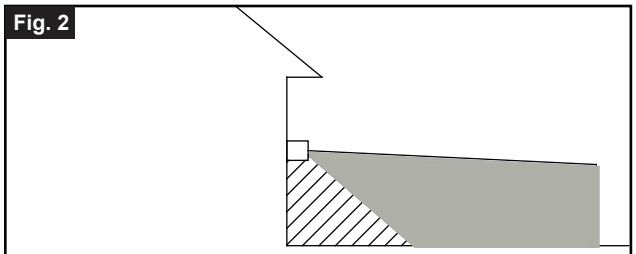

Sensor Adjustment Higher For Long Coverage

Fig. 3

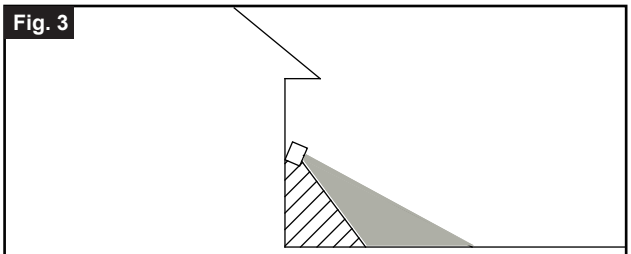

Sensor Adjustment Lower For Short Coverage

Adjusting the Light Head:

1. Gently grasp the light heads (B) and tilt them up or down, left or right to adjust the light coverage area.
   Keep the light heads (B) at least 1” (25mm) away from the sensor.
   (See Fig. 4)

2. Keep the light heads (B) 30˚ below horizontal to avoid water damage and electrical shock.

Fig. 4

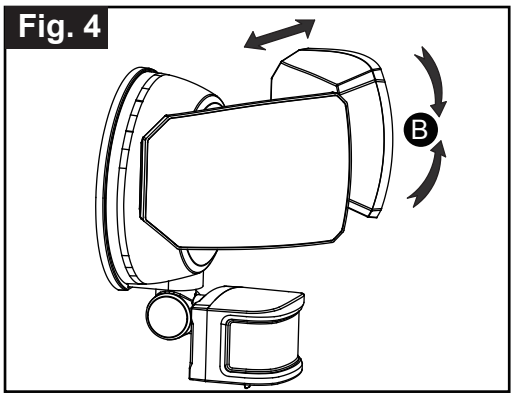

FUNCTION AND OPERATION

Sensitivity of Motion Sensor:

1. You can adjust the sensitivity of the motion sensor by using the “SENS” selector located on the bottom surface of the sensor. (See Fig.5)

2. Adjust motion sensor sensitivity to HIGH (H), MEDIUM (M), or LOW (L) to achieve desired performance.

3. Approximate range for each setting: 30 ft. (L), 50 ft. (M), 70 ft. (H).

Fig. 5

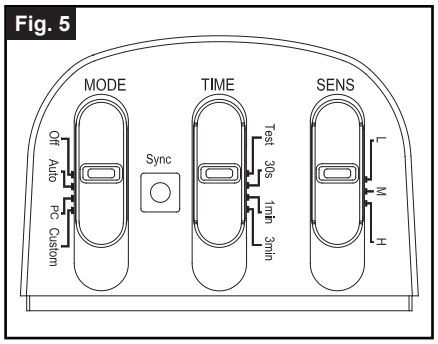

Choose a mode by sliding the switch on the bottom of the sensor. (See Fig.5)
Note: When power is first applied, the light will turn on to 100% brightness. The sensor will take 15 seconds to warm up.

1. TEST MODE (daytime and nighttime operation.)
   - Slide the Time switch to the “Test” position.
   - The light turns to high-level brightness when motion is detected, and stays on as long as the motion continues. Then it reverts back to low-level brightness as per setting about 5 seconds after motion is no longer detected.

2. OFF MODE (nighttime operation only)
   - In "OFF" mode, slide the “TIME” switch to the desired time (30s/1min/3min). At dusk, the light stays off, the light turns to high-level brightness when motion is detected, and stays on as long as motion continues. When the motion is no longer detected, it remains on for the predetermined shut-off delay time you set (30s/1min/3min), and then turns off automatically.
   - The light turns off automatically at dawn.

3. AUTO MODE (nighttime operation only)
   - To “AUTO” mode, slide the “TIME” switch to the desired time setting (30s/1min/3min). At dusk, the light turns on to low-level brightness. When motion is detected, the light turns to high-level brightness and stays on as long as motion continues. When the motion is no longer detected, the light at high-level brightness remains on for the predetermined time you set (30s/1min/3min), then switches back to low-level brightness automatically.
   - The light turns off automatically at dawn.

4. PC MODE (nighttime operation only)
   - In "PC" mode, the light will turn on at full brightness at dusk and remains on until dawn .

5. CUSTOM MODE (nighttime operation only):
   - In "CUSTOM" mode, the light turns on full brightness at dusk and off at dawn automatically.
   - Set motion sensor operation to go on at a specific time. Turn the wall switch "OFF", and turn it "ON" twice within 3 seconds. The light will go into motion-sensor operation at the specified time every night. The light turns off automatically at dawn.
     For example, a homeowner wants to have the light stay on high-level brightness from dusk to 8pm, and would like the light to go into "AUTO" motion sensor mode. To achieve this, the light homeowner will turn the wall switch "OFF", and turns it "ON" twice within 3 seconds. This sets the time the light goes into "AUTO" mode every day, the light will behave the same way. To revert back to Default, turn the wall switch "OFF" and then turn it "ON" after 5 seconds.

When light units are linked, the Set motion sensor operation to go at a specific time is also linked when MODE settings are in Custom.

6. RF Linking Network Setup
   - The light turns off automatically at dawn.
     From all the light units, select one as the main unit and the others as the sub-units;
     First to setup all the sub-units, press the Sync button twice within 3 seconds, the sub-units will flash once every 1 second meaning it's waiting to receive a matching signal from the main light.
     Then to setup the main unit, press and hold the Sync button for 5 seconds, the main unit will flash slowly (once every 3 seconds), and when the sub-units have paired with the signal, the sub-units will stop flashing confirming they have paired with the main unit. (If pairing is not successful, the sub-unit will keep flashing).
     When all the sub-units have stopped flashing, press the Sync button on the main unit once to complete the pairing process. (The main unit will stop flashing.)
     After completing the pairing process, any light within the Link group range can send of receive the photo sensor or motion sensor signal from the other light and response accordingly.
     Note: Maximum link up to 10 units per link group, each light can link within 120ft apart.

RF Linking

a. Photo Sensor Linking
When the Photo Sensor detects that the ambient brightness is less than the LUX set value.
- In "Auto" mode, the light turns on to Low-Level brightness and send out a comprehensive signal.
  1) Linking other lamps set in "Auto" mode to enter Low-Level brightness.
  2) Linking other lamps set in "PC" or "Custom" mode to enter High-Level brightness.
  3) Linking other lamps set in "OFF" mode to enter stays off.
- In "PC" or "Custom" mode, the light turns on to High level brightness and send out a comprehensive signal.
  1) Linking other lamps set in "Auto" mode to enter Low-Level brightness .
  2) Linking other lamps set in "PC" or "Custom"mode to enter High-Level brightness .
  3) Linking other lamps set in "OFF" mode to enter stays off.
- In "OFF" mode, the light turns on to Low-Level brightness and send out a comprehensive signal.
  1) Linking other lamps set in "Auto" mode to enter Low-Level brightness.
  2) Linking other lamps set in "PC" or "Custom" mode to enter High-Level brightness.
  3) Linking other lamps set in "OFF" mode to enter stays off.

When the Photo Sensor detects that the ambient brightness is greater than the LUX set value,
- A comprehensive signal from the initial detector unit will inform all the Linking lamps to turn off automatically.

b. Motion Detect Linking
When the Motion Sensor detects
- In "Auto" or “OFF” mode, the lamp sends out a comprehensive signal to all the linked lamps to automatically switch to High-Level brightness and remains on for the predetermined time you set (30s/1min/3min).
- In "Custom" mode,
  1) During the start of "Custom" mode, the lamp will remain on High-Level brightness and turn off the motion sensor the custom set time is up.
  2) Once the "Custom" set time is up, the lamp will turn on motion sensor and switch to "Auto" mode where the lamp sends out a comprehensive signal to all the linked lamps to automatically switch to High-Level brightness and remains on for the predetermined time you set (30s/1min/3min).

FUNCTION AND OPERATION (continued)

Unlink the unit from the Link Group

Press and hold the Sync button on the sensor head for 3 seconds, the light will flash 3 times to confirm reset and remove from the Link Group.

All lights will need to be reset before setup the Link Group.

Strongly recommended to set all the linked lights to the same MODE to avoid any confusion of function error.

7. Manual Override (nighttime operation only)
   - To temporarily override the settings in "OFF" or "AUTO" mode for on-demand continuous high-level brightness at night, turn the wall switch "OFF" then turn it "ON" twice within 3 seconds, the light remains on all night long.
     To shift back to "OFF" or "AUTO" or "3H" mode, turn the wall switch "OFF" then turn it "ON" twice within 3 seconds again. (See Fig.7)

Fig. 7

Manual Override Operation Diagram

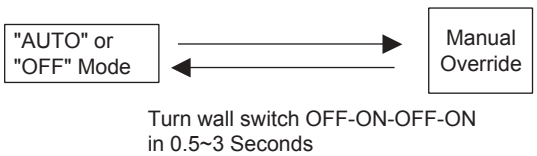

Customization Options:

Shut-off Delay

- The shut-off delay is the length of time the light will stay at brightness after motion is detected.

- You can set the shut-off delay by pushing the switch so that it points to the desired time setting (30s/1min/3min). (See Fig.5).

Where you install your fixture is important:
Be sure the light is mounted straight on the wall or eave; otherwise, the detection distance may be limited.

Fig.8

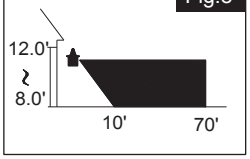

Fig.9

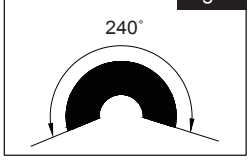

Notes:

1. The sensitivity of the motion sensor will increase as the environmental temperature gets cooler. For best performance, gently clean the lens with a soft cloth every 1 or 2 months to ensure maximum sensitivity.

2. For best performance, install fixture at least 8 feet above the ground. At such a height, the fixture will provide a detection distance of up to 70 feet at 77 degrees Fahrenheit. (See Fig.8)

3. The sensor detects movement across a detection range of 240 degrees. (See Fig.9)

Fig.10

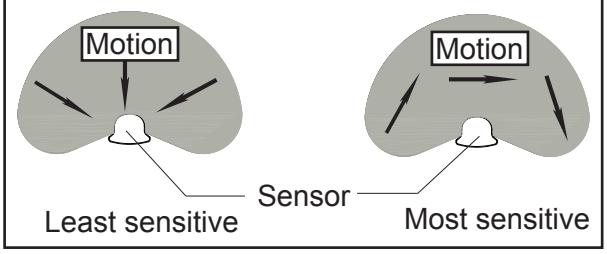

4. The sensor will be more sensitive to motion across its detection path than motion directly towards it. (See Fig.10)

5. To reduce possible nuisances, do not mount the fixture near a heat source like an air conditioner, vent or furnace exhaust, or in a direction facing any reflective object or other nearby light source.

The following parts are available for reorder if damaged or missing. Call our toll free at 1-800-887-6326.

Spare Parts List:

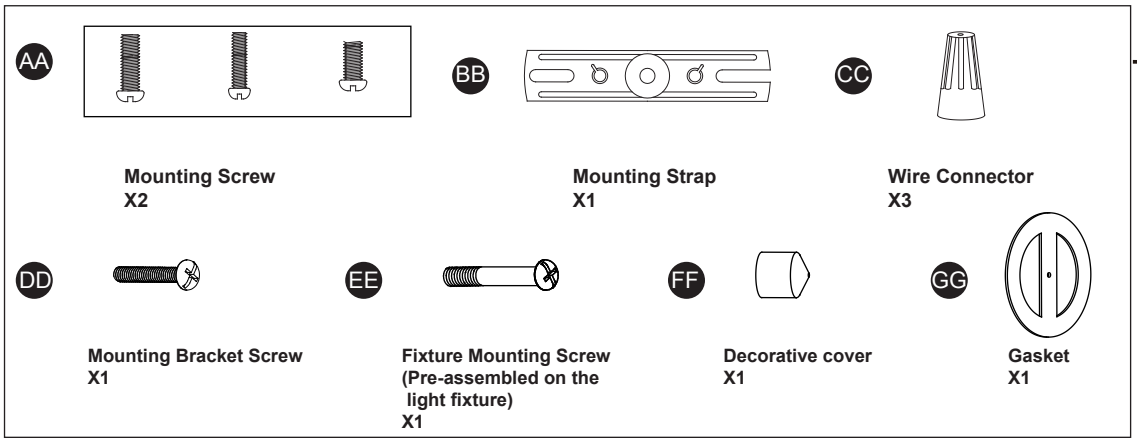

Assembly Kit
6740MM (1 SET)

CARE AND MAINTENANCE

- To prolong the original appearance, clean the light fixture with clear water and a soft, damp cloth only.
- Do not use paints, solvents, or other chemicals on this light fixture. They could cause a premature deterioration of the finish. This is not a defect in the finish and will not be covered by the warranty.

TROUBLESHOOTING

Problem	Possible Cause	Solution
The light will not come on.	☐ The light switch is turned off.	☐ Turn the light switch on.
	☐ The fuse is blown or the circuit breaker is turned off.	☐ Replace the fuse or turn the circuit breaker on.
	☐ Daylight turn-off (photocell) is in effect.	☐ Recheck after dark.
	☐ The circuit wiring is incorrect (if this is a new installation).	☐ Verify the wiring is correct.
	☐ The motion sensor is aimed in the wrong direction.	☐ Re-aim the motion sensor to cover the desired area.
	☐ The outside air temperature is close to the same as a person's body heat.	☐ Increase the "SENS" setting.
The light comes on during the day.	☐ The motion sensor may be installed in a relatively dark location.	☐ The light fixture is operating normally under these circumstances
	☐ The "TIME" switch is in the "TEST" position.	☐ Set the "TIME" switch to the 30s, 1min or 3min setting.
The light comes on for no apparent reason.	☐ The motion sensor may be sensing small animals or automobile traffic.	☐ Decrease the "SENS" setting or reposition the motion sensor.
	☐ The "SENS" switch is set too high.	☐ Decrease the "SENS" setting.
	☐ The outside temperature is much warmer or cooler than a person's body heat (summer or winter).	☐ Decrease the "SENS" setting.
	☐ The light fixture is wired through a dimmer or timer.	☐ Do not use a dimmer or timer to control the light fixture. Replace the dimmer or timer with a standard on/off wall switch.
The lights turns off too late in the PC setting.	☐ The light fixture may be installed in a relatively dark location.	☐ Relocate the light fixture.
The lights stay on continuously.	☐ The motion sensor may be picking up a heat source, such as an air vent, dryer vent, or brightly painted, heat-reflective surface.	☐ Decrease the "SENS" setting or reposition the motion sensor.
	☐ The motion sensor is in manual mode.	☐ Switch the motion sensor to auto. See Page 6 Fig.7.
	☐ The light fixture is wired through a dimmer or timer.	☐ Do not use a dimmer or timer to control the light fixture. Replace the dimmer or timer with a standard on/off wall switch.
	☐ The light fixture is on the same circuit as a motor, transformer, or fluorescent bulb.	☐ Install the light fixture on a circuit without motors, transformers, or fluorescent bulbs.

TROUBLESHOOTING (CONTINUED)

Problem	Possible Cause	Solution
The lights flash on and off.	☐ Heat or light from the lamp heads may be turning the motion sensor on and off. ☐ Heat is being reflected from other objects and may be turning the motion sensor on and off. ☐ The motion sensor is in “TEST” mode and warming up.	☐ Reposition the lamp heads away from the motion sensor. ☐ Decrease the “SENS” setting or reposition the motion sensor. ☐ While in "TEST" mode, the light only stays on for 30 seconds. Set the "TIME" switch to 30s,1min or 3min.
The lights flash once then stay off in manual mode.	☐ The motion sensor is detecting light from the lamp heads.	☐ Reposition the lamp heads to keep the area below the motion sensor relatively dark.

If unable to fix any of the above issues, please consult a certified electrician.

FIVE-YEAR LIMITED WARRANTY: If, during normal use, this PATRIOT LIGHTING® lighting fixture breaks or fails due to a defect in material workmanship within five (5) years from the date of original purchase, simply bring this lighting fixture with the original sales receipt back to your nearest MENARDS® retail store. At its discretion, PATRIOT LIGHTING® agrees to have the product or any defective part(s) repaired or replaced with the same or similar PATRIOT LIGHTING® product or part free of charge, within the stated warranty period, when returned by the original purchaser with original sales receipt. This warranty; (1) excludes expendable parts including but not limited to light bulbs; (2) does not cover damage that has resulted from abuse or misuse; and (3) does not cover any losses, labor, injuries to persons/property or costs. This warranty does give you specific legal rights and you may have other rights, which vary from state to state.

FCC Statement

This device complies with Part 15 of the FCC Rules. Operation is subject to the following two conditions: (1) this device may not cause harmful interference, and (2) this device must accept any interference received, including interference that may cause undesired operation.

Changes or modifications to this unit not expressly approved by the party responsible for compliance could void the user’s authority to operate the equipment.

NOTE: This equipment has been tested and found to comply with the limits for a Class B digital device, pursuant to Part 15 of the FCC Rules. These limits are designed to provide reasonable protection against harmful interference in a residential installation. This equipment generates uses and can radiate radio frequency energy and, if not installed and used in accordance with the instructions, may cause harmful interference to radio communications.

However, there is no guarantee that interference will not occur in a particular installation. If this equipment does cause harmful interference to radio or television reception, which can be determined by turning the equipment off and on, the user is encouraged to try to correct the interference by one or more of the following measures:

- ☐ Reorient or relocate the receiving antenna.
- ☐ Increase the separation between the equipment and receiver.
- ☐ Connect the equipment into an outlet on a circuit different from that to which the receiver is connected.
- ☐ Consult the dealer or an experienced radio/TV technician for help.

The device has been evaluated to meet general RF exposure requirement,This equipment should be installed and operated with a minumum distance of 20 cm between the radiator and your body.

Questions, problems, missing parts?
Before returning to your retailer, call our customer service at 1-800-887-6326
Monday – Friday 9:00 a.m. – 5:00 p.m. CST