MENARINI silicon biosystems

VR™ NxT

REF: DA0650

VOLUME REDUCTION INSTRUMENT

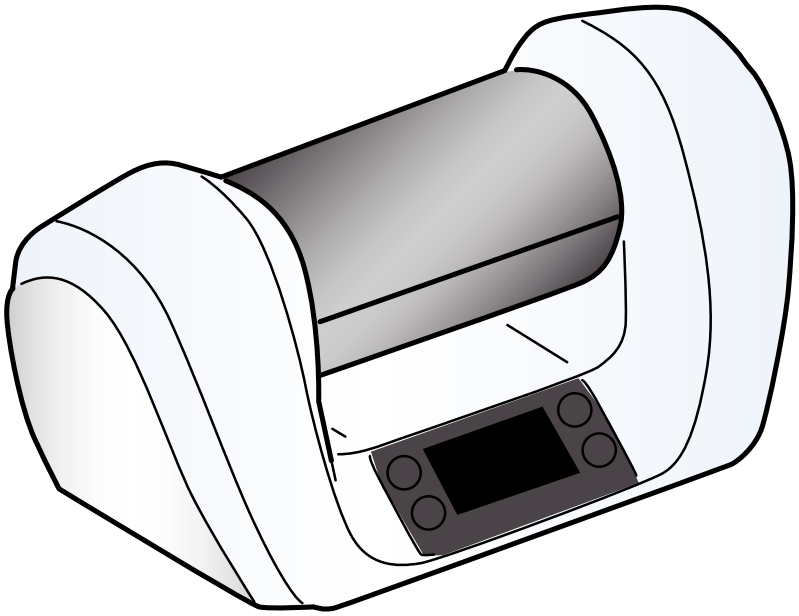

Instruction Manual

1.0

Original instructions

***NOTICE**: For safe and proper use, follow these instructions. Please keep them for future reference.*

Copyright

Any distribution, alteration, translation or reproduction, partial or total, of this document is strictly prohibited unless with prior authorization in writing from Menarini Silicon Biosystems with the exception of the following actions:

- Printing all or part of the document in its original format.
- Copying contents without any modification and stating Menarini Silicon Biosystems as copyright owner.

Menarini Silicon Biosystems reserves the right to make modifications or improvements to the relative documentation without prior notice.

Requests for authorization, additional copies of this manual or technical information on the latter, must be addressed to:

Menarini Silicon Biosystems
Via Giuseppe Di Vittorio 21b/3
40013 Castel Maggiore (BO)
Italia
www.siliconbiosystems.com

Trademarks and registered marks

VR™ NxT, DEPArray™, DEPArray™ Buffer for fixed cells, DEPArray™ NxT, CELLSEARCH®, CELLTRACKS® Cartridge, Ampli1™ and Ampli1™ WGA Kit are trademarks and registered marks of Menarini Silicon Biosystems.

Thermo Scientific™ DNA AWAY™ surface decontaminant, MicroAmp™ Reaction Tube and Corning Axygen® PCR-02-L-C MAXYMum Recovery™ Thin Wall PCR Tubes With Flat Cap are trademarks and registered marks of companies indicated in "Ordering information" on page 42. Corning® Thick Gel Loading Pipet Tip and epT.I.P.S® LoRetention dualfilter are registered marks of companies indicated in "Materials required" on page 45.

In this manual, registered marks and trademarks are not marked with ® and ™ symbols.

Contents

Glossary of terms **4**

Assistance **4**

Information on this manual **5**

Safety **6**
Warnings 6

Reception **11**
Unpacking 11
Identification 12

Product description **13**
Introduction to VR NxT 13
Instrument structure 14
Closed holder structure 15

Getting started **16**
Installing the instrument 16
Basic operations with the instrument 17
Basic operations with the holder 18
Display description 23

Operating with VR NxT **25**
Process for general purposes 25
Process for using DEPArray 26
Programs 26
Volume reduction to 13.5 or 12.5 µl 28
Volume reduction to 3 or 2 µl 30
Stop the volume reduction process 31

Maintenance of the instrument **34**
Cleaning 34
Software and program update 36

Troubleshooting and errors **37**
Troubleshooting 37
Errors 37

Technical features **40**
Technical data 40
Ordering information 42
Disposal 44

ANNEX A: CELLSEARCH sample preparation for DEPArray **45**
Prepare the CELLSEARCH sample for DEPArray with VR NxT 45

ANNEX B: DEPArray recoveries preparation for downstream genetic analysis **48**
Prepare the DEPArray recoveries for downstream genetic analysis with VR NxT 48

License Agreement **50**
Software conditions of use 50

Conformity **53**
Declarations 53

Warranty and Responsibility **54**
Warranty 54
Responsibility 54

Glossary of terms

D

DABUF

DEPArray Buffer for fixed cells

P

PBS

Phosphate Buffered Saline

Assistance

How to contact Technical Support

In case of malfunction or fault or to obtain information contact Menarini Silicon Biosystems at vrnxt@siliconbiosystems.com.

Customer Service (for orders only)

Please see the Contact us section at www.siliconbiosystems.com.

Assistance modalities

Menarini Silicon Biosystems carries out product support and technical support either directly, by remote access or through specialized, authorized third part companies, e.g. distributors.

Assistance or support is activated by a specific request from the Customer.

The responsibility of maintenance intervention during the warranty period is on Menarini Silicon Biosystems or its authorized product support and service providers, except for replacement of expendable materials.

Product support and service, beyond the initial warranty period, can be obtained through maintenance or services contracts from Menarini Silicon Biosystems or its authorized product support and service providers. Please contact Menarini Silicon Biosystems or the authorized provider for terms and conditions.

In the absence of a Service or Maintenance Contract after the initial warranty period, the Customer is liable for all costs of repair or maintenance, including, but not limited to, parts and labor.

Menarini Silicon Biosystems does not guarantee maintenance and repair results in situations where products have not been used in conformity with their intended use and, in particular, in accordance with instructions in this manual.

INFORMATION ON THIS MANUAL

Obligations

***NOTICE**: Read this manual before using the instrument the first time. This manual is an integral part of the product and must be kept for its entire working life.*
It must be consulted in all situations related to the life cycle of the product, from its delivery through to decommissioning.
It must be conserved so that it is accessible to operators, in a clean location and in good condition.
In the event of manual loss or damage, contact Menarini Silicon Biosystems.
Always enclose the manual when the equipment is sold.

Safety messages

Warnings related to safety of the user and instrument as envisaged in this document are as follows:

CAUTION! Indicates a dangerous situation which, if not avoided, may cause slight injury.

***NOTICE**: Indicates obligations that if not observed may cause damage to the instrument.*

Other messages

***Note**: Neutral and positive information that emphasize or add information to the main text. They provide information that can only be applied in special cases.*

Updates

Publication date	Code	Updates
02-2019	VRNXTinstr1EN	**First publication**

SAFETY

Warnings

Electrical risks

- **Do not pour water or any other liquids over the power supply (risk of electrical short circuits).**
- **Ensure the power supply casing is not damaged.**
- **Switch off the instrument and unplug the mains cable before cleaning the instrument.**
- **Use only the power cord and power supply set provided by the manufacturer.**
- **In case the power cord is damaged, switch off the main laboratory circuit breaker and disconnect the cable from the socket and the instrument.**
- **Do not remove the casing.**
- **Connect to the indicated voltage source. See "Technical data" on page 40.**
- **In case of danger, disconnect the power supply plug from the instrument or disconnect the electrical socket by using the mains socket circuit breaker, if present.**

Biological risks

- **Do not reuse the cap.**
- **Use permitted liquids, biological samples and biological sample container only.**
- **Observe the national regulations, the biological security level of your laboratory, the material safety data sheets, and the manufacturer's application notes.**
- **Wear individual protection devices as prescribed by your laboratory regulations.**
- **Handle the cap with care.**
- **For information on decontaminants, their use, dilutions, properties, and potential applications, please refer to the "Laboratory Biosafety Manual" (source: World Health Organization, Laboratory Biosafety Manual, in its current valid version).**
- **Clean the instrument and all its components regularly, and especially if they are visibly dirty.**

Other risks

- Handle the instrument and all its components with care, protecting them from mechanical damage.
- Inspect the main instrument casing and all accessories for damage before each use and replace any damaged accessories. Even minor cracks can lead to serious material damage.
- The holder is not waterproof. Do not submerge in liquids.
- Do not use a worn or non-compliant holder.
- Before inserting the closed holder in the rotor chamber and starting any procedure, be sure no foreign body is inside the rotor chamber.
- After the volume reduction process, do not handle the tubes in the holder without tweezers.
- Do not put the holder in a freezer.
- Do not store or use the instrument or any accessory outside the indicated temperature and humidity range or outdoors.
- Only use permitted cleaning products for cleaning exposed surfaces, both outside and inside the rotor chamber.
- Do not expose the instrument to UV, beta, gamma, or any other high-energy radiation for disinfection.
- Do not lift the instrument from the lid.
- Do not autoclave the instrument or any accessory.

Process invalidation risks

- Install the instrument far from vibrating devices.
- Do not connect the instrument Ethernet port.
- Electrostatic discharges or electromagnetic radiations may interfere with the proper operation of the instrument.
- Ensure the holders and rotor holes are clean and free from obstructions to avoid any abnormal behavior and unpredictable messages.
- Ensure the closed holder housing is clean.

Risks for the samples

- Damaged tubes must not be used.
- Use only liquids and sample containers indicated in this manual. Buffers and tubes different from those indicated in this manual are not suitable and should not be used.
- Handle samples and closed holder with samples inside with care to avoid creating bubbles and nullifying the centrifuge effect.
- Do not process samples with bubbles. In case of bubbles, the output sample volume is not guaranteed.
- For the supernatant to be trapped correctly in the cap, the input sample volume must not exceed 200 µl.
- Do not use the instrument and its components if not intact.
- Do not apply labels on the tube containing the sample.
- Check the presence of the holder clips. If they are missing, do not use the holder.
- To guarantee correct sample processing, keep the closed holder perpendicular to the plane (see "Position the closed holder" on page 21).
- Do not process samples having a density higher than 1.2 g/mL.
- Use the swing bucket centrifuge only when prescribed. Do not use fixed angle centrifuge.
- Do not use accessories whose maximum service life has been exceeded.
- If unusual noise comes from the instrument, the instrument must be immediately stopped (see "Stop the volume reduction process" on page 31).

Product liability

The product is the result of the professional experience gained by Menarini Silicon Biosystems. It must be installed and used with the indicated and authorized accessories in compliance with this instruction manual.

Liability for any property damage or personal injury is transferred to the operator in the following cases:

- use of the instrument for purposes other than that indicated in "Intended use" on the facing page
- use of accessories and consumables other than those authorized by Menarini Silicon Biosystems
- attempts to open and repair the instrument autonomously or with the help of personnel not authorized by Menarini Silicon Biosystems
- instrument alterations

Intended users

VR NxT is intended to be used by laboratory technicians, biologists, biotechnologists and researchers with a deep knowledge of the typical laboratory processes.

Safety labels on the instrument

Here are the labels that warn about how to avoid risks:

Symbol	Description	Location
	See the Instruction manual.	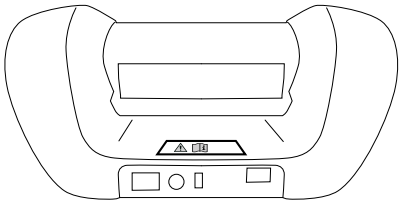
	Risk of electrocution. External power supply shall be kept away from liquid sources (liquid containers, liquid spillages and so on).	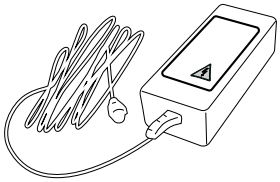

Intended use

VR NxT is a sample preparation instrument intended to be used for the volume reduction of liquids containing or not containing cells.

It is for research use only and not for use in diagnostic procedures.

Application limits

The instrument is not intended to operate in an explosive atmosphere (ATEX directive 2014/34/EU).

Do not operate the instrument in areas where work is completed with explosive substances.

Do not use this instrument to process any explosive or highly reactive substances.

Do not use this instrument for processing any substances which could generate an explosive atmosphere.

Misuse

VR NxT is not a centrifuge.

If the equipment is used in a manner not specified by this manual, the protection provided by the equipment may be impaired. The following is a NOT exhaustive list of misuse cases:

- Insert non-compliant holders, caps or closed holders inside the closed holder housing.
- Position the closed holders inside the closed holder housing in a manner different from instructions (see "Insert the closed holder in the instrument" on page 20).
- Force the lid opening while the program is running and before the rotating parts have come to a complete stop.
- Use the consumable cap more than once.
- Use and connect the instrument to power supply, cord or voltage sources different from those provided and/or specified by the manufacturer.

Employer obligations

The employer must do what follows:

- recruit, train and assign personnel authorized to perform their tasks
- train assigned personnel and have them follow the safety regulations for each specific task
- define work procedures
- ensure that the instruction manual provided by the manufacturer is followed

RECEPTION

Unpacking

Precautions on reception

On reception of the product, check the integrity of the package and the shock watch on the package itself. In case the package is damaged or tampered with or the shock watch is triggered, contact Technical Support (see "How to contact Technical Support" on page 4).

Open the package contents in a laboratory clean environment and store the package for future use. Check the presence of all components and their integrity.

Contents of the package

The contents of the package are the following:

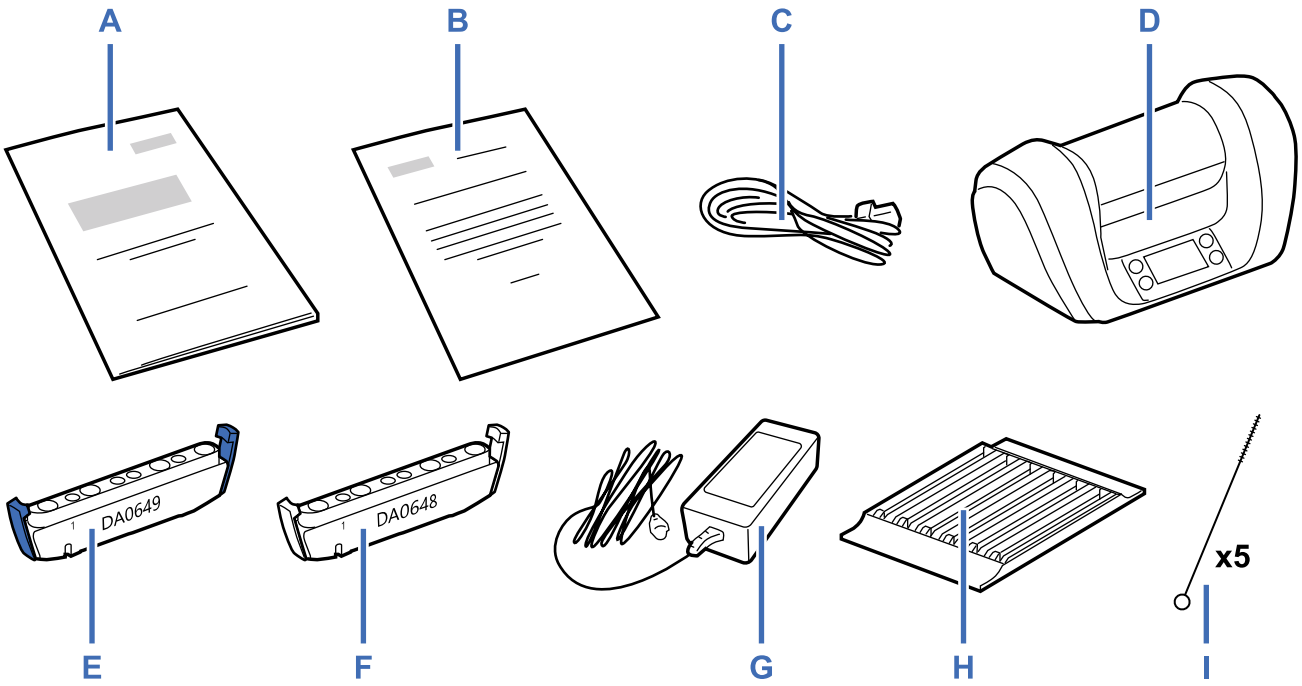

Part	Name
A	This manual
B	EC Declaration of Conformity
C	Power cord
D	VR NxT (instrument)
E	Blue holder (DA0649)
F	Gray holder (DA0648)
G	Power supply
H	Holder rack
I	Hole brush (5 pieces)

Storage warnings

***NOTICE**: Keep the packing materials to move or store the instrument in future. The instrument must be stored indoor in its original packaging to avoid exposure to adverse weather conditions.*

Identification

Manufacturer's contacts

Menarini Silicon Biosystems SpA
Via Giuseppe Di Vittorio 21b/3
40013 Castel Maggiore (BO)
Italia
www.siliconbiosystems.com

Instrument identification label

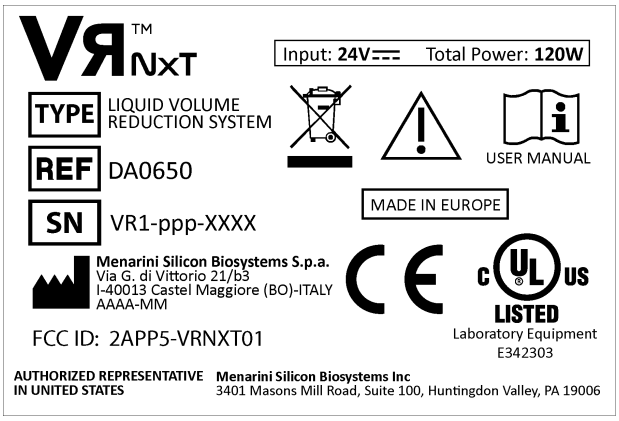

Part	Description
TYPE	Product description
REF	Part number
SN	Serial number
	Manufacturer data with date of manufacture.
	Dispose the instrument as electronic waste (European Community Directive 2012/19/EU).
	Consult the instruction for use for important cautionary information.
	Consult the instruction manual.
CE	CE mark, declaration of conformity for Europe
c UL us LISTED	UL mark, with UL file number 12.5
FCC ID	FCC certification ID number

PRODUCT DESCRIPTION

Introduction to VR NxT

Description

VR NxT is a laboratory instrument that automates the sample volume reduction procedures. It processes up to four samples in parallel and can be used:

- for liquids containing or not containing cells
- for both live and fixed cells
- for general purposes or in association with DEPArray

Operating principle

The instrument has two volume reduction programs for general purposes and two volume reduction programs for easing the DEPArray use.

To guarantee correct sample processing, samples need to be properly prepared with specific buffers and centrifuged before each program. The tubes with the prepared samples inside must then be inserted in the closed holder and the closed holder must be placed in the closed holder housing.

Once a program is launched, the instrument uses the centrifugal force to collect and trap the excess liquid in the cap.

For your safety, when the rotor chamber is open, an internal protection disengages the rotor motor and activates a brake to block the rotor. The lid is designed to avoid any accidental opening of the chamber.

Advantages of using VR NxT

The use of VR NxT has the following advantages:

- Preserve the cells contained in the sample.
- Shorten the time for reducing the sample volume.
- Improve process reproducibility by automatization.

Instrument structure

Front structure

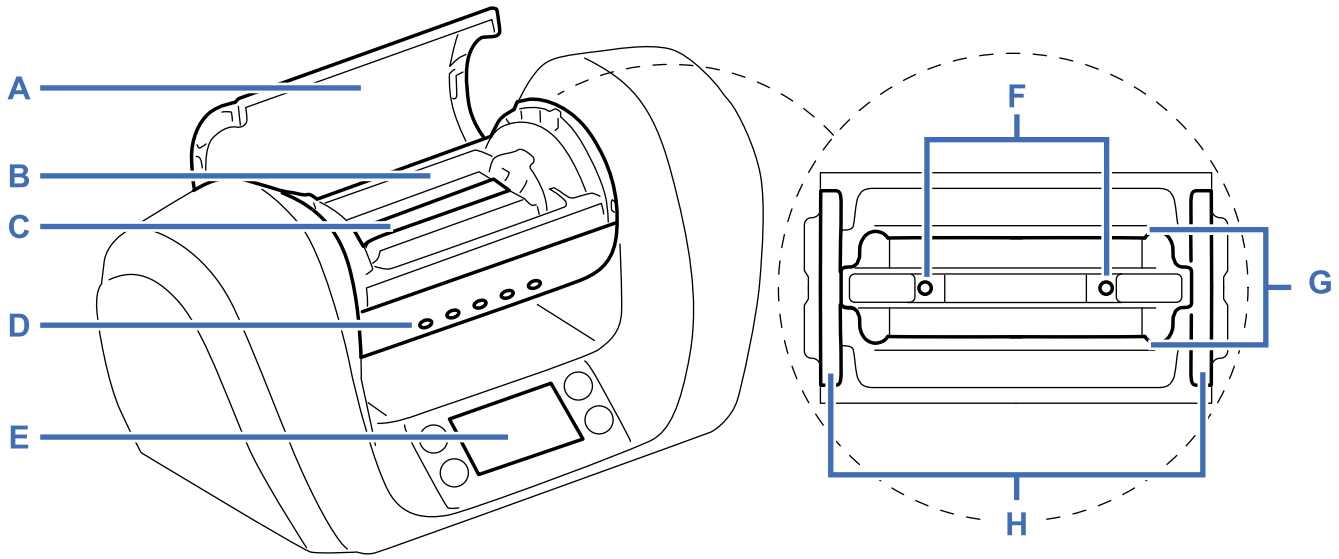

Part	Name	Function
A	**Lid**	• Open and close the rotor chamber. • Protect from moving parts. • Show rotating parts.
B	**Rotor chamber**	• House the rotor. • Protect from moving parts.
C	**Closed holder housing**	House and lock the closed holder.
D	**Information LED**	Signal an anomaly. The anomaly can be solved by the user.
E	**Display**	• Command the instrument. • Indicate the instrument status. • Signals when a problem occurs.
F	**Magnets**	Force the closed holder in position.
G	**Rotor**	Reduce the sample volume.
H	**Chamber lights**	Light up the rotor chamber.

Rear structure

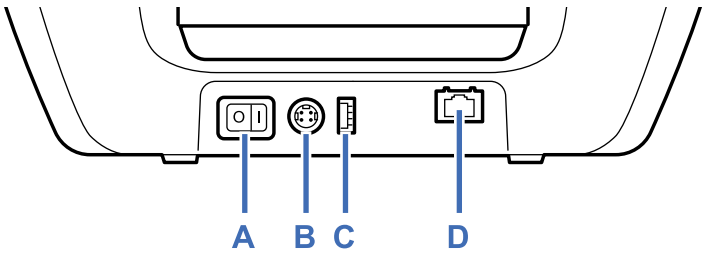

Part	Name	Function
A	**Main power switch**	Turn on and off the instrument.
B	**Power supply socket**	Power the instrument.
C	**USB port**	Update software and programs.
D	**Ethernet port**	Not used

Closed holder structure

Structure

The closed holder is composed of the following parts:

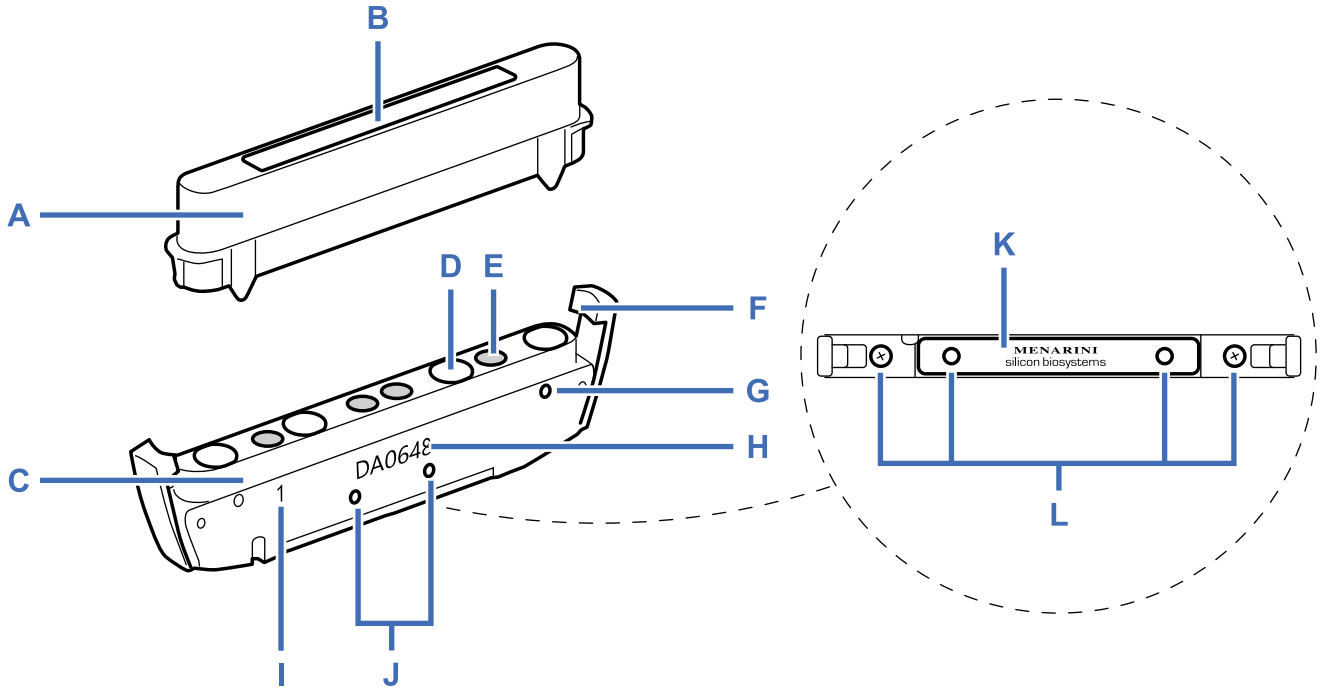

Part	Name	Function
A	**Cap**	Not included. • Close the holder. • Trap the liquid after each run.
B	**Cap RFID tag**	• Identify the cap type. • Guarantee the cap presence and compliance.
C	**Holder**	Contain the tubes.
D	**Cavity for the tube cap**	Align the tube caps.
E	**Slot for the tube**	Contain the tube during the run.
F	**Holder clip**	Fasten the cap to the holder.
G	**Hole for the cap**	Permit the instrument to check the presence of the cap.
H	**Holder identification code**	Identify the holder type.
I	**Number 1**	Provide a reference point for positioning the tubes.
J	**Hole for diagnostic tests**	Perform diagnostic checks on the closed holder.
K	**Holder RFID tag**	• Identify the holder type. • Guarantee the holder presence and compliance.
L	**Holder screw**	Fix the holder RFID tag to guarantee the holder integrity.

GETTING STARTED

Installing the instrument

Precautions for positioning the instrument

***Note**: The safety of any system incorporating the instrument is the responsibility of the system assembler.*

- Use this instrument in a dry and clean environment. The presence of synthetic materials (synthetic clothing, carpets etc.) may cause damaging electrostatic discharges that may lead to erroneous results.
- Do not use this instrument in close proximity to sources of strong electromagnetic radiation (e.g. unshielded intentional RF sources), as these may interfere with the proper operation.
- The electromagnetic environment should be evaluated prior to operation of the instrument.
- Leave about 30 cm of clearance around the instrument in such a way that no obstacle impedes to disconnect its power supply.
- If the reduction or removal process is delicate because of the sample preciousness, install a UPS (Uninterruptible Power Supply). See "Electrical data" on page 41.
- Install the instrument far from heat and sun's rays.
- Place the instrument on a flat surface and far from vibrating devices (for example centrifuge).
- Condensate formation. Keep the instrument at room temperature for at least four hours before turning it on.

Connect the instrument to the power supply

1. Let the instrument warm up to the room temperature.
2. Move the main power switch to OFF.
3. Connect the power cord to the power supply.

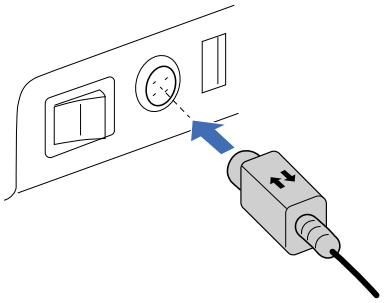

***NOTICE**: Use only the provided power supply and power cord. The use of a different power supply or power cord can damage the instrument. Contact the Menarini Silicon Biosystems Customer Service to order a suitable power supply or power cord.*
Only connect the instrument to voltage sources that correspond to the electrical requirements of the power supply.

4. With the arrows on the locking device facing upwards, insert the power supply plug in the power supply socket.
5. Connect the power cord to the electrical socket.

Basic operations with the instrument

Open/close the rotor chamber

Open the rotor chamber:

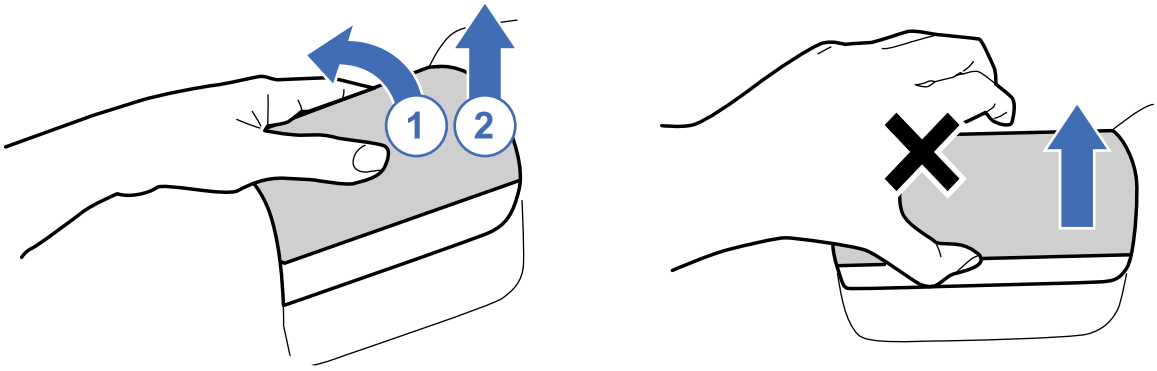

Close the rotor chamber:

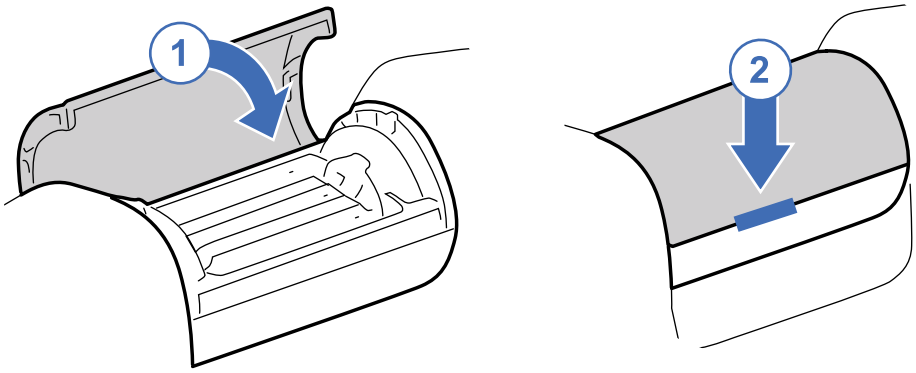

Inspect the instrument

It is important to regularly check the integrity of the instrument and its components.

Specifically, before each use check what follows:

- If the power supply and the power cord are damaged.
- If the lid and the casing are damaged and present relevant scratches or cracks (see "Front structure" on page 14).
- If the magnets in the closed holder housing are loosened.
- If any foreign body is in the rotor chamber or in the closed holder housing.

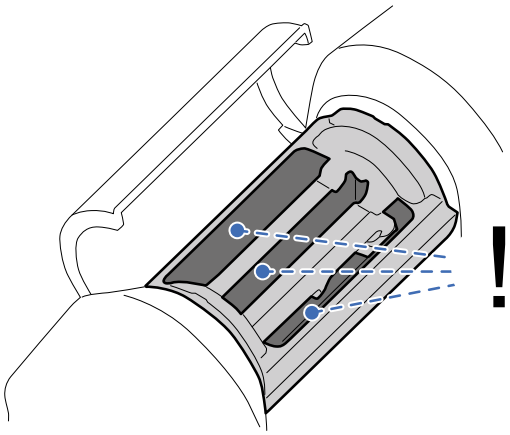

Switch on the instrument

Switch the instrument on using the main power switch in the rear: the instrument performs a self-diagnostic test. During the test, the rotor performs a partial rotation and then goes back to its correct position, while the instrument checks the internal brake functioning.

If no problem or error is detected, the instrument is ready to be used. Otherwise, a message is displayed (see "Errors" on page 37).

***NOTICE**: If the instrument does not work, contact Menarini Silicon Biosystems Technical Support to know the manual procedure for the volume reduction (see "How to contact Technical Support" on page 4).*

Switch off the instrument

***NOTICE**: Check that no closed holder is in the rotor chamber before switching it off.*

Switch the instrument off using the main power switch in the rear at the end of the day or when you plan not to use the instrument for an extended period of time.

Change the display language

Access the menu and choose the desired language (see "Menu" on page 24). This language is used for the current and following sessions.

***Note**: At first access the instrument prompts to set the display language.*

Put the instrument in standby mode

The instrument automatically goes in standby mode if not used for 20 minutes: the display and LEDs turn off and the button backlight weakens.

Exit the standby mode

To exit the standby mode, press whichever button. To run a program selected before the standby mode, confirm it again.

Basic operations with the holder

Inspect the holder/closed holder

To preserve the samples, before using a closed holder check what follows:

- if the holder or the cap are damaged
- if the holder clips and screws are damaged or missing (see "Closed holder structure" on page 15)

Insert the tubes

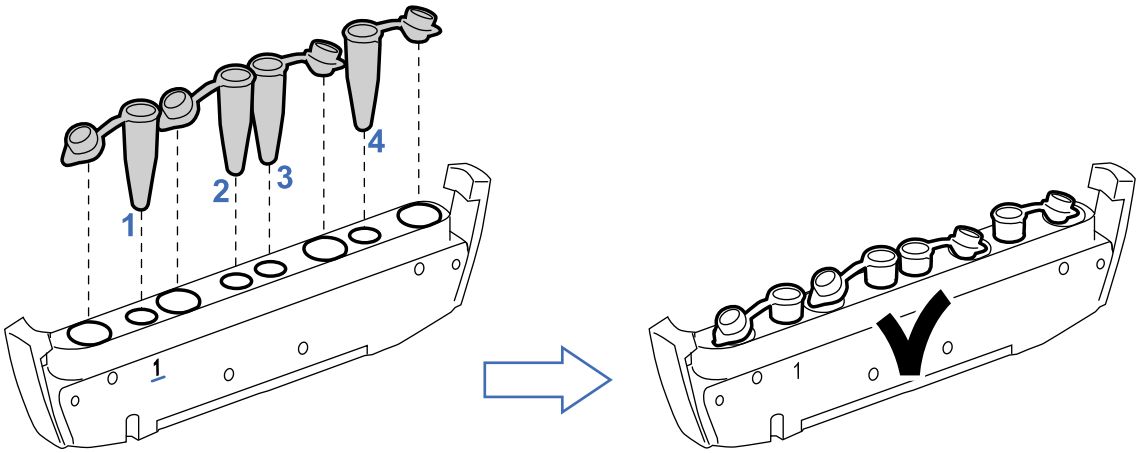

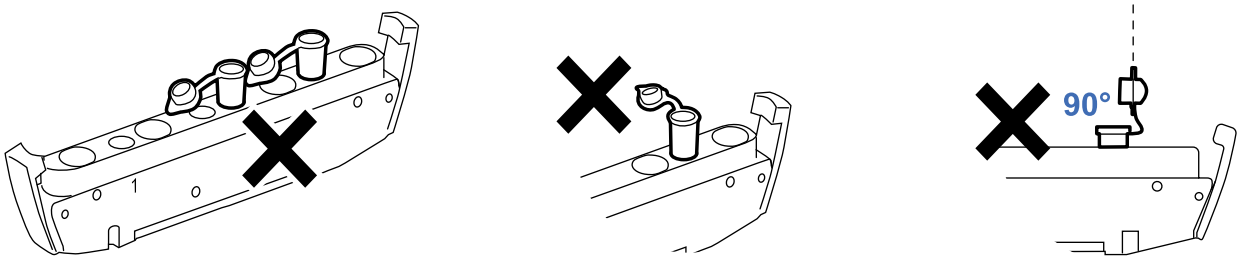

Close the closed holder

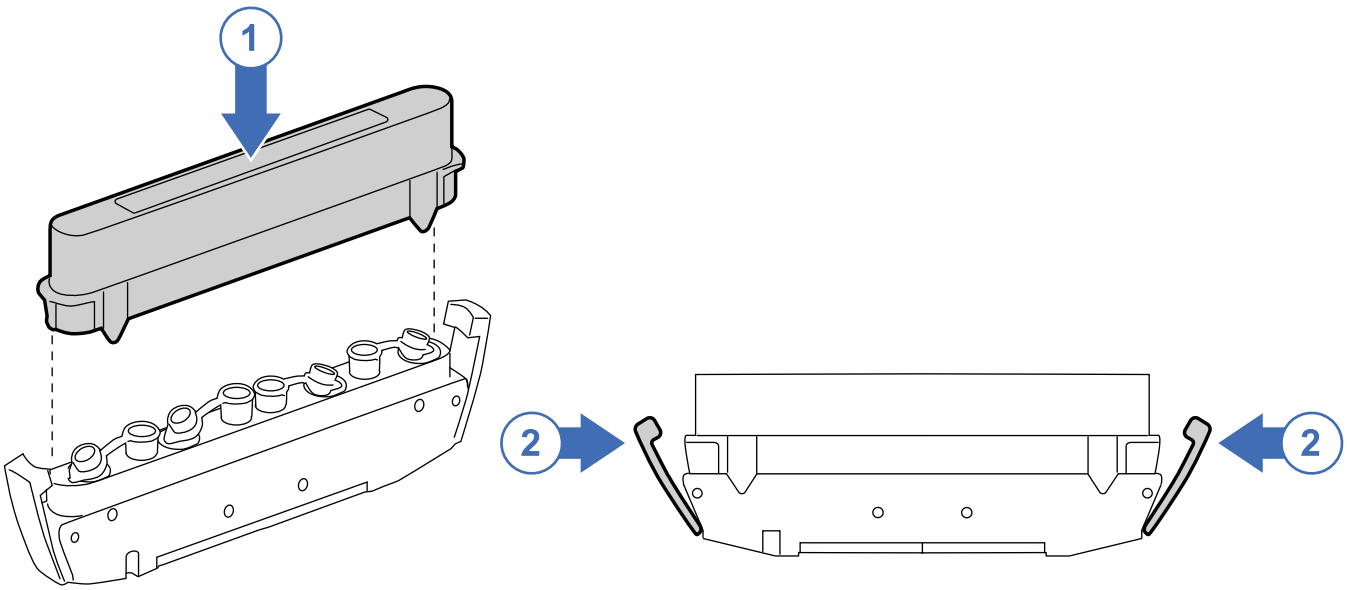

Insert the closed holder in the instrument

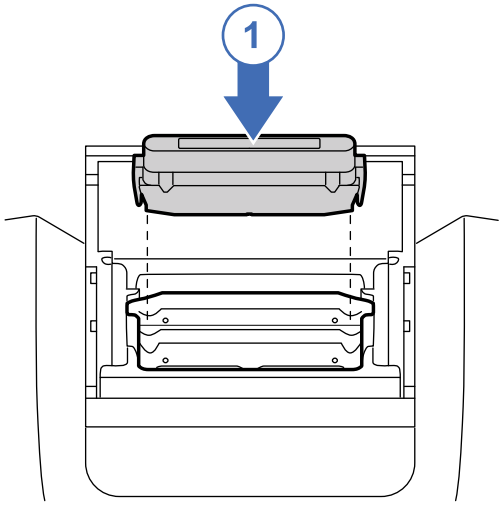

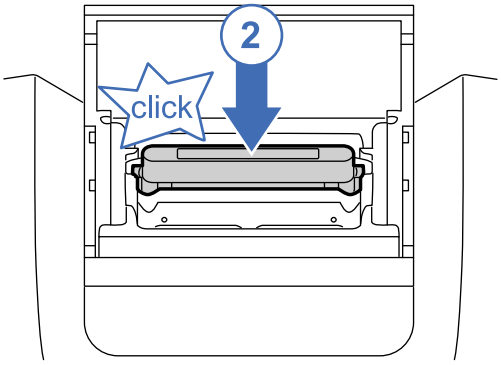

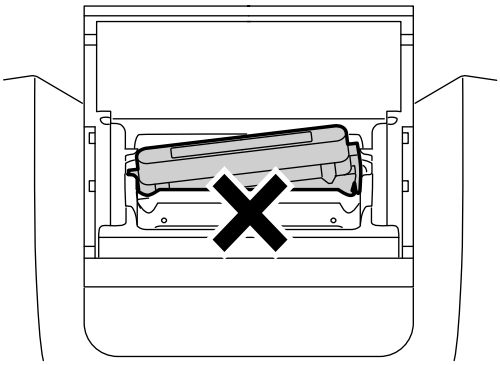

Position the closed holder

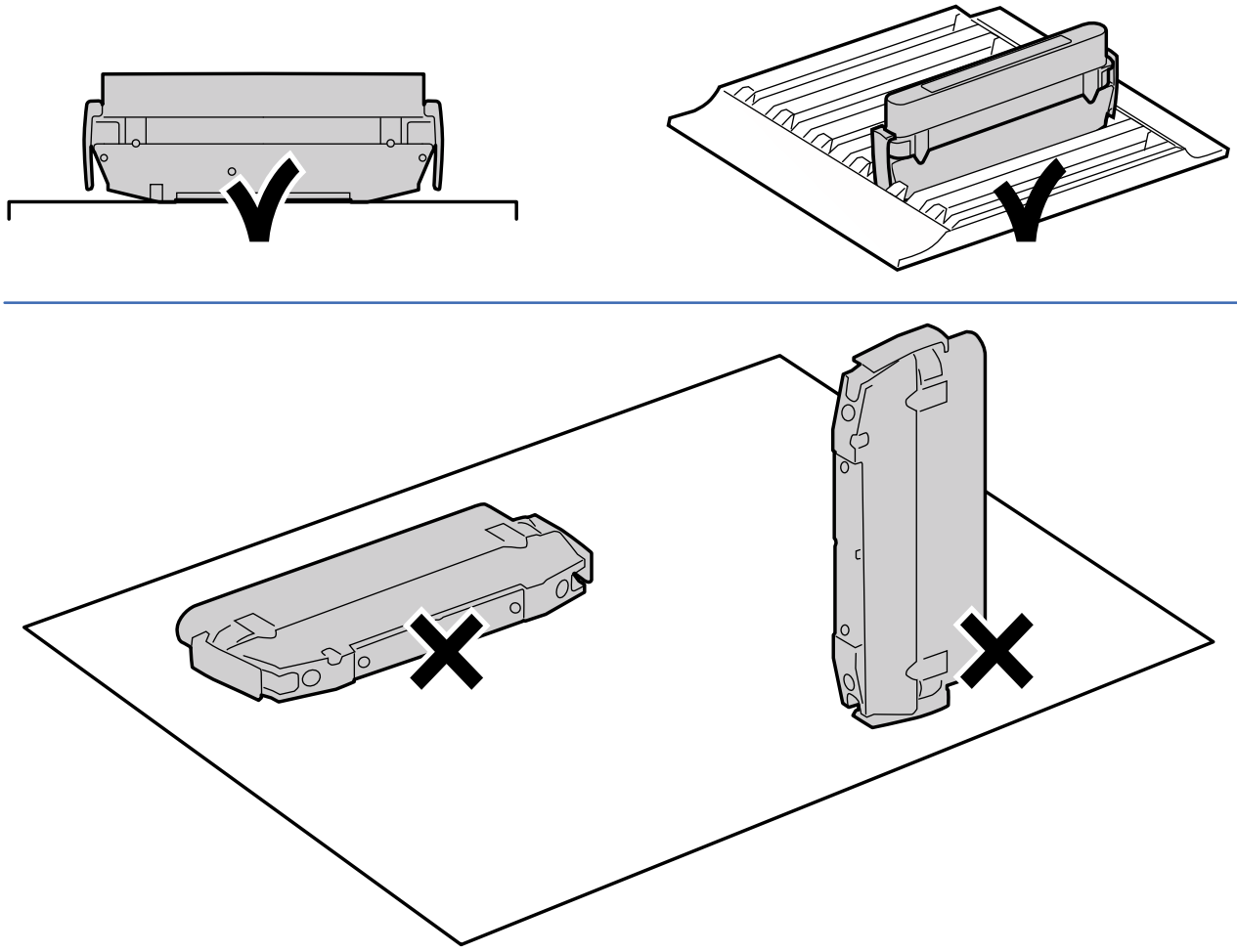

Open the closed holder

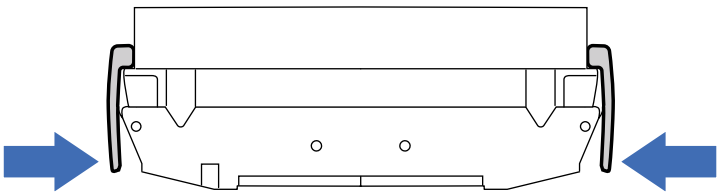

Remove the tubes from the holder

The use of tweezers should prevent contamination of the samples during tubes handling.

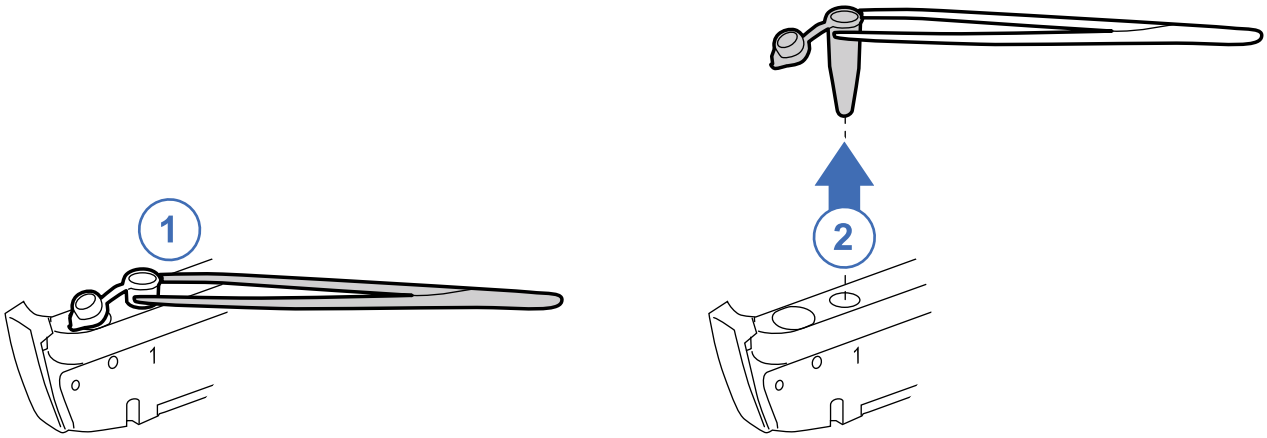

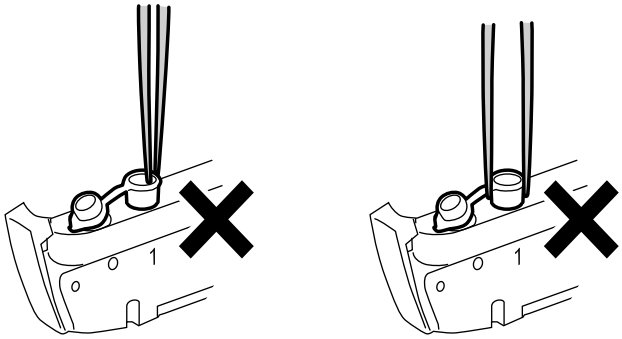

Close the removed tubes

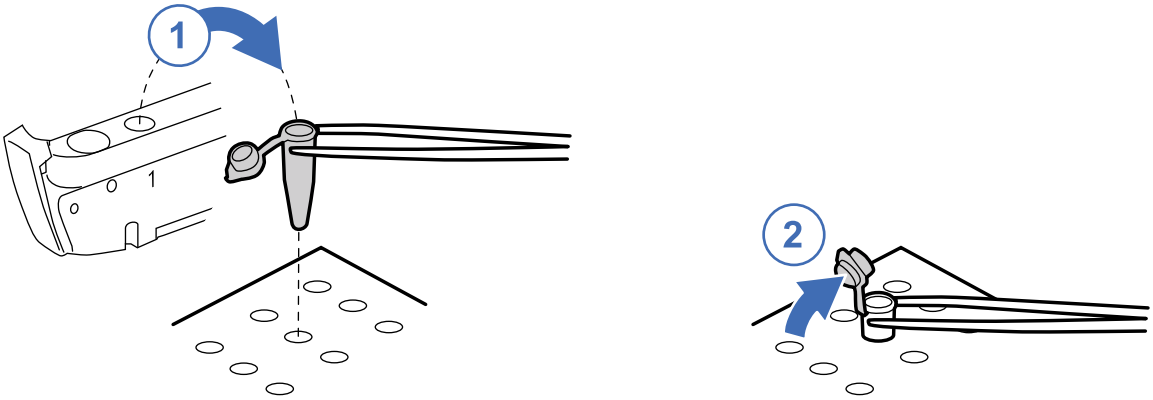

Display description

Available functions

The display allows to do what follows:

- Access the menu and perform a few tasks (for example, choose the display language or turn on the chamber lights).
- Select a processing program.

Display structure

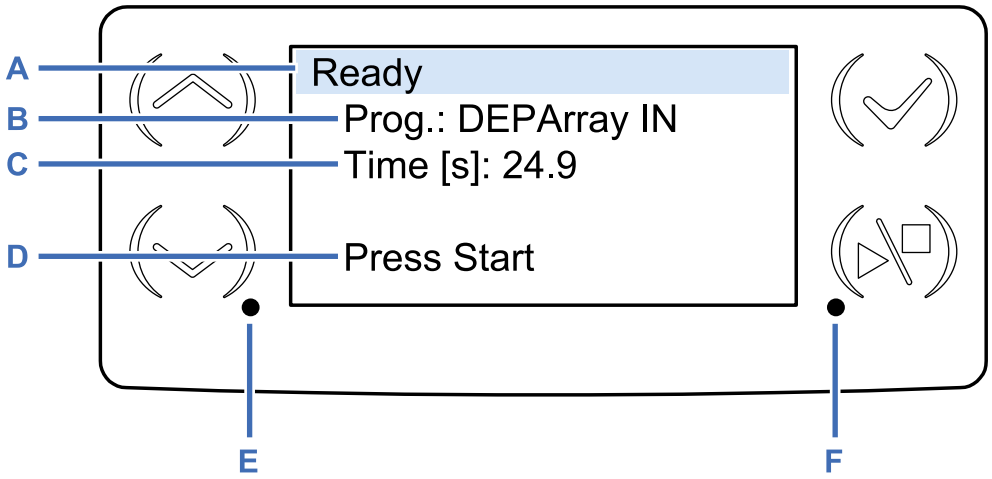

Part	Description
A	Instrument status
B	Program name. In order of appearance: 1. **Low Volume** 2. **High Volume** 3. **DEPArray OUT** 4. **DEPArray IN**
C	Program duration in seconds
D	Action required
E	System-error LED (red): • Steady: power supply problem that requires technical support. • Flashing: general problem that requires technical support.
F	Status LED (green): • Flashing: the instrument is ready to start the program. • Steady: program in progress.

Button functions

Button	Function
⌃ / ⌄	Navigate the interface
✓	• Select an entry • Confirm a program • Turn off the chamber lights, if the **Chamber lights** option is enabled
▶/■	• Start and stop the program • Show more information, if the instrument status is not ready

Menu

You can only access the menu when no program is running on the instrument.

To enter the menu, press (⌃) and (⌄) at the same time for about six seconds.

Entry	Function
Select language	Select the display language.
Unlock lid	Manually unlock the lid when a problem occurs (for example power failure).
Chamber lights	Turn on the chamber lights (for example to verify the absence of foreign bodies or unexpected liquids).
Cleaning	Rotates the rotor 90° to clean the rotor holes.
System info	Provide information about the software version.
Update	Update software and programs from a USB flash drive.
Exit	Exit the menu.

OPERATING WITH VR NxT

Process for general purposes

Workflow for volume reduction to 13.5 or 12.5 µl (High Volume)

The workflow is the following:

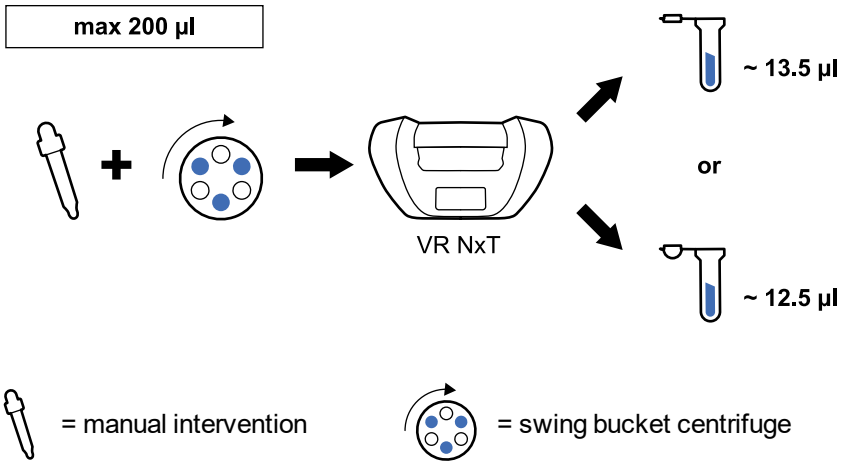

Workflow for volume reduction to 3 or 2 µl (Low Volume)

The workflow is the following:

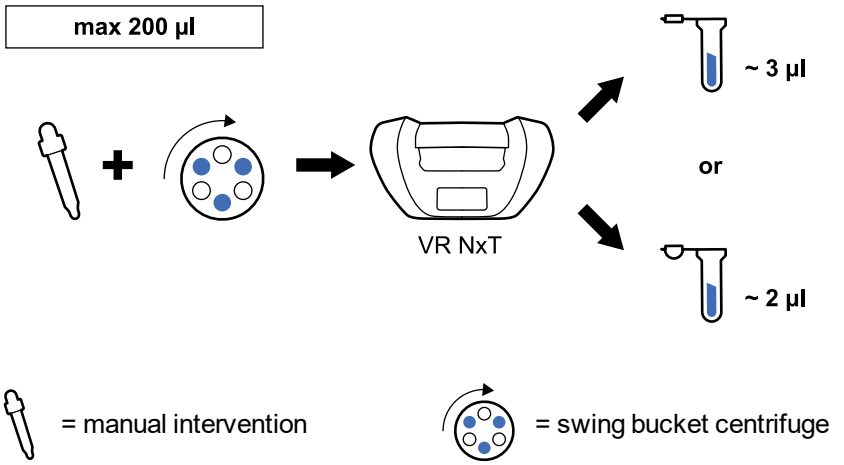

Process for using DEPArray

Workflow for volume reduction to 12.5 µl (DEPArray IN)

The workflow is the following:

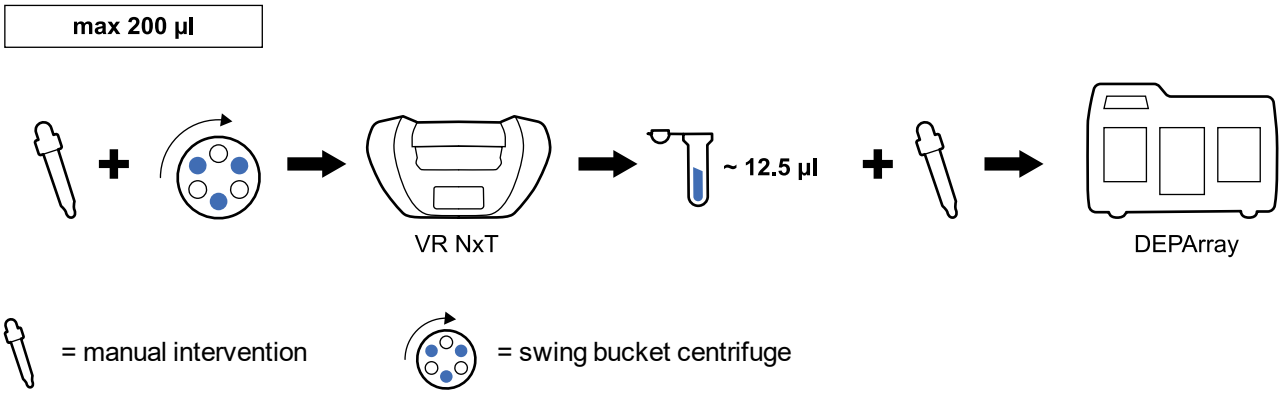

Workflow for volume reduction to 2 µl (DEPArray OUT)

The workflow is the following:

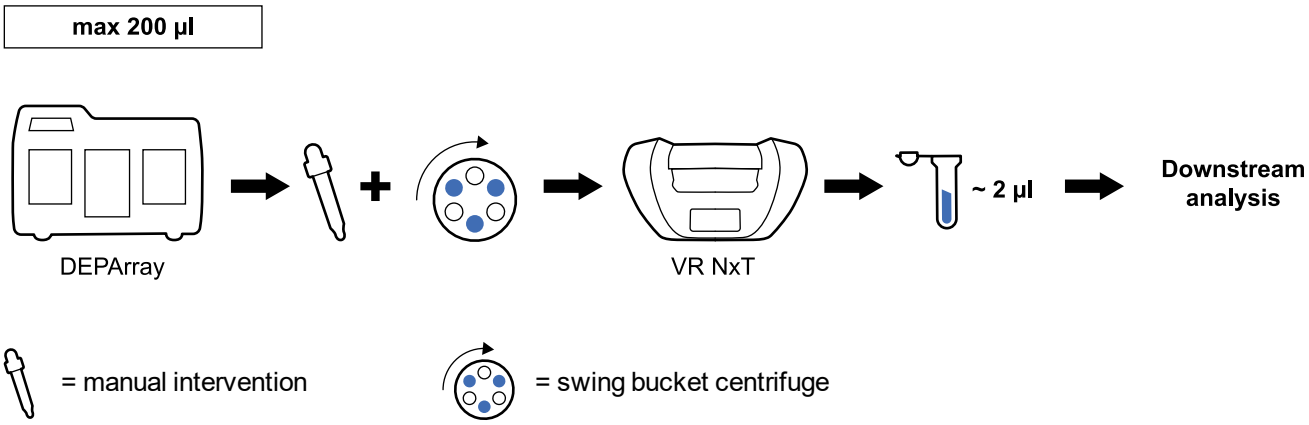

Programs

Available programs

The available programs are the following:

- For general purposes: High Volume and Low Volume.
- For using DEPArray: DEPArray IN and DEPArray OUT.

Compatible tubes

***NOTICE**: The composition and geometry of the sample container could influence the results of the volume reduction.*

The instrument is compatible with the most common 200 µl PCR tubes. Menarini Silicon Biosystems tests the standard PCR tubes MicroAmp Reaction Tube with cap and MAXYMum Recovery Thin Wall PCR Tube with flat cap for the compatibility with the instrument.

Please comply with the following table to obtain the volumes indicated in this Instruction Manual.

Program	MicroAmp Reaction Tube with cap	MAXYMum Recovery Thin Wall PCR Tube with flat cap
for general purposes	✓	✓
for using DEPArray	✓	✗

Programs for general purposes: sample characteristics

***NOTICE**: The correct trap of the liquid in the cap is guaranteed only if the input sample volume is respected.*

***NOTICE**: The output sample volume is guaranteed only if the sample does not contain bubbles.*

The following table shows the characteristics of the samples for each program intended for general purposes.

Program name	MicroAmp Reaction Tube with cap				MAXYMum Recovery Thin Wall PCR Tube with flat cap				Holder required
	Input volume	Number of cells	Buffer composition	Output volume	Input volume	Number of cells	Buffer composition	Output volume	
High Volume	max 200 µl	≤ 100,000	• DABUF or • RPMI or • DMEM or • F12K or • Running Buffer	~12.5 µl	max 200 µl	≤ 100,000	• DABUF or • Running Buffer or • RPMI or • DMEM or • F12K	~13.5 µl	DA0644 + DA0649
Low Volume		≤ 1,000	• DABUF or • Running Buffer or • RPMI or • DMEM or • F12K	~2 µl		≤ 10,000	• DABUF or • Running Buffer or • RPMI or • DMEM or • F12K	~3 µl	DA0644 + DA0648

Programs for using DEPArray: sample characteristics

***NOTICE**: The correct trap of the liquid in the cap is guaranteed only if the input sample volume is respected.*

***NOTICE**: The output sample volume is guaranteed only if the sample does not contain bubbles.*

The following table shows the characteristics of the samples for each program intended for using DEPArray.

Program name	MicroAmp Reaction Tube with cap				Holder required
	Input volume	Number of cells	Buffer composition	Output volume	
DEPArray IN	max 200 µl	≤ 40,000	• DABUF or • RPMI with 10% FBS or • DMEM with 10% FBS or • F12K with 10% FBS	~12.5 µl	DA0644 + DA0649
DEPArray OUT	max 200 µl	≤ 507 fixed cells	DABUF and 1X PBS (PBS concentration range 72-88%)	~2 µl	DA0644 + DA0648
		≤ 85 live cells	1X PBS (PBS concentration range 85-88%) and one of the following buffer: • RPMI with 10% FBS or • DMEM with 10% FBS or • F12K with 10% FBS		

Volume reduction to 13.5 or 12.5 µl

Warnings

- **Do not lean on the instrument.**
- **Do not stay longer than necessary within the 30 cm of clearance from the instrument.**
- **Do not deposit any potentially hazardous material within the 30 cm of clearance from the instrument.**

Notices about the input sample

***NOTICE**: Avoid inserting samples with bubbles in VR NxT. In case of bubbles, the output sample volume is not guaranteed (see "Troubleshooting" on page 37 to solve the problem).*

***NOTICE**: The samples to be inserted in VR NxT must have been processed using a swing bucket upstream centrifuge with plates.*

***NOTICE**: If the sample to be processed comes from CELLSEARCH, see "Prepare the CELLSEARCH sample for DEPArray with VR NxT" on page 45 to prepare it for VR NxT.*

Prepare the closed holder

CAUTION! To guarantee correct sample processing, only use VR NxT holder and cap and inspect them before the use (see "Inspect the holder/closed holder" on page 18).

1. Once centrifuged, place the samples under the biosafety cabinet class II.
2. Place the Blue holder (DA0649) in the holder rack (see "Position the closed holder" on page 21).

3. Place the holder rack with the holder under the biosafety cabinet class II.
4. Open the tubes and insert them in the holder one at a time. Start from number 1 position indicated on the holder.
5. Insert each tube cap in its tube cap cavity to align them (see "Insert the tubes" on page 19).
6. Put a new cap on the holder and push the holder clips to close the holder.
   ***NOTICE**: Do not remove, damage or write on the RFID tag of the cap. A cap without the RFID tag or with an unreadable RFID tag is unserviceable.*
7. Ensure the closed holder to be inserted perfectly in the holder rack.

Load VR NxT

1. Place the rack with the closed holder on a flat surface next to the instrument.
2. If the instrument is off, press the main power switch to turn it on: the instrument performs a self-diagnostic test.
3. Open the rotor chamber.
4. Ensure there is no foreign body in the rotor chamber (see "Inspect the instrument" on page 17).
5. Insert the closed holder in its housing and push it down until it clicks (see"Insert the closed holder in the instrument" on page 20).
6. Close the rotor chamber.

Reduce the volume to 13.5 or 12.5 µl

***NOTICE**: Before starting the program, please make sure to read the available stop procedures (see "Stop the volume reduction process" on page 31).*

1. Act as follows:

If you are reducing the sample volume...	Then...	And display...
for general purposes	press (⌃) or (⌄)	**High Volume**
for using DEPArray		**DEPArray IN**

2. Press (✓) to confirm the program: the instrument performs an internal check.
3. If **Ready** appears and the status LED flashes, press (▶■) to start the program: the status LED turns steady. If **Not ready** appears and the status LED is off, press (▶■) for more information and solve the problem.
4. At the end of the program, open the rotor chamber.
   ***NOTICE**: Do not open the rotor chamber while the program is running and the status LED is steady.*
5. Move the closed holder in the holder rack.
6. Close the rotor chamber.
7. Move the holder rack with the closed holder under the biosafety cabinet class II.
8. Push the bottom of the holder clips to open the closed holder.
9. Lift the cap and throw it in the biohazard waste disposal container.
   ***NOTICE**: To avoid the liquid leakage, handle the cap with care.*

   ***Note**: A small liquid drop may be present out of the tube (e.g. see the image below). In this case, the output volume is guaranteed anyway.*

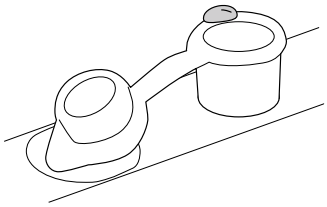

10. Take each tube with the tweezers (see "Remove the tubes from the holder" on page 22), move it to a common tube storage rack and close it (see "Close the removed tubes" on page 22).

    ***Note**: For the DEPArray NxT, resuspend the sample and load it in the DEPArray NxT cartridge. For DEPArray V2, add 1 µl of manipulation buffer, resuspend the sample and load it in the DEPArray V2 cartridge.*

Volume reduction to 3 or 2 µl

Warnings

- **Do not lean on the instrument.**
- **Do not stay longer than necessary within the 30 cm of clearance from the instrument.**
- **Do not deposit any potentially hazardous material within the 30 cm of clearance from the instrument.**

Notices about the input sample

***NOTICE**: Avoid inserting samples with bubbles in VR NxT. In case of bubbles, the output sample volume is not guaranteed (see "Troubleshooting" on page 37 to solve the problem).*

***NOTICE**: The samples to be inserted in VR NxT must have been processed using a swing bucket upstream centrifuge with plates.*

***NOTICE**: If the sample to be processed comes from DEPArray, see "Prepare the DEPArray recoveries for downstream genetic analysis with VR NxT" on page 48 to prepare it for VR NxT.*

Prepare the closed holder

CAUTION! To guarantee correct sample processing, only use VR NxT holder and cap and inspect them before the use (see "Inspect the holder/closed holder" on page 18).

1. Once centrifuged, place the samples under the biosafety cabinet class II.
2. Place the Gray holder (DA0648) in the holder rack (see "Position the closed holder" on page 21).
3. Place the holder rack with the holder under the biosafety cabinet class II.
4. Open the tubes and insert them in the holder one at a time. Start from number 1 position indicated on the holder.
5. Insert each tube cap in its tube cap cavity to align them (see "Insert the tubes" on page 19).
6. Put a new cap on the holder and push the holder clips to close the holder.
   ***NOTICE**: Do not remove, damage or write on the RFID tag of the cap. A cap without the RFID tag or with an unreadable RFID tag is unserviceable.*
7. Ensure the closed holder to be inserted perfectly in the holder rack.

Load VR NxT

1. Place the rack with the closed holder on a flat surface next to the instrument.
2. If the instrument is off, press the main power switch to turn it on: the instrument performs a self-diagnostic test.
3. Open the rotor chamber.
4. Ensure there is no foreign body in the rotor chamber (see "Inspect the instrument" on page 17).
5. Insert the closed holder in its housing and push it down until it clicks (see"Insert the closed holder in the instrument" on page 20).
6. Close the rotor chamber.

Reduce the volume to 3 or 2 µl

***NOTICE**: Before starting the program, please make sure to read the available stop procedures (see "Stop the volume reduction process" on the facing page).*

1. Act as follows:

If you are reducing the sample volume...	Then...	And display...
for general purposes	press (⌃) or (⌄)	**Low Volume**
for using DEPArray		**DEPArray OUT**

2. Press (✓) to confirm the program: the instrument performs an internal check.
3. If **Ready** appears and the status LED flashes, press (▶■) to start the program: the status LED turns steady. If **Not ready** appears and the status LED is off, press (▶■) for more information and solve the problem.

4. At the end of the program, open the rotor chamber.
   ***NOTICE**: Do not open the rotor chamber while the program is running and the status LED is steady.*
5. Move the closed holder in the holder rack.
6. Close the rotor chamber.
7. Move the holder rack with the closed holder under the biosafety cabinet class II.
8. Push the bottom of the holder clips to open the closed holder.
9. Lift the cap and throw it in the biohazard waste disposal container.
   ***NOTICE**: To avoid the liquid leakage, handle the cap with care.*

   ***Note**: A small liquid drop may be present out of the tube (e.g. see the image below). In this case, the output volume is guaranteed anyway.*

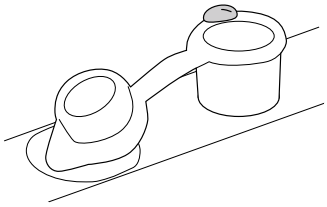

10. Take each tube with the tweezers (see "Remove the tubes from the holder" on page 22), move it to a common tube storage rack and close it (see "Close the removed tubes" on page 22).

Stop the volume reduction process

Stop manner and consequences

***NOTICE**: When you stop a process prior to completion, the volume reduction could be insufficient.*

During sample processing two kinds of stops are possible: the controlled stop and the quick stop. After both stops, the sample recovery procedure must be performed (see "Recover the samples" on the next page).

The stop manner characteristics are the following:

Stop manner	When it is necessary	What happens	Consequences
Controlled stop	You realize the samples in the closed holder have not been prepared properly.	The rotor slows down gently and stops with the closed holder in the correct position.	Samples are preserved and the closed holder can be easily removed.
Quick stop	• A malfunction occurs (for example, the instrument jumps or makes a strange noise). • You notice an anomaly in the rotor chamber (for example, the closed holder opens accidentally).	The rotor stops immediately with the closed holder in its current position.	If the closed holder is in a wrong position, it cannot be easily removed. The instrument will try to move the closed holder in the correct position at the next start. ***NOTICE**: Sample could be lost.*

Perform a controlled stop

To stop the rotor gently, press (▶\■).

***NOTICE**: Before opening the rotor chamber, check from the transparent lid if the rotating parts have completely stopped.*

Perform a quick stop

To stop the rotor immediately, choose one of the following solutions:

- Turn off the main power switch.
- Unplug the power supply from the instrument (see "Stop the volume reduction process" on the previous page) pulling the locking device backwards.

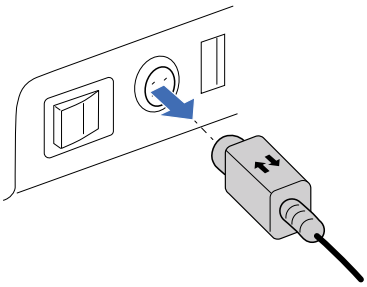

- Unplug the power cord from the electrical socket.

Recover the samples

To reprocess the samples contained in the instrument at the time of the stop, act as follows:

1. If you performed a quick stop, restore the initial situation as follows:

If you...	Then...
turned off the main power switch	turn on the main power switch: the instrument performs a self-diagnostic test.
unplugged the power supply from the instrument	plug the power supply: the instrument performs a self-diagnostic test.
unplugged the power cord from the electrical socket	plug the power cord in the electrical socket: the instrument performs a self-diagnostic test.

2. Open the rotor chamber.
3. Move the closed holder in the holder rack and then under the biosafety cabinet class II.
4. Push the bottom of the holder clips to open the closed holder.
5. Lift the cap and throw it in the biohazard waste disposal container.
6. Check the sample volume and act as follows:

If the sample volume is similar to...	And you want to reduce the volume...	Then...
its starting level	to ~13.5 or ~12.5 µl	see "Reduce the volume to 13.5 or 12.5 µl if the volume is similar to the starting level" on the facing page
	to ~3 or ~2 µl	see "Reduce the volume to 3 or 2 µl if the volume is similar to the starting level" on the facing page
the intended final level	to ~13.5 or ~12.5 µl	see "Reduce the volume to 13.5 or 12.5 µl if the volume is similar to the intended final level" on the facing page
	to ~3 or ~2 µl	see "Reduce the volume to 3 or 2 µl if the volume is similar to the intended final level" on the facing page

Reduce the volume to 13.5 or 12.5 µl if the volume is similar to the starting level

1. Take each tube with the tweezers (see "Remove the tubes from the holder" on page 22), move it to a common tube storage rack and close it (see "Close the removed tubes" on page 22).
2. Move the tubes in the centrifuge racks.
3. Centrifuge the tubes using a swing bucket centrifuge.
4. "Prepare the closed holder" on page 28.
5. "Load VR NxT" on page 29.
6. "Reduce the volume to 13.5 or 12.5 µl" on page 29.

Reduce the volume to 3 or 2 µl if the volume is similar to the starting level

1. Take each tube with the tweezers (see "Remove the tubes from the holder" on page 22), move it to a common tube storage rack and close it (see "Close the removed tubes" on page 22).
2. Move the tubes in the centrifuge racks.
3. Centrifuge the tubes using a swing bucket centrifuge.
4. "Prepare the closed holder" on page 30.
5. "Load VR NxT" on page 30.
6. "Reduce the volume to 3 or 2 µl" on page 30.

Reduce the volume to 13.5 or 12.5 µl if the volume is similar to the intended final level

1. Take each tube with the tweezers (see "Remove the tubes from the holder" on page 22), move it to a common tube storage rack and close it (see "Close the removed tubes" on page 22).
2. Move the tubes in the centrifuge racks.
3. Centrifuge the tubes using a swing bucket centrifuge.
4. Move the tubes under the biosafety cabinet class II.
5. Add 100 µl of manipulation buffer (see "Permitted buffers for processing" on page 40).
6. Centrifuge the tube again using a swing bucket centrifuge.
7. "Prepare the closed holder" on page 28.
8. "Load VR NxT" on page 29.
9. "Reduce the volume to 13.5 or 12.5 µl" on page 29.

Reduce the volume to 3 or 2 µl if the volume is similar to the intended final level

1. Take each tube with the tweezers (see "Remove the tubes from the holder" on page 22), move it to a common tube storage rack and close it (see "Close the removed tubes" on page 22).
2. Move the tubes in the centrifuge racks.
3. Centrifuge the tubes using a swing bucket centrifuge.
4. Move the tubes under the biosafety cabinet class II.
5. Insert 100 µl of 1X PBS in each tube with a pipette and close the tubes.
6. Insert the centrifuge racks in the swing bucket upstream centrifuge.
7. Centrifuge the sample using a swing bucket centrifuge: the sample is now ready for the volume reduction to ~2 µl.
8. "Prepare the closed holder" on page 30.
9. "Load VR NxT" on page 30.
10. "Reduce the volume to 3 or 2 µl" on page 30.

MAINTENANCE OF THE INSTRUMENT

Cleaning

Precautions

- Particularly aggressive detergents can damage casing and lid. These detergents can crack the plastic, bleach and/or soften the material.
- Before using any cleaning or decontamination methods except those recommended by Menarini Silicon Biosystems, check with Menarini Silicon Biosystems itself that the proposed method will not damage the equipment.
- Cleaning and decontamination may be necessary as a safeguard before instrument, holder and any accessories are maintained, repaired or transferred. Menarini Silicon Biosystems may provide a format for users to document that such treatment has been carried out.
- The bottom of the closed holder housing is the contact element that guarantees the closed holder correct positioning. Keep it clean.
- Do not autoclave the instrument or the accessories.
- Do not expose the instrument to UV, beta, gamma, or any other high-energy radiation for disinfection.
- Throw swabs and brushes away after each use.

Cleaning frequency

Clean the instrument and all its components regularly, and especially in the following conditions:

- if they are visibly dirty
- in case of liquid spillage from the closed holder in the rotor chamber
- before sending them back for technical support or substitution

In normal conditions, the internal parts of the rotor chamber, the rotor holes and the holders should be cleaned at least after having used 72 caps.

Material required for cleaning

***Note**: Contact Technical Support for any doubt about cleaning and decontamination.*

- Gloves
- Thermo Scientific DNA AWAY surface decontaminant
- 70% Ethanol solution
- One hole brush
- Two double-head swabs (included in the cap box)
- Two lint-free clothes

***NOTICE**: When using any chemical detergent, strictly follow the manufacturer instructions and the Material Safety Data Sheet.*

Clean VR NxT

1. Switch off the instrument and disconnect it from the power supply.
2. Wear gloves.
3. Clean the instrument surfaces with a damp lint-free cloth.
4. Put the DNA AWAY on the cloth and clean the instrument surfaces again.
5. Prepare a solution made of water and a 70% Ethanol solution.
6. Use this solution on another damp lint-free cloth to clean the instrument surfaces again to remove any residue of DNA AWAY.
7. Let the instrument dry.

Clean the rotor holes

1. If present, remove the closed holder from the closed holder housing and close the rotor chamber.
2. Press (^) and (✓) simultaneously for about 6 seconds to enter the menu.
3. Select **Cleaning**: the rotor rotates of 90°.
4. Switch off the instrument and disconnect it from the power supply.

5. Open the rotor chamber and clean the four rotor holes with the hole brush. Reagents are not required.

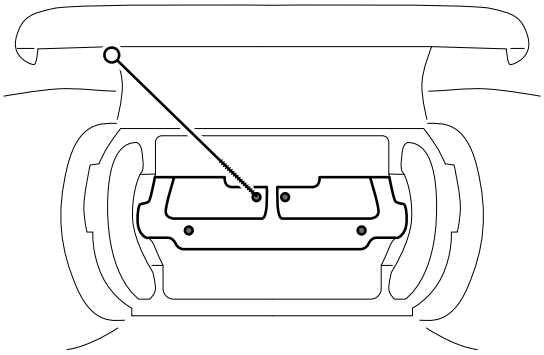

6. Close the rotor chamber.
7. To move the rotor back in its correct position, connect the instrument to the power supply and switch it on.

Clean the internal parts of the rotor chamber

1. Switch off the instrument and disconnect it from the power supply.
2. Wear gloves.
3. Open the lid.
4. Remove any foreign body from the rotor chamber.
5. Put the DNA AWAY on a swab large head.
6. Use the swab large head to clean the bottom of the closed holder housing and the internal surfaces of the rotor chamber.

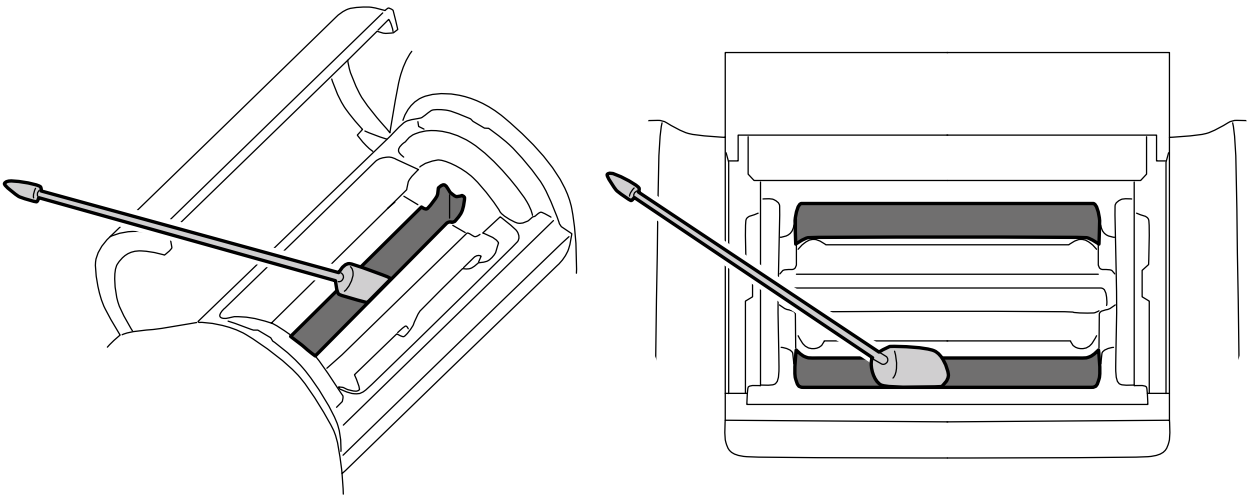

7. Prepare a solution made of water and a 70% Ethanol solution and put it on another swab large head.
8. Use this swab large head to remove any residue of DNA AWAY from the bottom of the closed holder housing and the internal surfaces of the rotor chamber.
9. Let the instrument dry.

Clean the holder

***NOTICE**: The holder is not waterproof. Do not submerge in liquids.*

1. Wear gloves.
2. Put the DNA AWAY on a swab small head.

3. Use the swab small head to clean the internal part of the holder.

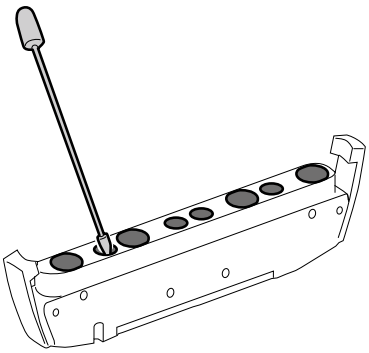

4. Prepare a solution made of water and a 70% Ethanol solution and put it on another swab small head.
5. Use this swab small head to remove any residue of DNA AWAY from the holder internal part.
6. Clean the holes with the hole brush.

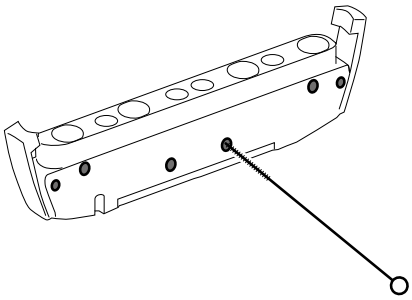

7. Clean the holder surface with a damp lint-free cloth.
8. Put the DNA AWAY on the cloth and clean the holder surface again.
9. Put the solution made of water and a 70% Ethanol solution on another damp lint-free cloth.
10. Use this lint-free cloth to remove any residue of DNA AWAY from the holder surface.
11. Let the holder dry.

Software and program update

Update management

Menarini Silicon Biosystems will deliver the USB flash drive with the updated software or programs when available.

Update software and programs

1. Insert the USB flash drive in the USB port.
2. Press (⌃) and (⌄) simultaneously for about 6 seconds to enter the menu.
3. Select **Update**: the update starts automatically.
4. Wait until the end of the update: the instrument restarts automatically.
5. Remove the USB flash drive.

Maintenance

In case of damage or malfunction, contact Menarini Silicon Biosystems (see "How to contact Technical Support" on page 4). The instrument and its components cannot be repaired by the user (see "Assistance" on page 4).

Instrument lifetime

The instrument has a lifetime of seven years. After seven years, it shall be reconditioned. Ask to Technical Support for instrument reconditioning (see "How to contact Technical Support" on page 4).

TROUBLESHOOTING AND ERRORS

Troubleshooting

Situation	What to do
There is a bubble in the sample.	1. Centrifuge the sample. 2. Try to aspirate the bubble with a pipette.
The instrument shakes/makes unusual noise when turned on.	1. Stop the instrument (see "Stop the volume reduction process" on page 31). 2. Check if the following condition are respected: ◦ absence of foreign bodies and liquids in the rotor chamber and on the lid ◦ integrity and correct positioning of the closed holder ◦ rotor well fixed ◦ the instrument is placed on a flat surface
Not ready is displayed and the status LED is off.	1. Press (▶\■) for more information about the problem. 2. Solve the problem (see "Error codes" on the next page).
A malfunction occurs/something went wrong in the rotor chamber.	Check if the following condition are respected: • absence of foreign bodies and liquids in the rotor chamber and on the lid • integrity and correct positioning of the closed holder • rotor well fixed If necessary, contact Technical Support (see "How to contact Technical Support" on page 4).
Anomalies in the VR NxT functioning.	Perform a diagnostic test (see "Errors" below).
The program has not come to an end because of an accidental or quick shutdown.	See "Recover the samples" on page 32.
The error status light is red without a displayed error.	Contact Technical Support (see "How to contact Technical Support" on page 4).
The display is off	Check what follows: • the main power switch • the mains connections • the mains fuse of the laboratory
The lid is locked	1. Press (∧) and (∨) at the same time for about six seconds to enter the menu. 2. Select **Unlock lid**.
Power failure during a process	1. Turn on the main power switch: the instrument performs a self-diagnostic test. 2. Follow the recovery procedure (see "Recover the samples" on page 32).
After a shutdown, the instrument does not work.	Reduce or remove the supernatant manually. Please contact Technical Support to receive information about the manual procedure (see "How to contact Technical Support" on page 4).

Errors

Error detection

The instrument automatically performs a self-diagnostic test every time it is turned on and after 120 consecutive cycles. When an error is detected, its identification code is displayed. For a complete list of error codes and solutions, see "Error codes" on the next page.

Perform a VR NxT diagnostic test

1. Ensure no closed holder is in the closed holder housing.
2. Turn on the instrument: the self-diagnostic test starts automatically.

When errors cannot be solved

Please contact Technical Support (see "How to contact Technical Support" on page 4).

Error codes

Below is a list of error codes that can be displayed, together with a description of what might have caused them and a possible solution.

To contact Technical Support, see "How to contact Technical Support" on page 4.

Code	Cause	Solution
ED001	-	Contact Technical Support.
ED002		
ED003		
ED004		
ED005		
ED006	Closed holder sensors failure	1. Clean the rotor holes (see "Clean the rotor holes" on page 34). 2. If the problem persists, contact Technical Support.
ED007	-	Contact Technical Support.
ED008		
ED009		
ED010		
ED012		
ED013		
ED014	Initialization has failed.	Contact Technical Support.
ED015	-	Contact Technical Support.
ED016	No closed holder inserted	Insert the closed holder in its housing.
ED017	No cap inserted	1. Remove the holder. 2. Put the cap on the holder and push the holder clips to close the holder. 3. Insert the closed holder in the closed holder housing.
ED018	No holder inserted	1. Remove the cap. 2. Put a new cap on the holder and push the holder clips to close the holder. 3. Insert the closed holder in the closed holder housing.
ED019	Cap already used	Dispose of the cap and use a new one.
ED020	Unusable/damaged cap	
ED021	Out of range ambient temperature	Wait until the ambient temperature is within the range.
ED022	Program corrupted	Contact Technical Support.
ED024	The samples have not been correctly processed due to a manual interruption.	Restart sample processing or perform the recovery procedure (see "Recover the samples" on page 32).
ED025	The number of cycles performed by the holder is equal to or over the threshold.	Dispose of the holder and use a new one.
ED026	The selected program is not compatible with the inserted closed holder.	1. Read the holder identification code to check the correctness of the holder. 2. Select the correct program or change the holder and repeat processing.
ED027	Software update in progress	Wait until the end of the update.

Code	Cause	Solution
ED028	Rotor not aligned	1. Ensure no foreign body is in the rotor chamber. 2. Turn off and on the instrument. 3. If the problem persists, contact Technical Support.
ED029	Closed holder not correctly inserted	1. Remove and check the closed holder. 2. Insert the closed holder again in its housing and push it down until it clicks.
ED030	Lid lock/unlock failure	1. Close the rotor chamber. 2. Turn off and on the instrument. 3. If the problem persists, contact the technical support.
ED031	At the end of the process, the closed holder housing has not reached the right position.	1. Turn off and on the instrument. 2. If the problem persists, contact Technical Support.
ED032	RFID comunication problem	1. Turn off and on the instrument. 2. If the problem persists, contact Technical Support.
ED033	The samples have not been correctly processed due to an out of range rotor speed during the process.	Restart sample processing or perform the recovery procedure (see "Recover the samples" on page 32).

TECHNICAL FEATURES

Technical data

Features

Throughput (cycle time)	• DEPArray IN and High Volume: 4 samples in ~25 s • DEPArray OUT and Low Volume: 4 samples in ~7 s
Permitted consumable	DA0644 (provided in a box of 72 pcs, REF: DA0665)
Permitted holder	• Blue holder (DA0649) • Gray holder (DA0648)
Max rotational speed	3600 rpm
Maximum kinetic energy	10 J
Time to stop the instrument	• Quick stop: < 250 ms • Controlled stop: < 3 s
Sample container	200 µl PCR tube (see "Required materials and tools (not included)" on page 43 and "Compatible tubes" on page 26)
Sample input volume	From 1 to 4 tubes, max 200 µl in each tube
Sample input number of cells	• DEPArray IN: ≤ 40,000 cells • DEPArray OUT: ≤ 507 cells • Low Volume: ≤ 10,000 cells • High Volume: ≤ 100,000 cells
Sample output volume	• DEPArray IN program: ~12.5 µl • DEPArray OUT program: ~2 µl • High Volume: ~13.5 or ~12.5 µl depending on buffer type and sample container • Low Volume: ~3 or ~2 µl depending on buffer type and sample container
Sample output volume repeatability	Depends on buffer type, sample container and selected program. Typical standard deviation ~0.35 µl.
Cell retention yield	• DEPArray OUT: typically ≥ 90% • DEPArray IN: typically ≥ 85%
Permitted buffers for processing	• DABUF • RPMI • DMEM • F12K • Running Buffer (for Low Volume and High Volume only)
Max permitted density of the liquid and material for processing	1.2 g/mL
Permitted biological sample	Fixed or live cells of biological risk group II or lower
Instrument lifetime	7 years

Physical features

Dimensions	Power supply excluded: • Width: 30 cm (11.8") • Depth: 15 cm (5.9") • Height: 15 cm (5.9")
Weight	5 kg (11 lb)
Clearance	30 cm (11,8") around the instrument
A-Weighted emission sound pressure level at 30 cm from the instrument	70.2 dB (A)
Communication system	• Frequency: 13.56 MHz • Max power of the antenna for the RFID tag: +4.4 dBuA/m

Electrical data

Power connection	See "Power cord" below
Power consumption	120 W
Mains supply voltage(referred to power supply)	100-240 V AC / 50-60 Hz
Mains supply voltage fluctuation	Not to exceed ± 10% of nominal voltage
Power supply type	Mean Well GSM120B24-R7B
Power supply output	24 V dc–5 A
Input protection	5 A fuse inside the system, not replaceable
I/O ports	• n. 1 USB 2.0 female type A: for software update • n. 1 LAN: not used
Overvoltage category	II

Environmental storage conditions

***Note**: The following conditions are valid only if the product is stored intact and in its original packaging.*

Temperature	From -10 °C (14 °F) to 50 °C (122 °F)
Relative humidity	From 10% to 90% (non-condensing)
Maximum storage time	1 year

Environmental conditions of use

Ambience	Only for use indoors. Pollution Degree 1 or 2, laboratories and normal indoor environment (IEC CEI 60664-1).
Temperature	From 15 °C (59 °F) to 35 °C (95 °F)
Relative humidity	From 20% to 80% (non-condensing)
Altitude	Up to 2000 m (6562 ft)
Permitted cleaning products	Ethanol 70% and DNA AWAY
EMC environment	Basic electromagnetic environment
EMC immunity performance	• Performance level: B • Permissible performance loss: temporary display freezing or shut down

Power cord

	U.S.A. and Canada	**Europe**	**United Kingdom**	**Australia**	**China**	**Japan**
Plug	Nema 5-15P (no ground)	CEE 7/16	BS1363 (3A fuse)	AS3112	GB2099.1	JIS 8303
Overall length	1830 mm	2000 mm	2000 mm	2000 mm	1830 mm	1830 mm
Cable rating	125 V ac/7 A	250 V ac/2.5 A	250 V ac/2.5 A	250 V ac/2.5 A	250 V ac/2.5 A	125 V ac/7 A

Ordering information

Consumables

Picture	Name	Description	Provider	Quantity	Code
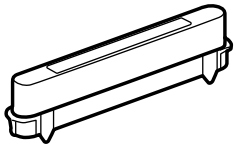	Cap	Cap to close the holder and trap the removed liquid after each run.	Menarini Silicon Biosystems	72 pcs per cap box	Cap box: DA0665 (cap: DA0644)
	DEPArray Buffer for fixed cells	Buffer to maximize the sorting performances of fixed cell samples.	Menarini Silicon Biosystems	20 vials per cap box	KI0066
	1X PBS	Phosphate Buffered Saline	Any supplier	-	-
	Running buffer	PBS CaCl2 and MgCl2 free supplemented with BSA 0.5%, Sodium azide 0,09% and EDTA 2mM	Any supplier	-	-
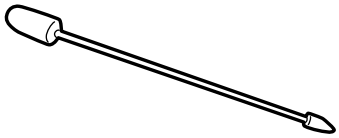	Double-head swab	Swab for cleaning the following parts: • rotor chamber • closed holder housing • holder slots • holder cavities	Menarini Silicon Biosystems	3 pcs in the cap box	-

Accessories and spare parts

Image	Name	Provider	Code
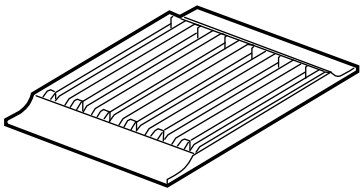	Holder rack	Menarini Silicon Biosystems	DA0658
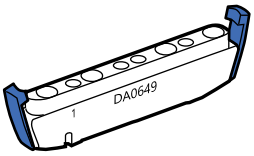	Blue holder (DA0649)	Menarini Silicon Biosystems	DA0649
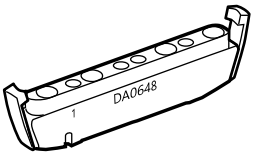	Gray holder (DA0648)	Menarini Silicon Biosystems	DA0648
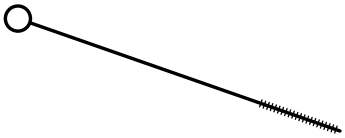	Hole brush	Menarini Silicon Biosystems	-

Required materials and tools (not included)

Image	Name	Provider	Code
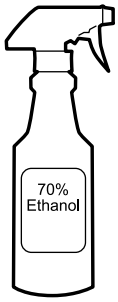	70% Ethanol solution	Any supplier	Generic
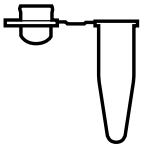	MicroAmp Reaction Tube with cap, 0.2 mL, autoclaved	Thermo Fisher Scientific	N8010612
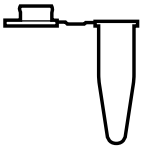	MAXYMum Recovery Thin Wall PCR Tube with flat cap, 0.2 mL	Corning Axygen	PCR-02-L-C
	Biohazard waster container	Any supplier	Generic
	Gloves	Any supplier	Generic
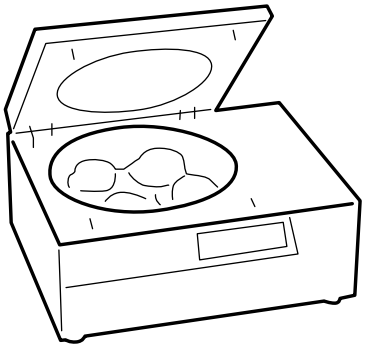	Swing bucket centrifuge, with rotor for plate centrifugation up to 1,000 g (rcf)	Any supplier	Generic

Image	Name	Provider	Code
	Thermo Scientific DNA AWAY surface decontaminant	Thermo Fisher Scientific	7010
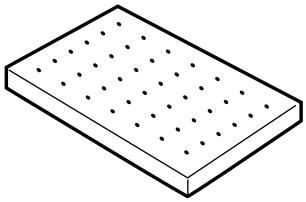	Centrifuge rack	BIOPlastic (suggested)	BP-1 B10420 (suggested)
	Tweezers	Any supplier	Generic

Disposal

Disposal liability

As specified by the European Directive 2012/19/EU, never dispose of the product as standard urban waste.

The owner is responsible for disposing both these products and any other electronic or electrical equipment via the specific waste collection centers as specified by the government or local public authorities, or by returning the products when purchasing new replacements.

Correct disposal and recycling will contribute to the prevention of potentially harmful consequences for the environment and personal health. Incorrect disposal of the product will be subject to local administrative fines.

For more detailed information on disposal, contact the relevant local public authorities, waste disposal service or the sales point where the product was purchased.

ANNEX A: CELLSEARCH SAMPLE PREPARATION FOR DEPArray

Prepare the CELLSEARCH sample for DEPArray with VR NxT

Materials required

Name	Volume	Provider	Code
Corning Thick Gel Loading Pipet Tip	1-200 µl Round 0.5 mm	Corning	4853
Protein LoBind tube	1.5 mL	Eppendorf	• EU: 0030108.116 • US: 022431081
Research plus pipette	20-200 µl	Eppendorf	P200 pipette: 3120000054
	100-1000 µl		P1000 pipette: 3120000062
epT.I.P.S LoRetention ep Dualfilter	20-300 µl	Eppendorf	• EU: 0030077.636 • US: 022493004
	50-1000 µl		• EU: 0030077.652 • US: 022493008
Swing bucket upstream centrifuge	for 1.5 mL tube	Any supplier	-
Bovine Serum Albumin, lyophilized powder (BSA)	-	Any supplier	-
1X PBS	-	Any supplier	-
DEPArray Buffer for fixed cells	-	Menarini Silicon Biosystems	KI0066

Getting started

1. Thaw a bottle of DABUF and keep it at room temperature.
   ***NOTICE**: Discard any unused DABUF once thawed. Do not refreeze it.*
2. Prepare a BSA 2% solution in 1X PBS (for example, 1 g of BSA in 50 mL of 1X PBS), considering that the minimal volume required per sample is 1.5 mL.
3. Let the solution sit and then gently agitate and invert it to mix.
   ***NOTICE**: Do not vortex.*
4. Prepare the required set of 1.5 mL tubes per sample.

Required set of 1.5 mL tubes per sample

Tube quantity	Content of the tubes	Name to write on the tube
2	325 µl of DABUF each	**DABUF**
1	1.5 mL of 2% BSA in 1X PBS	**BSA**
1	empty, to collect the sample later	**Sample**
1	empty, to collect Supernatant 1 later	**S1**
1	empty, to collect Supernatant 2 later	**S2**
1	empty, to keep the gel loading tip after BSA coating	**Tip**

Coat the pipette tip with the BSA

1. Set the P200 pipette to 200 µl.
2. Attach a clean gel loading tip to the P200 pipette.
3. Immerse the gel loading tip in the BSA tube since the internal and external surfaces of the tip are coated.
4. Slowly pipette up and down the BSA solution five times.
5. Discard any solution and bubbles present in the tip.

Open the CELLTRACKS cartridge

1. Hold the CELLTRACKS cartridge in one hand.
2. Insert the wide-end of a clean P1000 tip into the opening in the backside of the cartridge, against the top of the insert.
3. Gently push the top edge of the insert to remove the lid of the cartridge.

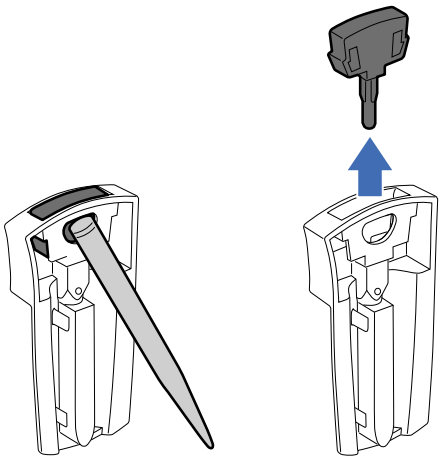

Extract the sample from the CELLTRACKS cartridge

1. Take the P200 pipette with the BSA coated tip and push the pipette knob to the first stop.
2. Insert the tip in the CELLTRACKS cartridge and slowly release the pipette knob to aspirate the sample.
3. Slowly pipette up and down five times to suspend the sample before the final aspiration.
4. Transfer 200 µl of sample into the Sample tube.
5. Repeat steps 3 and 4 to collect any sample residual and transfer it to the Sample tube.
6. Eject the tip in the Tip tube for later use.

Wash the CELLTRACKS cartridge

1. Attach a new clean gel loading tip to the P200 pipette.
2. Aspirate 200 µl of DABUF from a DABUF tube.
3. Place the tip in the upper part of the CELLTRACKS cartridge and slowly push the pipette knob to release the DABUF.
4. Repeat steps 2 and 3 for the remaining DABUF (~125 µl).
5. Discard the tip.
6. Take the BSA coated tip from the Tip tube and attach it to the P200 pipette.
7. Push the pipette knob until the first stop so that it is ready for aspiration.
8. Insert the pipette tip into the CELLTRACKS cartridge and gently pipette up and down five times to wash the inner surface of the cartridge.
9. Transfer the entire sample into the Sample tube.
   ***NOTICE**: Do not discard the tip.*
10. Repeat steps from 2 to 9 using the second DABUF tube.
    ***NOTICE**: Do not discard the CELLTRACKS cartridge.*
11. Discard the tip.
12. Centrifuge the Sample tube at 1,000 g for 5 minutes at room temperature in a swing bucket centrifuge.
13. Carefully remove the Sample tube from the centrifuge and move it under the biosafety cabinet class II.

Wash the sample for the first time

1. Take a P1000 pipette and attach a clean P1000 tip to it.
2. Push the pipette knob so that it is ready for aspiration.
3. Without disturbing the cell pellet, remove the supernatant from the Sample tube until leaving ~50 µl of liquid.
4. Transfer the supernatant in the S1 tube.
5. Discard the tip.
6. Attach a new clean P1000 tip to the P1000 pipette.

7. Take 1,000 µl of DABUF from the DABUF bottle.
8. Put the pipette tip against the wall in the upper part of the Sample tube.
9. Carefully push the knob to release the DABUF and let the liquid flow down the wall of the tube.
10. Discard the tip.
11. Centrifuge the Sample tube at 1,000 g for 5 minutes at room temperature in a swing bucket centrifuge.
12. Carefully remove the Sample tube from the centrifuge and move it under the biosafety cabinet class II.

Wash the sample for the second time

1. Attach a clean P1000 tip to the P1000 pipette.
2. Carefully remove the supernatant from the Sample tube until leaving ~150 µl of liquid.
3. Transfer the removed supernatant in the S2 tube.
4. Discard the tip.

Prepare the sample for the volume reduction

1. Take a P200 pipette and attach a clean P300 tip to it.
2. Push the pipette knob to the first stop.
3. Aspirate the entire volume from the Sample tube slowly releasing the pipette knob.
4. Lean the pipette tip against the bottom of a MicroAmp Reaction Tube with cap.
5. Without creating bubbles, push the pipette knob to release the sample in the same MicroAmp Reaction Tube with cap while moving the pipette upward slowly.
   NOTICE*: In case of bubbles, the output sample volume is not guaranteed.*
6. Discard the tip.
7. Put the tube in the centrifuge rack and centrifuge it at 1,000 g x 5 min with a swing bucket centrifuge: the sample is now ready for the volume reduction (see "Volume reduction to 13.5 or 12.5 µl" on page 28).

ANNEX B: DEPArray RECOVERIES PREPARATION FOR DOWNSTREAM GENETIC ANALYSIS

Prepare the DEPArray recoveries for downstream genetic analysis with VR NxT

Sample characteristics

***Note**: Samples prepared according to this protocol can be used for downstream analysis methods such as Ampli1 WGA Kit or similar.*

Cells are collected from the DEPArray following the rules below:

Number of cells	Number of drops*
one	one
up to 20	two
more than 20	six

Note: Number of cell collection drops from DEPArray.*

Precautions

The liquid reduction of samples coming from the DEPArray should be performed within 24 hours from the end of the recovery process.

The DEPArray rack is tilted sideways and it is not suitable for the centrifuge. Therefore samples must be moved to the centrifuge racks while preparing the sample for volume reduction.

Procedure

1. Take the recovery rack with the tubes from the DEPArray.
2. Place it on a flat surface and close the tubes.
3. Move the tubes from the DEPArray rack to the centrifuge racks.
4. Place the same number of tubes on each rack to guarantee balance.
5. Insert the centrifuge racks in the swing bucket centrifuge.
6. Centrifuge the samples as follows:

If samples come from...	And contain up to...	Then centrifuge at...
DEPArray V2	1 drop	• (live cells) 300 g x 3 min • (fixed cells) 1,000 g x 3 min
	2 drops	• (live cells) 300 g x 10 min • (fixed cells) 1,000 g x 10 min
	6 drops	
DEPArray NxT	1 drop	• (live cells) 300 g x 3 min • (fixed cells) 1,000 g x 3 min
	2 drops	
	6 drops	• (live cells) 300 g x 10 min • (fixed cells) 1,000 g x 10 min

7. Place the centrifuge racks under the laminar flow hood.

8. If the samples contain two drops, refer to the following table:

If samples come from...	And the contained cells are...	Then remove from the meniscus...
DEPArray V2	fixed	-
	live	20 µl of cell medium
DEPArray NxT	fixed	-
	live	16 µl of cell medium

9. If the samples contain six drops, refer to the following table:

If samples come from...	And the contained cells are...	Then remove from the meniscus...
DEPArray V2	fixed	70 µl of DABUF
	live	95 µl of cell culture medium
DEPArray NxT	fixed	50 µl of DABUF
	live	83 µl of cell culture medium

10. Add 100 µl of 1X PBS in each tube with a pipette and close the tubes.
11. Put the pipette tip against the wall at the top of the tube to dispense the liquid.
12. Insert the centrifuge racks in the swing bucket centrifuge.
13. Centrifuge the sample as follows:

If the sample contains...	Then centrifuge at...
live cells	300 g x 15 min
fixed cells	1,000 g x 10 min

Result: the sample is now ready for the volume reduction to ~2 µl (see "Volume reduction to 3 or 2 µl" on page 30).

LICENSE AGREEMENT

Software conditions of use

License Agreement

Menarini Silicon Biosystems ("MSB") licenses the Software installed in VR™ NxT product to you subject to the terms contained in this end user license agreement (this "Agreement" or "EULA").

You should read the terms and conditions of this agreement carefully before using VR™ NxT system.

For purposes of this Agreement, the term “Software” also includes any eventual upgrades, modified versions, updates and additions which are provided free of charge by MSB to all the end users and includes all valid copies of the Software licensed to you by MSB with this EULA.

The Software is copyrighted. This license to the Software is available to you: a) free of charge in case your VR™ NxT system is under warranty for defects or covered by a valid service contract, either directly by MSB or its authorized distributor, or b) in case your VR™ NxT system is not under warranty for defects or valid service contract, and you have purchased the Software upgrade license, either directly from MSB or its authorized distributor. In both cases the Software product is licensed to you for an unlimited period of time, for a single VR™ NxT system and for an individual concurrent user. In no event shall the Software itself be considered as sold to you under this Licence Agreement.

By using the VR™ NxT system , you agree to be bound by the terms of this EULA. This EULA is a legal agreement concerning the Software between you, as either an individual or a single business entity, and MSB.

This Agreement supersedes and replaces any prior proposal, representation, or understanding you may have had with MSB specifically relating to the VR™ NxT system Software.

Third party Software

This Software uses third-party Software components from several sources. Portions of these Software components are copyrighted and licensed by their respective owners. Various licenses require that the end-user receive a copy of the license. Such licenses may be found on the distribution media in a folder called "Licenses". In order to use this Software, the end-user must abide by the terms and conditions of these third-party licenses. By using this Software, you agree to abide and to be bound by the terms and conditions of these third-party licenses too, where applicable. After installation, such licenses may also be found at the following links:

- https://www.isc.org/downloads/software-support-policy/isc-license/
- https://www.freebsd.org/copyright/license.html
- https://www.gnu.org/licenses/lgpl.html
- http://puredata.info/about/pdlicense/
- https://www.openssl.org/source/license.html
- https://docs.python.org/3/license.html
- https://www.apache.org/licenses/LICENSE-2.0
- https://dev.perl.org/licenses/artistic.html
- https://opensource.org/licenses/mit-license.php
- https://www.zlib.net/zlib_license.html

Confidentiality

You agree that aspects of the licensed materials, including the specific design and structure of individual programs, constitute trade secrets and/or copyrighted material of MSB ("confidential information"). You agree not to transfer, copy, disclose, provide or otherwise make available such confidential information in any form to any third party without the prior written consent of MSB.

You agree to implement reasonable security measures to protect such confidential information, but without limitation to the foregoing, shall use best efforts to maintain the security of the confidential information provided to you by MSB.

Regulated Uses

The Software installed in VR™ NxT system is intended for Research Use Only (RUO). You acknowledge that the Software has not been cleared, approved, registered or otherwise qualified by MSB for use in diagnostic procedures.

Grant of License

Subject to the terms and conditions of this Agreement, MSB hereby grants to you, for a single VR™ NxT system and for an individual current user, a non-exclusive, non-transferable licence (without the right to sublicense) for an unlimited period of time to use the Software installed in VR™ NxT system.

You are responsible for managing the usage of the licensed Software to ensure that such usage does not exceed the specific number of Concurrent Authorized Users and VR™ NxT system allowed by your Licence.

You may make just one copy of the Software in machine-readable form and solely for backup or archival purposes. You must reproduce on such copy all copyright notices and any other proprietary legends found on the original. You shall not make any other copies of the Software.

Restrictions on Grant

Except as otherwise specifically permitted in this Agreement, you may not: (a) modify or create any derivative works of the Software or any related documentation provided by MSB or an Authorized Distributor, including translation or localization; (b) copy the Software except as specifically provided elsewhere by MSB; (c) separate Software, which is licensed as a single product, into its component parts; (d) sublicense;

(e) reverse engineer, decompile, or disassemble or otherwise attempt to derive the source code; (f) redistribute, encumber, sell, rent, lease, sublicense, use the Software in a timesharing or service bureau arrangement, or otherwise transfer rights on the Software under any circumstances; (g) remove or alter any trademark, logo, copyright or other proprietary notices, legends, symbols or labels in the Software or on the related data storage devices, packaging and associated documentation; or (h) use the Software on more computers or computing devices than the number licensed. Notwithstanding the foregoing you may transfer this Software to a purchaser of the specific DEPArray™ NxT System in or for which this Software is installed in connection with any sale of such instrument, provided that the transferee agrees to be bound by and to comply with the provisions of this Agreement.

Software Product Support

Under the terms of this EULA MSB is under no obligation to provide technical or application support beyond that provided through its standard customer care during the VR™ NxT system Standard Warranty For Defects period and each eventual Extended Warranty periods, and provides no assurance that any specific errors or discrepancies in the Software will be corrected. See also the sections of “Limited Warranty and limitation of remedies”.

Updates

Under the terms of this EULA MSB is under no obligation to provide Updates. To receive and use an eventual Update, you must pay the applicable fees (if required by MSB) for that Update and agree to MSB’s standard terms and conditions governing the use of that Update. If no such standard terms and conditions are stated by MSB, the terms of this Agreement shall apply, and the Update shall be deemed as integral part of the Licensed Software. MSB will issue a new License Serial Number for each eventual Updated version of Software Licenced to you.

Title

Title, ownership rights and intellectual property rights in and to the Software and the associated documentation shall at all times remain with MSB. All rights not specifically granted by this License, including international copyrights, are reserved by MSB.

Copyright

The Software, including its structure, organization, code, user interface and the associated documentation, is a proprietary output of MSB, is copyrighted and is protected by copyright laws and international treaty provisions including those on Droit d'Autor. The law provides for civil and criminal penalties for anyone in violation of the laws of copyright.

Terms Of This Agreement

You may terminate this Agreement by discontinuing use of the VR™ NxT system, removing all copies from any computers and storage media, and returning the Software and the associated documentation, and all copies thereof, to MSB. MSB may terminate this Agreement if you fail to comply with all of its terms, in which case you agree to discontinue using the VR™ NxT system, remove all copies from any computers and storage media, and return the Software and the associated documentation, and all copies thereof, to MSB.

Limited Warranty and limitation of remedies and liability

The Software and the associated documentation are licensed “AS IS”: you thus assume any and all other responsibilities for use of the Software to achieve your intended results, and for the results obtained from your use of the Software, further than those results eventually covered by MSB' warranty. MSB just warrants that the Software will function substantially in accordance with the functions and features described in the associated documentation delivered with the Software when properly installed. The above warranties do not apply to defects resulting from misuse, neglect, or accident, including without limitation: operation outside of the environmental or use specifications, or not in conformance with the instructions for any instrument system, Software, or accessories; improper or inadequate maintenance by the user; installation of Software or interfacing, or use in combination with Software or products not supplied or authorized by MSB; intrusive activity, including without limitation computer viruses, hackers or other unauthorized interactions with instrument or Software that detrimentally affects normal operations and modification or repair of the products not authorized by MSB. In case of breach of this warranty:

A) if the Software is provided by MSB to you free of charge, MSB' sole liability and responsibility shall be limited, at MSB' sole option, to (i) correction of any error identified to MSB in a writing from you in a subsequent release of the Software, which shall be supplied to you free of charge, (ii) replacement of the defective Software with the previous version at no charge to you, or (iii) providing a reasonable workaround within a reasonable time;

B) if the Software is provided by MSB to you for a License Price, instead of the three options above, you may opt for the refund of such License Price, so terminating this Agreement pursuant the “Term Of This Agreement” paragraph's provisions. These are your sole and exclusive remedies for any breach of this warranty and warranty claims must be made within the applicable warranty period.

The applicable warranty period for this Software coincides with the Standard Warranty for Defects period of the VR™ NxT system in which the Software is installed and each eventual Extended Warranty period.

That above is the sole warranty by MSB and MSB disclaims all other warranties, whether express or implied. Without limitation of the foregoing, MSB expressly does not further warrant that the Software will meet your requirements, that it will exactly conform to the associated documentation, that operation of the Software will be uninterrupted or error free or that MSB will correct all program errors.

Finally, without prejudice to what stated above, in no event shall MSB be responsible or liable, whether in contract,

tort, warranty or under any statute (including without limitation any trade practice, unfair competition or other statute of similar import) or on any other basis for special, indirect, incidental, multiple, punitive, or consequential damages arising out of the possession or use of, or the inability to use, the Software or the associated documentation, even if MSB is advised in advance of the possibility of such damages, including without limitation damages arising from or related to loss of use, loss of data, downtime, or for loss of revenue, profits, goodwill or business or other financial loss.

Entire Agreement

This Agreement constitutes the complete and exclusive agreement between you and MSB with respect to the subject matter hereof, and supersedes all prior or contemporaneous oral or written communications, proposals, representations, understandings, or agreements not specifically incorporated herein. This Agreement may not be amended except in a writing duly signed by you and an authorized representative of MSB.

Jurisdiction

Any dispute regarding the interpretation, execution and termination of this agreement unless amicably solved shall be assigned to the exclusive jurisdiction of the Courts of Bologna; Italian substantive and procedural law shall govern the Agreement.

CONFORMITY

Declarations

Declaration of conformity

Following is the list of Directives the product meets:

- 2006/42/EC (MD - Machinery)
- 2014/30/EU (EMC - Electromagnetic compatibility)
- 2014/53/EU (RED - Radio equipment)
- 2011/65/EU (RoHS - Hazardous substances in electrical and electronic equipment

Standards applied are:

- EN ISO 12100
- ISO/TR 14121-2
- EN ISO 13849-1
- EN ISO 14119
- EN ISO 14120
- EN 60204-1
- EN ISO 7010
- EN 61010-1
- EN 61010-2-020
- IEC 61326-1

FCC statement

The System complies with the FCC (Federal Communications Commission) Part 15.

Operation is subject to the following two conditions:

- This device may not cause harmful interference, and
- This device must accept any interference received, including interference that may cause undesired operation.

Changes or modification not expressly approved by the party responsible for compliance could void the user's authority to operate the equipment.

FCC ID: **2APP5-VRNXT01**

WARRANTY AND RESPONSIBILITY

Warranty

Limited warranty

The warranty period begins from the date of receipt of the instrument (if marketed directly by Menarini Silicon Biosystems); consult terms of sale for warranty period.

Menarini Silicon Biosystems warrants to the Customer that VR NxT instrument is free of all material and labour defects for the aforementioned warranty period.

If VR NxT instrument or its hardware components should prove to be defective during the warranty period, Menarini Silicon Biosystems may at its choice:

1. Repair the products using new or refurbished parts;
2. Replace VR NxT instrument or its components with new, operating products like the original product and parts.

Replaced products or components will be covered by the remaining original product warranty period or a **90 days** period from the replacement intervention report date, if the latter is longer. Systems or components returned to Menarini Silicon Biosystems, replaced by Menarini Silicon Biosystems, become the property of Menarini Silicon Biosystems.

Warranty service

Any indications of problems following intervention by a Menarini Silicon Biosystems technician or an authorized product support and service provider must be communicated to Menarini Silicon Biosystems within **five working days** from the date of the intervention closure report or the date of receipt of the repaired instrument.

Once such term is passed, no complaint related to the maintenance or repair service carried out will be accepted.

Parts not covered by warranty

The following are not covered:

- Periodical controls
- Intervention to replace expendable materials and the materials themselves
- Calibration
- Normal maintenance
- Software maintenance and upgrading

Warranty cancellation and limitations

All warranties for the VR NxT instrument and on Menarini Silicon Biosystems products are void if:

- voltage other than what is indicated by Menarini Silicon Biosystems is used
- tampering occurred
- evident non compliance with use instructions found in this manual;
- unauthorized dismantling of machine parts occurred
- attempts to repair and/or assemble parts made by personnel not authorized by Menarini Silicon Biosystems happened
- natural calamities, power network defects or vandalism cause breakdowns
- breakdowns caused by the device not being used correctly occurs

The warranty does not apply to:

- Expendables (disposable cap, chemicals in general, swab, etc);
- Parts subjected to normal wear and tear;
- Parts for which normal use exceeds limits established in specifications.

Warranty validity

Validity is only acknowledged by presentation of a copy of the device's original EC conformity certificate owned by the Customer. The authenticity of the above document will be acknowledged by Menarini Silicon Biosystems, at its final judgment.

Responsibility

Menarini Silicon Biosystems

Menarini Silicon Biosystems is relieved of all liability for any direct or indirect damage of any kind deriving from any non-compliance. This includes loss of profits, costs sustained for delays in carrying out tests and costs for recovering lost or damaged data.

The warranty does not include recovery and re-installation of system software and applications.

Menarini Silicon Biosystems must not be held responsible, not even during a valid warranty period, for damages the instrument could suffer if the Customer network the VR NxT instrument is connected to, is not adequately screened against atmospheric phenomena (e.g.: lightning) and electric phenomena generated by the network (e.g.: network overloading), or other factors not referable to Menarini Silicon Biosystems.

Finally, Menarini Silicon Biosystems is not responsible, not even in a valid warranty period, for damage caused by natural calamities (e.g.: fires, floods) or vandalism.

It is Customer's responsibility to position the machine in a place that is suitably protected against the aforementioned problems and connect it to an adequate electricity network to avoid anything that could harm the device and its parts.

Customer

The Customer must inform Menarini Silicon Biosystems of any problems detected as quickly as possible from the moment they occur, describing operations on the device that took place just before and after the breakdown. It must also make any information requested available to technicians during the breakdown analysis process.

The device must be available for Menarini Silicon Biosystems maintenance technicians for the time needed to recover it.

Menarini Silicon Biosystems SpA
Via Giuseppe Di Vittorio 21b/3
40013 Castel Maggiore (BO)
Italia

www.siliconbiosystems.com

Instruction Manual
VRNXTinstr1EN
1.0 EN 02-2019
© 2019