# Airthings Wave Plus

Smart Radon Detector with Indoor Air Quality Sensors

Operating manual

Version 1, May 8, 2018

---

Set up your Airthings device in 3 simple steps:

1. Download the Airthings Wave App, available on iOS and Android
2. Create an account and insert Name, Email and Location*
3. Follow the simple instructions in the app to connect your device

*We encrypt and securely store your information in the Airthings Cloud. Providing your location is optional, however, sharing your radon information helps us understand how regional radon works and can ultimately save lives.

**Many easy ways to contact Airthings**

Online

Look at our frequently asked questions, or contact us directly through our support form.

support.airthings.com

By email

Send an email directly to support at support@airthings.com

By phone

Customer service in English:
US +1 (866) 254-2221
CA +1 (866) 222-2117
Norway +47 21 40 37 62
Global +44 808 169 5752

Open Mon-Fri 7:00-1:00am
Central European Time

Social media

Message us on facebook, Twitter, LinkedIn or Instagram!

Airthings
Airthingsglobal
Airthings
Airthings

Have any questions or comments that we didn't get to here? Let us know! support.airthings.com

Congratulations on taking this important step toward living a healthier life.

By keeping track of your Indoor Air Quality and radon levels, you can make healthier decisions in the spaces where you spend most of your time. Increased productivity and energy levels, better quality sleep, and resistance to illness are just a few of the benefits. Lessening your exposure to radon will reduce your risk of lung cancer.

The Airthings Wave Plus provides you with detailed information about Radon, VOCs, $CO_2$, Temperature, Humidity and Air Pressure levels on your phone, Airthings Dashboard or simply wave in front of the device for a visual indication of your radon levels.

Breathe better, live better,
The Airthings team

# Features and content

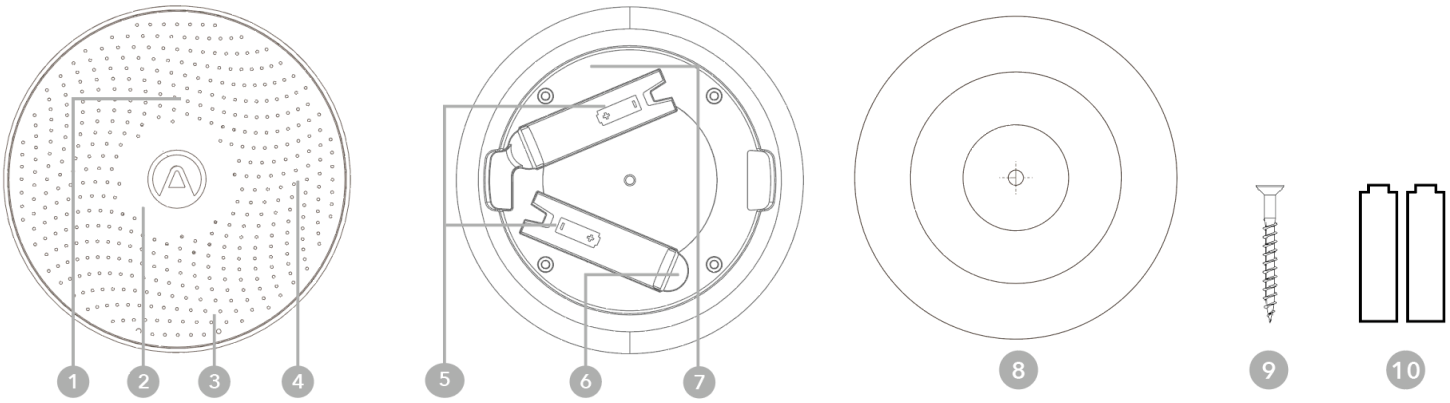


1. Power indicator
2. Light ring
3. Motion sensor
4. Air inlets
5. Battery compartments (observe polarity symbols)
6. One-time battery tab
7. Individual serial number
8. Mounting bracket
9. Screw
10. 2 AA batteries, inserted

## Power Indicator

Flashing dot every 20 seconds

Green: battery level okay
Blue: Bluetooth connectivity active
Red: Replace batteries

## Light Ring

Visual indication of your air quality levels.

Green: Good
Yellow: Warning
Red: Danger

(Go to airthings.com/mylevels for more information on your air quality action levels)

## Air Inlets

This is where air comes into your detector.

## Audio Alarm

The device can give you audio alerts if your air quality levels are violating the recommended amount. In case of audio alerts, simply wave in front of the device to snooze alerts.

## Wave Sensor

Simply wave in front of your detector to activate the light ring.

## Basics of the App

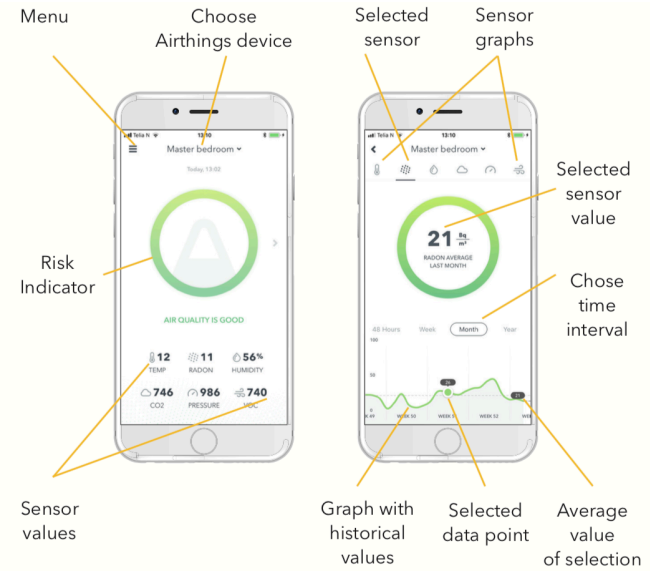


*All sensor measurements are adjustable to your country's unit system.

# Easy to mount

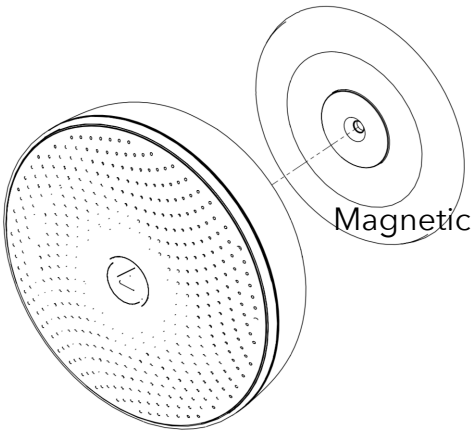


Fix the mounting bracket to the ceiling or wall. Make sure you use appropriate screws for your wall type. The screws included are intended for wood or drywall. Do not place it close to vents or windows. Minimum 1 meter / 3 feet distance.

Thanks to the built-in magnet, simply snap the unit onto the mounted bracket. Then rotate it to the desired position.

# Initial setup

You'll receive your first radon reading in about an hour but we recommend leaving your Wave Plus uninterrupted for at least 1 week for an accurate radon reading. Radon levels fluctuate daily which is why continuous monitoring is necessary. The VOC and $CO_2$ sensors require 72 hours for the initial internal calibration.

# Daily use

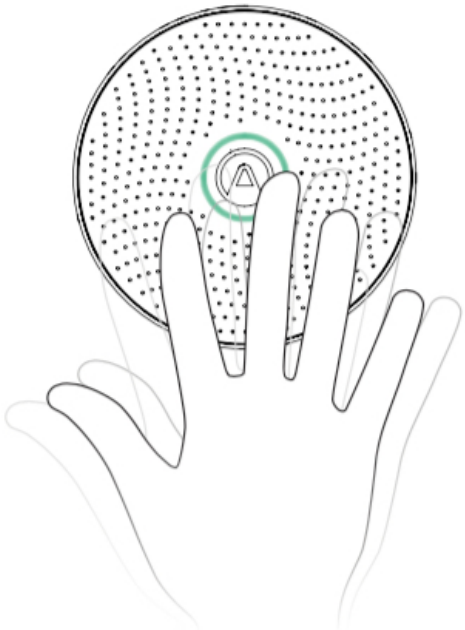

Wave in front of your device to see a visual indication of your overall Indoor Air Quality.

Make sure you always have Bluetooth enabled on your phone and the app running in the background. Every time you are in range of your device, the latest data will be synced automatically. You will be notified if any actions are needed through the app.

The Wave Plus also includes Airthings Smartlink which works with the Hub. Refer to the Hub manual for the Smartlink info. The Hub provides longer range as well as live updates using the Airthings Smartlink.

# Integrations

The Airthings Wave Plus shares data to your mobile device as well as the Airthings Dashboard—a free online platform that provides quick access to view, customize and analyze sensor data from multiple Airthings devices.

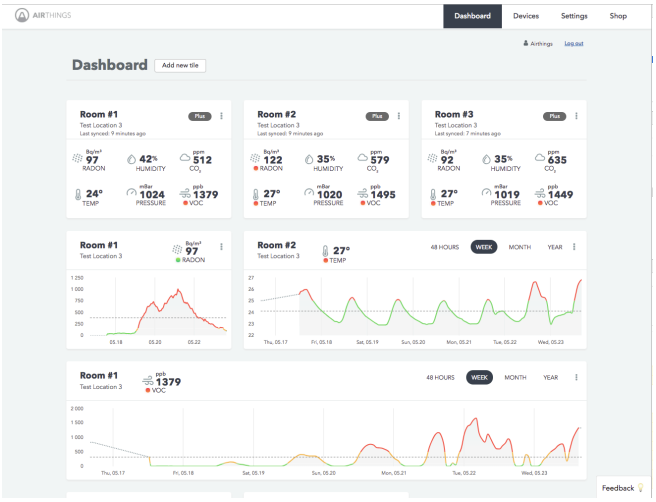


The Airthings Wave Plus is integrated with Amazon Alexa and IFTTT. With Amazon Alexa, use voice commands to control your device. IFTTT integration allows users to create or access useful recipes for their device to follow and integrate with third-party products. Sign up for our newsletter for the latest updates.

Works with IFTTT

amazon alexa

# Glow ring

| | | |
|---|---|---|
| **Spinning: Connecting**<br>**Flashing: Connection successful** | Blue | The light ring will spin blue when the device is waiting for the first connection from the App. This will continue for about 1 minute. Knock gently on the device to check the status. If the connection was successful, the blue light will flash twice. |
| **Waiting for first result** | White | No air quality assessment is available yet. |
| **Good**<br>**Air quality is good**<br>**Spinning: updating internal software** | Green | Indoor Air Quality is good and your radon level is below the recommended level according to EPA and WHO, which is 100 Bq/m³ or 2.7 pCi/L. |
| **Warning**<br>**Above recommended level, keep measuring** | Yellow | Indoor Air Quality levels are above the recommended level and radon levels are between 100-150 Bq/m³ or 2.7-4 pCi/L. Take simple steps to bring more fresh air inside and continue monitoring. |
| **Danger**<br>**Above recommended level and action should be taken to lower your levels** | Red | Measurements are above the recommended level. Actions should be taken to lower radon levels and increase ventilation. |

# Sensor icons

Indoor air contaminants vary depending on inhabitants and ventilation, as well as the contents and use of the space. Continuous monitoring is essential to understand trends and optimize ventilation to avoid negative effects on your overall health.

Radon – Decrease exposure to this radioactive gas that accumulates in buildings and homes. It is the number one cause of lung cancer among non-smokers but can be managed with continuous monitoring.

Volatile Organic Compounds – VOCs are vapors emitted from all sorts of daily products including paints and furniture, wax and cosmetics, cleaning and hobby products, cooking and human breath. At high concentrations they can be harmful and cause negative side-effects from minor eye, nose and throat irritations all the way to liver and kidney damage and even cancer, depending on the level of exposure.

Carbon Dioxide – $CO_2$ is an invisible gas which rises to unhealthy levels indoors. It can cause headaches, restlessness and drowsiness as well as affect decision-making skills. High levels are directly correlated to low productivity, absenteeism and infectious disease transmission.

Humidity – Too much or too little humidity can affect allergies and cold or flu symptoms. When humidity levels are too high, mold and rot will occur. Low humidity levels cause static electricity, dry skin and hair, and increased susceptibility to colds and respiratory illness.

Temperature – Indoor temperatures can affect performance, mood and comfort level. Individual sleep patterns are also affected by indoor air temperature.

Pressure – Barometric pressure is the pressure given by the atmosphere at any given point.  It is known as the “weight of the air” and changes depending on your elevation, as well as weather patterns. It can cause headaches.

# Color coding and action levels

| Sensor | Unit | | Color |
|---|---|---|---|
| | US | ROW | |
| Radon*<br><br>*If radon levels remain red for over 1 month, contact your local health authority | pCi/L | Bq/m3 | **Bq/m3:**<br>🟢 <100<br>🟡 ≥100 <150<br>🔴 ≥150<br>**pCi/L:**<br>🟢 <2.7 pCi/L<br>🟡 ≥2.7<4<br>🔴 ≥4 |
| Temperature | °F | °C | **Celsius:**<br>🔵 <18<br>🟢 ≥18 and ≤25<br>🔴 >25<br>**Fahrenheit:**<br>🔵 <64<br>🟢 ≥64 and ≤77<br>🔴 >77 |
| Humidity | % | % | 🔴 <25<br>🟡 ≥25<30<br>🟢 ≥30<60<br>🟡 ≥60<70<br>🔴 ≥70 |
| VOC | ppb | ppb | 🟢 <100<br>🟡 ≥100 and <500<br>🔴 ≥500 |
| $CO_2$ | ppm | ppm | 🟢 <800<br>🟡 ≥800<1000<br>🔴 ≥1000 |
| Pressure | mBar | mBar | 🔵 <990<br>🟢 ≥ 990 |

# Troubleshooting

First and foremost, always make sure that you have updated to the latest device software

- In the device settings menu, click update device.

Not able to connect to my device

- Make sure you have the detector within the range of 2-5 meters or 5-15 feet.
- Check if Bluetooth is turned on.
- Check if the power indicator is blinking.

Need to turn off the audio alert

- In the iOS app, go to device settings menu and update radon alarm settings.
- Wave in front of the detector to snooze for 1 month.

My app is not updated when running in background mode

- Open your phone settings and verify that the Airthings Wave app is running in the background. You can usually find this in the app manager section of your phone settings.
- Make sure you are in Bluetooth range periodically.

No response from light ring

- Check if the power indicator is blinking.
- If the power indicator is blinking red, or not blinking at all, the battery level is low. First, sync your data and then replace the batteries. We recommend AA alkaline (LR6).

If you need further assistance, read our Frequently Asked Questions, or simply contact support at support.airthings.com.

# Technical specifications

Power supply: 2 AA 1.5V alkaline (LR6)
3.0V nominal (2x1.5V)
3.8V maximum, 1.8V minimum (depleted batteries)
500mA max current draw

Dimensions: Diameter: 120 mm (4.72in)
Height: 36 mm (1.42in)

Weight: 225g including 2 batteries (7.9 oz)

Operational and storage environment:
Temperature: 4 °C (39 °F) to +40 °C (104 °F)
Relative humidity: < 85%

Measurement range: 0 Bq/m$^3$ to 50,000 Bq/m$^3$
(0 pCi/L to 1350 pCi/L)

Initial accuracy/precision for Radon at 100 Bq/m$^3$ (2.7 pCi.L):
7 days < 10%
2 months < 5%

Within the first week, the accuracy levels of the Airthings Wave Plus are within 10% at one standard deviation, measured at 100 Bq/m$^3$ (2.7 pCi.L). After a month, the accuracy increases drastically to within 5% at one standard deviation, measured at 100 Bq/m$^3$ (2.7 pCi.L). As the device gathers data, the accuracy of readings increases drastically.

All Airthings detectors have been tested directly against the AlphaGUARD reference device—the professional radon monitoring benchmark with which all radon detectors and tests are referenced.

## Safety and maintenance

The Airthings Wave Plus is intended for indoor use only. Avoid direct exposure to sunlight for long periods. Avoid exposure to direct heat sources. For correct usage, make sure the detector is operating in the specified temperature range (see technical specifications).

Exposure to high humidity might permanently alter the detector sensitivity or damage it.

Do not disassemble. If the detector does not work as specified or you are in doubt, contact your local dealer or visit us at Airthings.com.

Use a dry cloth to clean the detector.

When replacing the batteries, pay attention to the polarity marks. Use AA alkaline (LR6) batteries.

Always snap the mounting bracket to the detector's rear side to protect the batteries, even when the detector is not permanently mounted.

Disposal: electronic equipment.

## Limited liability

The instrument is tested and quality-assured by production. It meets the accuracy values set out in the specifications. It is recommended to keep the instrument constantly activated and the batteries in place until drained.

Airthings AS shall not be liable for damages related to failure or loss of data arising from incorrect operations and handling of the instrument.

## Terms & conditions

airthings.com/terms-use-privacy/

For other languages or additional questions go to support.airthings.com

The Bluetooth word mark and logos are registered trademarks owned by the Bluetooth SIG, Inc. and any use of such marks by Airthings is under license.

Copyright Airthings AS, 2018

# Regulatory information

## Regulatory information Canada

Changes or modifications not expressly approved by the party responsible for compliance could void the user's authority to operate the equipment.

*Les changements ou modifications non expressément approuvés par la partie responsable de la conformité pourraient annuler l'autorisation de l'utilisateur d'utiliser l'équipement.*

This device complies with Innovation, Science and Economic Development Canada's licence- exempt RSS(s). Operation is subject to the following two conditions: (1) This device may not cause interference; and (2) This device must accept any interference, including interference that may cause undesired operation of the device.

*Le présent appareil est conforme aux CNR de l'ISDE applicables aux appareils radio exempts de licence. L'exploitation est autorisée aux deux conditions suivantes : (1) l'appareil ne doit pas produire de brouillage, et (2) l'utilisateur de l'appareil doit accepter tout brouillage radioélectrique subi, même si le brouillage est susceptible d'en compromettre le fonctionnement.*

### RF exposure safety

This product is a radio transmitter and receiver.

It is designed not to exceed the emission limits for exposure to radio frequency (RF) energy set by the ISED.

The antenna must be installed and operated with minimum distance of 20 cm between the radiator and your body.

This transmitter must not be co-located or operating in conjunction with any other antenna or transmitter.

*Ce produit est un émetteur et un récepteur radio.*

*Il est conçu pour ne pas dépasser les limites d'émission pour l'exposition à l'énergie radiofréquence (RF) établie par l'ISDE.*

*L'antenne doit être installé de façon à garder une distance minimale de 20 cm entre la source de rayonnements et votre corps.*

*L'émetteur ne doit pas être colocalisé ni fonctionner conjointement avec à autre antenneou autre émetteur.*

### CAN ICES-3 (B)/NMB-3(B)

This Class B digital apparatus complies with Canadian ICES-003
Cet appareil numérique de clase B est conforme à la norme Canadienne ICES-003

## Regulatory information USA

Changes or modifications not expressly approved by the party responsible for compliance could void the user's authority to operate the equipment.

This device complies with part 15 of the FCC Rules. Operation is subject to the following two conditions: (1) This device may not cause harmful interference, and (2) this device must accept any interference received, including interference that may cause undesired operation.

## Class B device notice

NOTE: This equipment has been tested and found to comply with the limits for a Class B digital device, pursuant to part 15 of the FCC Rules. These limits are designed to provide reasonable protection against harmful interference in a residential installation. This equipment generates, uses and can radiate radio frequency energy and, if not installed and used in accordance with the instructions, may cause harmful interference to radio communications. However, there is no guarantee that interference will not occur in a particular installation. If this equipment does cause harmful interference to radio or television reception, which can be determined by turning the equipment off and on, the user is encouraged to try to correct the interference by one or more of the following measures:

–Reorient or relocate the receiving antenna.
–Increase the separation between the equipment and receiver.
–Connect the equipment into an outlet on a circuit different from that to which the receiver is connected.
–Consult the dealer or an experienced radio/TV technician for help.

## RF exposure safety

This product is a radio transmitter and receiver.

It is designed not to exceed the emission limits for exposure to radio frequency (RF) energy set by the Federal Communications Commission.

The antenna must be installed and operated with minimum distance of 20 cm between the radiator and your body.

This transmitter must not be co-located or operating in conjunction with any other antenna or transmitter.