# View Radon
# Print + QR code label

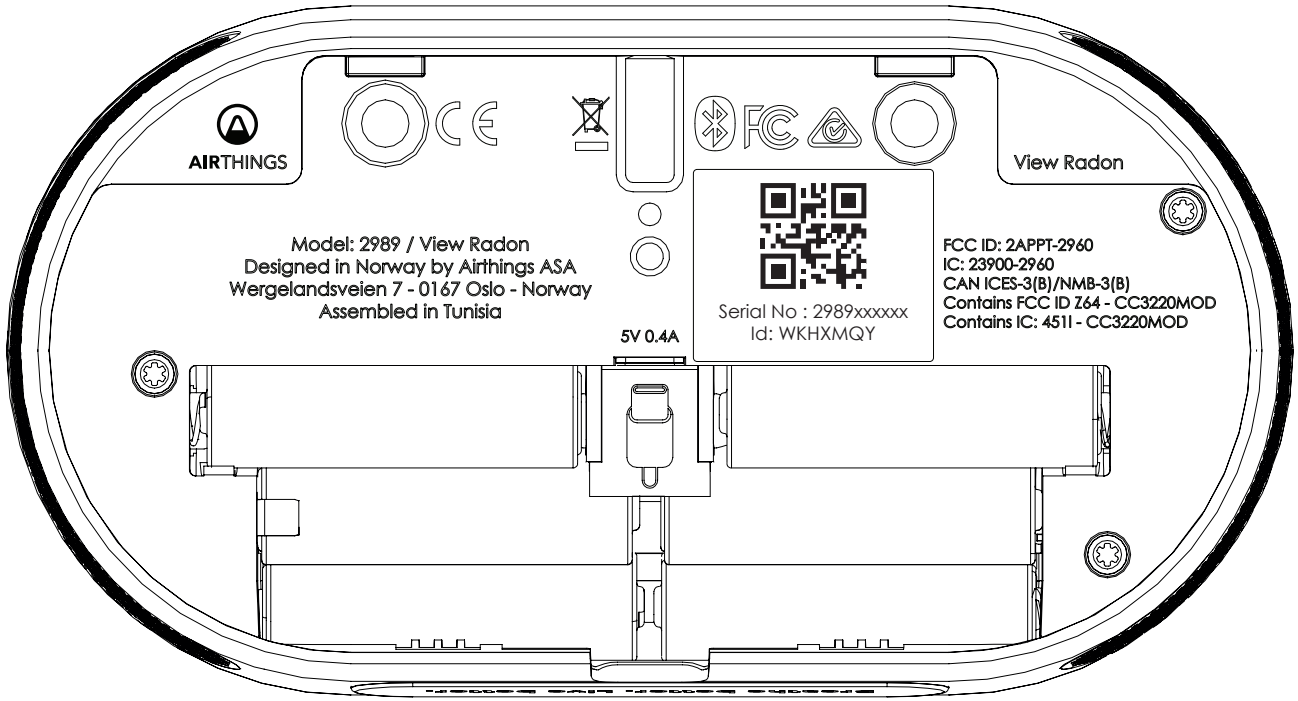


| | |
|---|---|
| Revision # | 002 |
| Revision Date | 11.06.2021 |
| Designed by (4MOD) | S.ALLARD |
| Approved by (Airthings) | |

These drawings and specifications are the property of 4MOD Technology and shall not be reproduced or copied, or used as basis for the manufacture or sale of apparatus or devices without permission.
4MOD Technology, SARL au capital de 50 000€ RCS 501 537 500 00057
4, rue de la cornouaille 44300 NANTES

# View Radon
# Laser print

For size(s) and font(s), please refer to the DXF

Material to engrave: polycarbonate (PC)

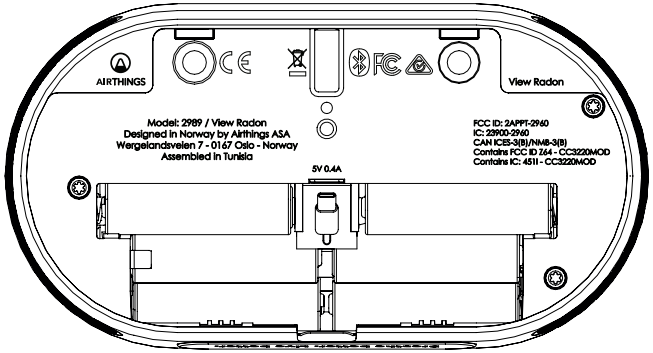


Scale 1:2

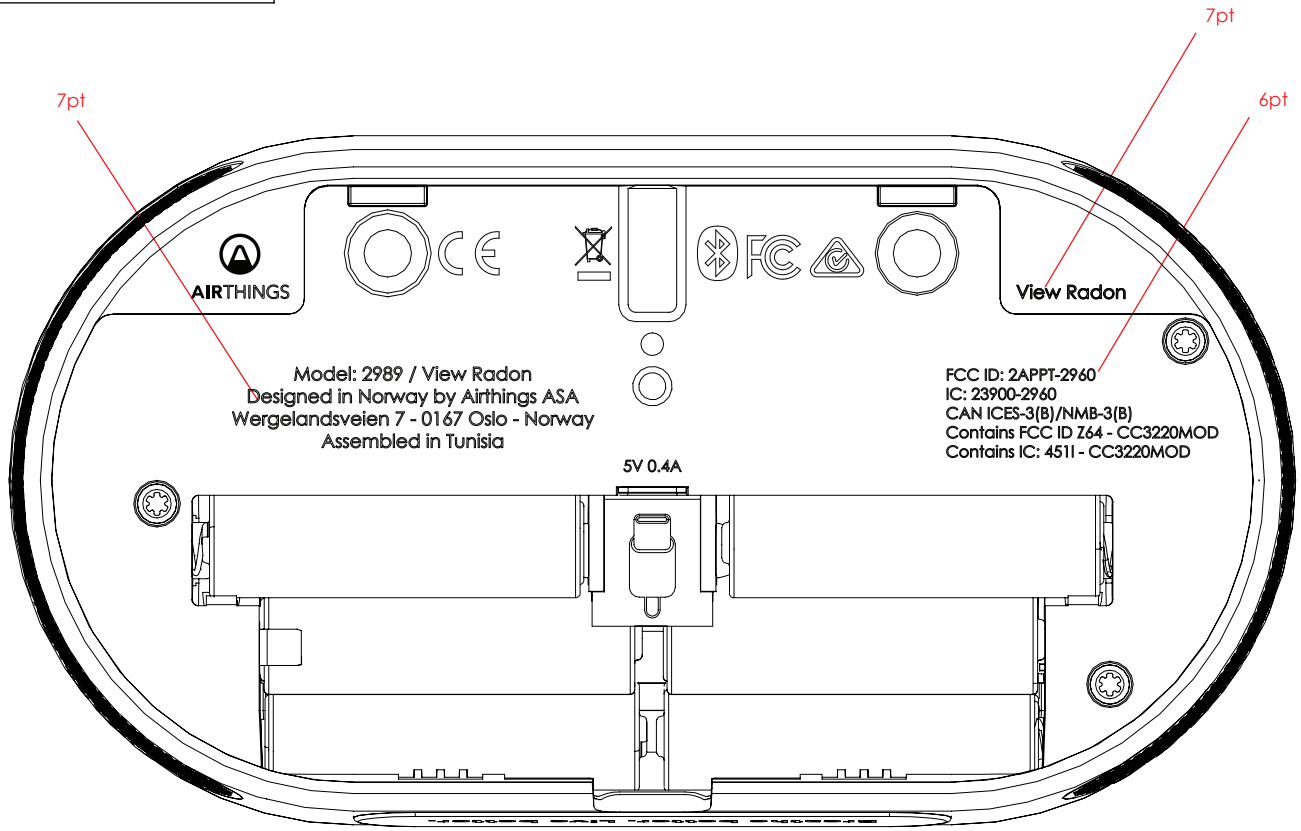


Scale 1:1

These drawings and specifications are the property of 4MOD Technology and shall not be reproduced or copied, or used as basis for the manufacture or sale of apparatus or devices without permission.
4MOD Technology, SARL au capital de 50 000€ RCS 501 537 500 00057
4, rue de la cornouaille 44300 NANTES

# View Radon
# QR code label

Serial No : 2989xxxxxx
Id: WKHXMQY

**QR code label**
**(1x1.25 inch or 25,4x31,75mm)**

**QR code size: 14x14mm (mandatory)**

**White sticker**
**Serial n° from 2989xxxxxx**

1 Choose a Printer

ZT411

2 Select Media

3 Select Printer Technology

Thermal Transfer (ribbon required)

4 Select Media Type

Synthetic

5 Select Media Size (in.)

1.25

1.0

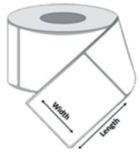


Scale 1:1
Size A4

These drawings and specifications are the property of 4MOD Technology and shall not be reproduced or copied, or used as basis for the manufacture or sale of apparatus or devices without permission.
4MOD Technology, SARL au capital de 50 000€ RCS 501 537 500 00057
4, rue de la cornouaille 44300 NANTES