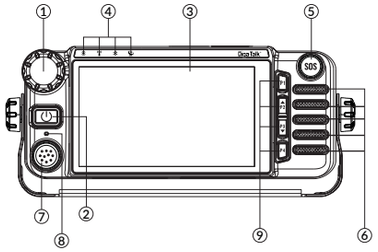

No.	Part Name	No.	Part Name
1	Volume/Channel Knob (Double click to switch the functions)		
2	Power On/Off	3	LCD Display
4	LED Indicators	5	SOS Key
6	Speaker	7	Microphone Jack
8	Microphone	9	Programmable Keys

Notice: Channel Knob functions must be adjusted for PTT applications.

Main Mic & Noise Reduction

There are two mics for the 8051. The main mic is under power button. The sub-mic (a noise reducing mic) is on the top of the 8051, which is between the label and SIM Card/Type-C interface.

Main Mic: Without the external RM connected, the user can use P1 for PTT button and make Push-to-Talk through the main mic.

Noise Reduction Mic: The chip helps to reduce environmental noise during VoIP calling, and bring a clearer calling experience to customers.

LED Lights

There are five LED lights on the 8051: Power status, Internet & PTT, Wi-Fi, BT and GPS.

Power status light:

a. The light will be off if the device is powered off.

b. There will be steady green light on the power button if the device is powered on.

Internet & PTT light:

a. The light will be flashing green if the device is connected to internet during standby mode.

b. The light will be flashing red if the network is abnormal.

c. The light will be steady red if there is no PTT connection.

d. The light will be yellow and green if the PTT is connected.

BT light:

a. The light will be off if the BT is off.

b. The light will be flashing orange if the BT is on, but there is no other device connected.

c. The light will be steady yellow-green if the BT is on and there is a device connected.

GPS light:

a. The light will be off if the GPS is off.

b. The light will be flashing orange if the GPS is on, but it is still searching the satellites.

c. The light will be steady yellow-green if the GPS is on and the device is connected with the satellites. If the light is steady yellow-green it means the location of the device has been successfully locked, and the high-precision positioning function can be used.

Programmable Keys

You can install different PTT applications and set the P1, P2, P3, P4 buttons as different functions, customize the PTT application provider according to your needs.

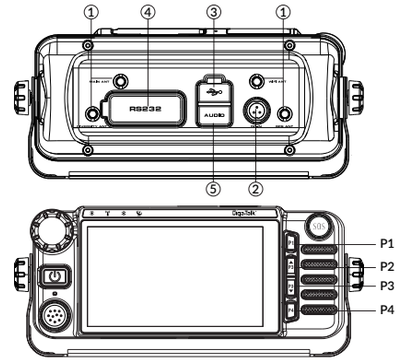

No.	Nome
1	Antenna Port
2	Power Port
3	USB Port
4	RS232 Port
5	3.5mm Audio Port

Program-mable key	Part Name
P1	PTT
P2	Channel up
P3	Channel down
P4	Map

CE Warning

1. The operating temperature of the device can't exceed 60℃ and shouldn't be lower than -20℃.
2. The device complies with RF specifications when the device is used at 20cm from your body.

Hereby, Diga-Talk+ declares that this product is in compliance with essential requirements and other relevant provisions of Directive 2014/53/EU. This product is allowed to be used in all EU member states.

FCC Warning

15.19 Labeling requirements.
This device complies with part 15 of the FCC Rules. Operation is subject to the following two conditions: (1) This device may not cause harmful interference, and (2) this device must accept any interference received, including interference that may cause undesired operation.
15.21 Information to user.
Any Changes or modifications not expressly approved by the party responsible for compliance could void the user's authority to operate the equipment.
15.105 Information to the user.
Note: This equipment has been tested and found to comply with the limits for a Class B digital device, pursuant to part 15 of the FCC Rules. These limits are designed to provide reasonable protection against harmful interference in a residential installation. This equipment generates uses and can radiate radio frequency energy and, if not installed and used in accordance with the instructions, may cause harmful interference to radio communications. However, there is no guarantee that interference will not occur in a particular installation. If this equipment does cause harmful interference to radio or television reception, which can be determined by turning the equipment off and on, the user is encouraged to try to correct the interference by one or more of the following measures:
-Reorient or relocate the receiving antenna.
-Increase the separation between the equipment and receiver.
-Connect the equipment into an outlet on a circuit different from that to which the receiver is connected.
-Consult the dealer or an experienced radio/TV technician for help.
The device complies with RF specifications when the device used at 20cm from your body.

Diga-Talk+

815-530-2378
sales@digatalkplus.com
710 W. Jefferson St., Joliet, IL 60435
www.digatalkplus.com

Note

- Warranty period is 1 year from date of purchase.
- This product is consistently upgrading. We reserves the right to change the specifications of the software and/or hardware mentioned in this operating guide without prior notice. The product specifications and information mentioned in the operating guide are for reference only.

Check List

Notice:

Please check the above accessories before you discard the packing material. Please contact your local dealer immediately if there is any missing or damage parts.

The antenna is recommended to be fixed on the plane in the upper right/left corner of the center console with the Logo facing upwards.
Warning: The Antenna must not be placed in the area affected by SRS airbag.

Installation Steps

Before you install the radio in a vehicle, be sure to read the following instructions carefully.

- The radio operates with cathode-grounded power supply of 12 to 24V DC only.
- Please check polarity and voltage of the power supply on the vehicle before you install the radio.
- Make sure the screws extend beyond the bottom surface of the radio before you install it. Drill the mounting hole cautiously to avoid damage to the vehicle wiring and other parts.
- Please connect DTP supplied antenna and power cord to the radio before you install it in the bracket. Make sure the antenna and power cord are dedicated for DTP Systems digital radios.
- Install the radio with the DTP supplied mounting bracket, to keep it secure in case of accidents. A loose radio may cause body injury.
- Install the radio in a location where it's easy to reach the front panel controls.
- Please make sure there's sufficient space at the back of the radio for wiring.
- When the fuse for DC power cord needs replacement, it must be replaced by a fuse with the same specification.

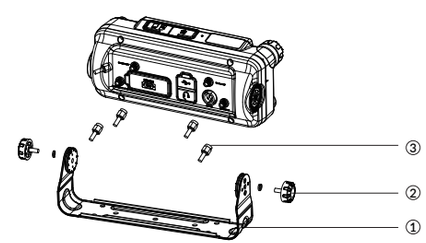

A. Install the bracket in a location where it's easy to operate the device.

B. Connect accessories such as antenna and power cable to the device.

C. Slide the device into the mounting bracket and secure it using the locking knobs.

D. Install the microphone hanger in a location where it can be reached easily.

E. Plug the palm microphone into the microphone jack on the front panel and place it on the hanger when not in use.

No.	Part Name
1	Mounting Bracket
2	Locking Knobs
3	Antenna Cap

Care and Cleaning

- To guarantee optimal performance as well as a long service life of the product, please follow the tips below.

Before Use

- Turn on the switch connects communicator with the car battery/circuit.
- Insert the SIM into 8051 vehicular communicator and SIM data, or connect to a Wi-Fi/hotspot.

Product Care

- Keep the product in a well ventilated space with appropriate heat dissipation to facilitate normal working parameters.
- Do not place objects on top of the product to ensure optimal heat dissipation.
- Do not place the product in corrosive agents, solutions or water.

Product Cleaning

- Clean the dust and fine particles from the product parts with a clean and dry lint-free cloth or a brush regularly.
- Use a non-woven fabric with neutral cleanser to clean the keys, control knobs, LCD and jacks after extended use.
- Don't use chemical preparations such as stain removers, alcohol, sprays or oil preparations.
- Make sure the product is completely dry before use.

Caution: Power off the product before cleaning.

Diga-Talk+
Nationwide Push-To-Talk

8051
Quick Start Guide

Thanks for choosing our product!
The Quick Start Guide applies to the DTP-8051 series.
Please read the Quick Start Guide before using the product.