中认信通
CHINA CERTIFICATION ICT CO., LTD (DONGGUAN)

ACCREDITED
TESTING LABORATORY
CERTIFICATE # 6356.01

SAR TEST REPORT

Applicant: **A Beep, LLC**

Address: 710 W JEFFERSON ST, Joliet, IL, 60435, United States

FCC ID: **2APPUSR400**

Product Name: **POC RADIO**

Model Number: **SR-400**

Standard(s): **47 CFR Part 2(2.1093)**

The above equipment has been tested and found compliant with the requirement of the relative standards by China Certification ICT Co., Ltd (Dongguan)

Report Number: **CR22050038-SA**

Date Of Issue: **2022-07-30**

Reviewed By: **Sun Zhong**

Sun Zhong

Title: Manager

Test Laboratory: **China Certification ICT Co., Ltd (Dongguan)**
No. 113, Pingkang Road, Dalang Town, Dongguan,
Guangdong, China
Tel: +86-769-82016888

SAR TEST RESULTS SUMMARY

Operation Frequency Bands	Highest Reported 1g SAR (W/kg)		Limits (W/kg)
	Face Up (Gap 10mm)	Body Back (Gap 0mm)	
WCDMA Band 2	0.38	0.33	**1.6**
WCDMA Band 4	0.65	0.31	
WCDMA Band 5	**0.79**	**0.56**	
LTE Band 2	0.62	0.26	
LTE Band 5	0.78	0.49	
LTE Band 12	0.17	0.08	
LTE Band 13	0.52	0.24	
LTE Band 14	0.57	0.37	
LTE Band 66&4	0.64	0.29	
LTE Band 71	0.13	0.07	
Maximum Simultaneous Transmission SAR			
Items	**Face Up (Gap 10mm)**	**Body Back (Gap 0mm)**	**Limits**
Sum SAR(W/kg)	N/A	N/A	**1.6**
SPLSR	N/A	N/A	0.04
EUT Received Date:	2022/05/23		
Tested Date:	2022/06/03 ~ 2022/06/04		
Tested Result:	Pass		

Test Facility

The Test site used by China Certification ICT Co., Ltd (Dongguan) to collect test data is located on the No. 113, Pingkang Road, Dalang Town, Dongguan, Guangdong, China.

The lab has been recognized as the FCC accredited lab under the KDB 974614 D01 and is listed in the FCC Public Access Link (PAL) database, FCC Registration No. : 442868, the FCC Designation No. : CN1314.

The lab has been recognized by Innovation, Science and Economic Development Canada to test to Canadian radio equipment requirements, the CAB identifier: CN0123.

Declarations

China Certification ICT Co., Ltd (Dongguan) is not responsible for the authenticity of any test data provided by the applicant. Data included from the applicant that may affect test results are marked with a triangle symbol "▲". Customer model name, addresses, names, trademarks etc. are not considered data.

Unless otherwise stated the results shown in this test report refer only to the sample(s) tested.

This report cannot be reproduced except in full, without prior written approval of the Company.

This report is valid only with a valid digital signature. The digital signature may be available only under the Adobe software above version 7.0.

This report may contain data that are not covered by the accreditation scope and shall be marked with an asterisk "★".

CONTENTS

SAR TEST RESULTS SUMMARY 2
TEST FACILITY 3
DECLARATIONS 3
1. GENERAL INFORMATION 6
1.1 PRODUCT DESCRIPTION FOR EQUIPMENT UNDER TEST (EUT) 6
1.2 TEST SPECIFICATION, METHODS AND PROCEDURES 7
1.3 SAR LIMTS 8
2. SAR MEASUREMENT SYSTEM 9
3. EQUIPMENT LIST AND CALIBRATION 16
3.1 EQUIPMENTS LIST & CALIBRATION INFORMATION 16
4. SAR MEASUREMENT SYSTEM VERIFICATION 17
4.1 LIQUID VERIFICATION 17
4.2 SYSTEM ACCURACY VERIFICATION 19
4.3 SAR SYSTEM VALIDATION DATA 20
5. EUT TEST STRATEGY AND METHODOLOGY 23
5.1 TEST POSITIONS FOR DEVICE OPERATING NEXT TO A PERSON'S EAR 23
5.2 CHEEK/TOUCH POSITION 24
5.3 EAR/TILT POSITION 24
5.4 TEST POSITIONS FOR BODY-WORN AND OTHER CONFIGURATIONS 25
5.5 TEST DISTANCE FOR SAR EVALUATION 26
5.6 SAR EVALUATION PROCEDURE 27
6. CONDUCTED OUTPUT POWER MEASUREMENT 28
6.1 TEST PROCEDURE 28
6.2 DESCRIPTION OF TEST CONFIGURATION 29
6.3 MAXIMUM TARGET OUTPUT POWER 32
6.4 TEST RESULTS: 33
7. STANDALONE SAR TEST EXCLUSION CONSIDERATIONS 49
8. SAR MEASUREMENT RESULTS 50
8.1 SAR TEST DATA 50
9. MEASUREMENT VARIABILITY 55
10. SAR PLOTS 56

APPENDIX A MEASUREMENT UNCERTAINTY 57
APPENDIX B EUT TEST POSITION PHOTOS 59
APPENDIX C CALIBRATION CERTIFICATES 60

1. GENERAL INFORMATION

1.1 Product Description for Equipment under Test (EUT)

Device Type:	Portable
Exposure Category:	Population / Uncontrolled
Antenna Type(s):	Integral Antenna
Body-Worn Accessories:	Belt Clip
Face-Head Accessories:	None
Operation modes:	WCDMA(R99 (Voice+Data), HSDPA/HSUPA), FDD-LTE
Frequency Band:	WCDMA Band 2: 1850-1910 MHz(TX); 1930-1990 MHz(RX) WCDMA Band 4: 1710-1755 MHz(TX) ; 2110-2155 MHz(RX) WCDMA Band 5: 824-849 MHz(TX); 869-894 MHz(RX) LTE Band 2: 1850-1910 MHz(TX); 1930-1990 MHz(RX) LTE Band 4: 1710-1755 MHz(TX); 2110-2155 MHz(RX) LTE Band 5: 824-849 MHz(TX); 869-894 MHz(RX) LTE Band 12: 699-716 MHz(TX); 729-746 MHz(RX) LTE Band 13: 777-787 MHz(TX); 746-756 MHz(RX) LTE Band 14: 788-798 MHz(TX); 758-768 MHz(RX) LTE Band 66: 1710-1780 MHz(TX); 2110-2200 MHz(RX) LTE Band 71: 663-698 MHz(TX); 617-652 MHz(RX)
Conducted RF Power:	WCDMA Band 2: 22.39 dBm; WCDMA Band 4: 22.31 dBm; WCDMA Band 5: 22.79 dBm; LTE Band 2: 22.68 dBm; LTE Band 4: 22.71 dBm; LTE Band 5: 23.44 dBm; LTE Band 12: 23.66 dBm; LTE Band 13: 23.7 dBm; LTE Band 14: 23.64 dBm; LTE Band 66: 22.9 dBm; LTE Band 71: 23.7 dBm.
Rated Input Voltage:	DC 3.7V from Rechargeable Battery
Serial Number:	CR22050038-SA-S1 CR22050038-SA-S2 CR22050038-SA-S3
Normal Operation:	Face Up and Body Worn

1.2 Test Specification, Methods and Procedures

The tests documented in this report were performed in accordance with FCC 47 CFR §2.1093, IEEE 1528-2013, the following FCC Published RF exposure KDB procedures:

KDB 447498 D04 Interim General RF Exposure Guidance v01
KDB 648474 D04 Handset SAR v01r03
KDB 865664 D01 SAR Measurement 100 MHz to 6 GHz v01r04
KDB 865664 D02 RF Exposure Reporting v01r02
KDB 941225 D01 3G SAR Procedures v03r01
KDB 941225 D05 SAR for LTE Devices v02r05

TCB Workshop April 2019: RF Exposure Procedures

1.3 SAR Limts

FCC Limit

EXPOSURE LIMITS	SAR (W/kg)	
	(General Population / Uncontrolled Exposure Environment)	(Occupational / Controlled Exposure Environment)
Spatial Average (averaged over the whole body)	0.08	0.4
Spatial Peak (averaged over any 1 g of tissue)	**1.60**	8.0
Spatial Peak (hands/wrists/feet/ankles averaged over 10 g)	4.0	20.0

Population/Uncontrolled Environments are defined as locations where there is the exposure of individual who have no knowledge or control of their exposure.

Occupational/Controlled Environments are defined as locations where there is exposure that may be incurred by people who are aware of the potential for exposure (i.e. as a result of employment or occupation).

General Population/Uncontrolled environments Spatial Peak limit 1.6W/kg for 1g SAR applied to the EUT.

2. SAR MEASUREMENT SYSTEM

These measurements were performed with the automated near-field scanning system DASY5 from Schmid & Partner Engineering AG (SPEAG) which is the Fifth generation of the system shown in the figure hereinafter:

DASY5 System Description

The DASY5 system for performing compliance tests consists of the following items:

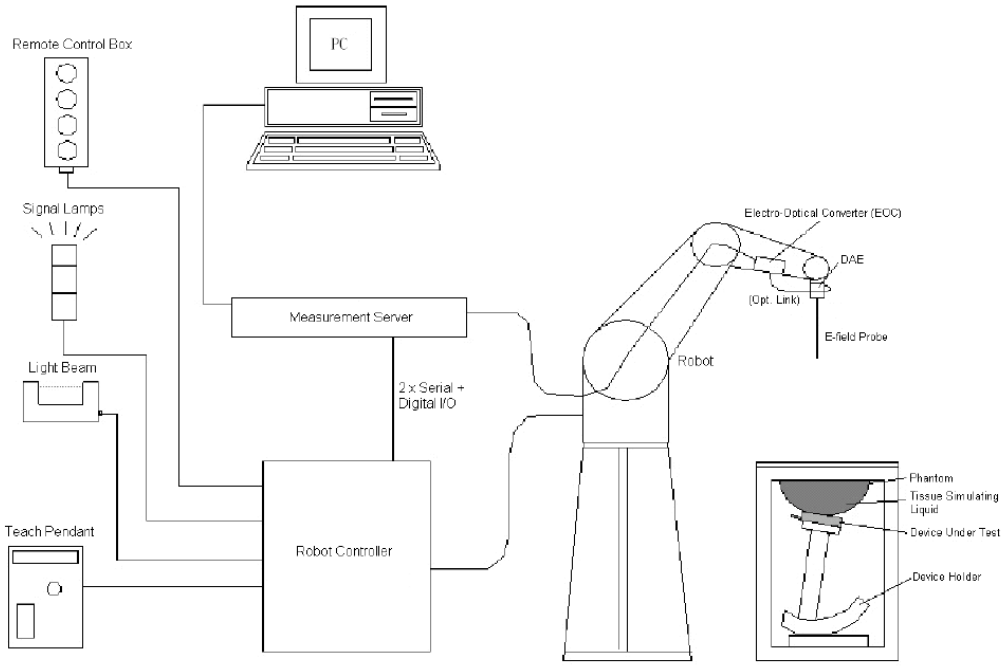

- A standard high precision 6-axis robot with controller, teach pendant and software. An arm extension for accommodating the data acquisition electronics (DAE).
- An isotropic field probe optimized and calibrated for the targeted measurement.
- A data acquisition electronics (DAE) which performs the signal application, signal multiplexing, AD-conversion, offset measurements, mechanical surface detection, collision detection, etc. The unit is battery powered with standard or rechargeable batteries. The signal is optically transmitted to the EOC.
- The Electro-optical converter (EOC) performs the conversion from optical to electrical signals for the digital communication to the DAE. To use optical surface detection, a special version of the EOC is required. The EOC signal is transmitted to the measurement server.
- The function of the measurement server is to perform the time critical tasks such as signal filtering, control of the robot operation and fast movement interrupts.
- The Light Beam used is for probe alignment. This improves the (absolute) accuracy of the probe positioning.
- A computer running Win7 professional operating system and the DASY52 software.
- Remote control and teach pendant as well as additional circuitry for robot safety such as warning lamps, etc.
- The phantom, the device holder and other accessories according to the targeted measurement.

DASY5 Measurement Server

The DASY5 measurement server is based on a PC/104 CPU board with a 400MHz Intel ULV Celeron, 128MB chip-disk and 128MB RAM. The necessary circuits for communication with the DAE4 (or DAE3) electronics box, as well as the 16 bit AD-converter system for optical detection and digital I/O interface are contained on the DASY5 I/O board, which is directly connected to the PC/104 bus of the CPU board.

The measurement server performs all real-time data evaluation of field measurements and surface detection, controls robot movements and handles safety operation. The PC operating system cannot interfere with these time critical processes. All connections are supervised by a watchdog, and disconnection of any of the cables to the measurement server will automatically disarm the robot and disable all program-controlled robot movements. Furthermore, the measurement server is equipped with an expansion port which is reserved for future applications. Please note that this expansion port does not have a standardized point out, and therefore only devices provided by SPEAG can be connected. Devices from any other supplier could seriously damage the measurement server.

Data Acquisition Electronics

The data acquisition electronics (DAE4) consist of a highly sensitive electrometer-grade preamplifier with auto-zeroing, a channel and gain-switching multiplexer, a fast 16 bit AD-converter and a command decoder with a control logic unit. Transmission to the measurement server is accomplished through an optical downlink for data and status information, as well as an optical uplink for commands and the clock.

The mechanical probe mounting device includes two different sensor systems for frontal and sideways probe contacts. They are used for mechanical surface detection and probe collision detection.

The input impedance of both the DAE4 as well as of the DAE3 box is 200MOhm; the inputs are symmetrical and floating. Common mode rejection is above 80 dB.

EX3DV4 E-Field Probes

Frequency	10 MHz to > 6 GHz Linearity: ±0.2 dB (30 MHz to 6 GHz)
Directivity	±0.3 dB in TSL (rotation around probe axis) ±0.5 dB in TSL (rotation normal to probe axis)
Dynamic Range	10 µW/g to > 100 mW/g Linearity: ±0.2 dB (noise: typically < 1 µW/g)
Dimensions	Overall length: 337 mm (Tip: 20 mm) Tip diameter: 2.5 mm (Body: 12 mm) Typical distance from probe tip to dipole centers: 1 mm
Application	High precision dosimetric measurements in any exposure scenario (e.g., very strong gradient fields); the only probe that enables compliance testing for frequencies up to 6 GHz with precision of better 30%.
Compatibility	DASY3, DASY4, DASY52 SAR and higher, EASY4/MRI

Calibration Frequency Points for EX3DV4 E-Field Probes SN: 7522 Calibrated: 2022/5/6

Calibration Frequency Point(MHz)	Frequency Range(MHz)		Conversion Factor		
	From	To	X	Y	Z
750 Head	650	850	9.70	9.70	9.70
900 Head	850	1000	9.24	9.24	9.24
1750 Head	1650	1850	8.10	8.10	8.10
1900 Head	1850	2000	7.79	7.79	7.79
2300 Head	2200	2400	7.50	7.50	7.50
2450 Head	2400	2550	7.22	7.22	7.22
2600 Head	2550	2700	7.02	7.02	7.02

SAM Twin Phantom

The SAM twin phantom is a fiberglass shell phantom with 2mm shell thickness (except the ear region, where shell thickness increases to 6 mm). The phantom has three measurement areas:
_ Left Head
_ Right Head
_ Flat phantom

The phantom table for the DASY systems based on the robots have the size of 100 x 50 x 85 cm (L x W x H).
For easy dislocation these tables have fork lift cut outs at the bottom.
The bottom plate contains three pairs of bolts for locking the device holder. The device holder positions are adjusted to the standard measurement positions in the three sections. Only one device holder is necessary if two phantoms are used (e.g., for different liquids)

A white cover is provided to cover the phantom during off-periods to prevent water evaporation and changes in the liquid parameters. Free space scans of devices on top of this phantom cover are possible. Three reference marks are provided on the phantom counter. These reference marks are used to teach the absolute phantom position relative to the robot.

Robots

The DASY5 system uses the high precision industrial robot. The robot offers the same features important for our application:

- High precision (repeatability 0.02mm)
- High reliability (industrial design)
- Low maintenance costs (virtually maintenance free due to direct drive gears; no belt drives)
- Jerk-free straight movements (brushless synchrony motors; no stepper motors)
- Low ELF interference (motor control fields shielded via the closed metallic construction shields)

The above mentioned robots are controlled by the Staubli CS8c robot controllers. All information regarding the use and maintenance of the robot arm and the robot controller is contained on the CDs delivered along with the robot. Paper manuals are available upon request direct from Staubli.

SAR Scan Pricedures

Step 1: Power Reference Measurement

The Power Reference Measurement and Power Drift Measurements are for monitoring the power drift of the device under test in the batch process. The minimum distance of probe sensors to surface determines the closest measurement point to phantom surface. The minimum distance of probe sensors to surface is 1.4 mm. This distance cannot be smaller than the distance of sensor calibration points to probe tip as defined in the probe properties.

Step 2: Area Scans

Area scans are defined prior to the measurement process being executed with a user defined variable spacing between each measurement point (integral) allowing low uncertainty measurements to be conducted. Scans defined for FCC applications utilize a 15mm 2 step integral, with 1.5mm interpolation used to locate the peak SAR area used for zoom scan assessments.

Where the system identifies multiple SAR peaks (which are within 25% of peak value) the system will provide the user with the option of assessing each peak location individually for zoom scan averaging.

Area Scan Parameters extracted from KDB 865664 D01 SAR Measurement 100 MHz to 6 GHz

	≤ 3 GHz	> 3 GHz
Maximum distance from closest measurement point (geometric center of probe sensors) to phantom surface	5 mm ± 1 mm	½·δ·ln(2) mm ± 0.5 mm
Maximum probe angle from probe axis to phantom surface normal at the measurement location	30° ± 1°	20° ± 1°
Maximum area scan spatial resolution: Δx_{Area}, Δy_{Area}	≤ 2 GHz: ≤ 15 mm 2 – 3 GHz: ≤ 12 mm	3 – 4 GHz: ≤ 12 mm 4 – 6 GHz: ≤ 10 mm
	When the x or y dimension of the test device, in the measurement plane orientation, is smaller than the above, the measurement resolution must be ≤ the corresponding x or y dimension of the test device with at least one measurement point on the test device.	

Step 3: Zoom Scan (Cube Scan Averaging)

The averaging zoom scan volume utilized in the DASY5 software is in the shape of a cube and the side dimension of a 1 g or 10 g mass is dependent on the density of the liquid representing the simulated tissue. A density of 1000 kg/m^3 is used to represent the head and body tissue density and not the phantom liquid density, in order to be consistent with the definition of the liquid dielectric properties, i.e. the side length of the 1g cube is 10mm,with the side length of the 10g cube is 21.5mm.

Zoom Scan Parameters extracted from KDB 865664 D01 SAR Measurement 100 MHz to 6 GHz

			≤ 3 GHz	> 3 GHz
Maximum zoom scan spatial resolution: Δx_{Zoom}, Δy_{Zoom}			≤ 2 GHz: ≤ 8 mm 2 – 3 GHz: ≤ 5 mm*	3 – 4 GHz: ≤ 5 mm* 4 – 6 GHz: ≤ 4 mm*
Maximum zoom scan spatial resolution, normal to phantom surface	uniform grid: $\Delta z_{Zoom}(n)$		≤ 5 mm	3 – 4 GHz: ≤ 4 mm 4 – 5 GHz: ≤ 3 mm 5 – 6 GHz: ≤ 2 mm
	graded grid	$\Delta z_{Zoom}(1)$: between 1st two points closest to phantom surface	≤ 4 mm	3 – 4 GHz: ≤ 3 mm 4 – 5 GHz: ≤ 2.5 mm 5 – 6 GHz: ≤ 2 mm
		$\Delta z_{Zoom}(n>1)$: between subsequent points	$\leq 1.5 \cdot \Delta z_{Zoom}(n-1)$ mm	
Minimum zoom scan volume	x, y, z		≥ 30 mm	3 – 4 GHz: ≥ 28 mm 4 – 5 GHz: ≥ 25 mm 5 – 6 GHz: ≥ 22 mm

Note: δ is the penetration depth of a plane-wave at normal incidence to the tissue medium; see IEEE Std 1528-2013 for details.

* When zoom scan is required and the *reported* SAR from the *area scan based 1-g SAR estimation* procedures of KDB Publication 447498 is ≤ 1.4 W/kg, ≤ 8 mm, ≤ 7 mm and ≤ 5 mm zoom scan resolution may be applied, respectively, for 2 GHz to 3 GHz, 3 GHz to 4 GHz and 4 GHz to 6 GHz.

Step 4: Power Drift Measurement

The Power Drift Measurement measures the field at the same location as the most recent power reference measurement within the same procedure, and with the same settings. The Power Drift Measurement gives the field difference in dB from the reading conducted within the last Power Reference Measurement. This allows a user to monitor the power drift of the device under test within a batch process. The measurement procedure is the same as Step 1.

When the cube intersects with the surface of the phantom, it is oriented so that 3 vertices touch the surface of the shell or the center of a face is tangent to the surface. The face of the cube closest to the surface is modified in order to conform to the tangent surface.

The zoom scan integer steps can be user defined so as to reduce uncertainty, but normal practice for typical test applications (including FCC) utilize a physical step of 7 x7 x 7 (5mmx5mmx5mm) providing a volume of 30 mm in the X & Y & Z axis.

Tissue Dielectric Parameters for Head and Body Phantoms

The head tissue dielectric parameters recommended by the IEC 62209-1:2016

Recommended Tissue Dielectric Parameters for Head liquid

Table A.3 – Dielectric properties of the head tissue-equivalent liquid

Frequency MHz	Relative permittivity ε_r	Conductivity (σ) S/m
300	45,3	0,87
450	43,5	0,87
750	*41,9*	*0,89*
835	41,5	0,90
900	41,5	0,97
1 450	40,5	1,20
1 500	*40,4*	*1,23*
1 640	*40,2*	*1,31*
1 750	*40,1*	*1,37*
1 800	40,0	1,40
1 900	40,0	1,40
2 000	40,0	1,40
2 100	*39,8*	*1,49*
2 300	*39,5*	*1,67*
2 450	39,2	1,80
2 600	*39,0*	*1,96*
3 000	38,5	2,40
3 500	*37,9*	*2,91*
4 000	*37,4*	*3,43*
4 500	*36,8*	*3,94*
5 000	*36,2*	*4,45*
5 200	*36,0*	*4,66*
5 400	*35,8*	*4,86*
5 600	*35,5*	*5,07*
5 800	*35,3*	*5,27*
6 000	*35,1*	*5,48*

NOTE For convenience, permittivity and conductivity values at those frequencies which are not part of the original data provided by Drossos et al. [33] or the extension to 5 800 MHz are provided (i.e. the values shown *in italics*). These values were linearly interpolated between the values in this table that are immediately above and below these values, except the values at 6 000 MHz that were linearly extrapolated from the values at 3 000 MHz and 5 800 MHz.

3. EQUIPMENT LIST AND CALIBRATION

3.1 Equipments List & Calibration Information

Equipment	Model	S/N	Calibration Date	Calibration Due Date
DASY5 Test Software	DASY52.10	N/A	NCR	NCR
DASY5 Measurement Server	DASY5 4.5.12	1567	NCR	NCR
Data Acquisition Electronics	DAE4	1354	2021/9/1	2022/8/31
E-Field Probe	EX3DV4	7522	2022/5/6	2023/5/5
Mounting Device	MD4HHTV5	BJPCTC0152	NCR	NCR
Twin SAM	Twin SAM V5.0	1412	NCR	NCR
Dipole, 750 MHz	D750V3	1167	2019/11/20	2022/11/19
Dipole, 1750 MHz	D1750V2	1141	2021/6/29	2024/6/28
Dipole, 1900 MHz	D1900V2	543	2019/10/15	2022/10/14
Simulated Tissue 750 MHz	TS-750	2110075001	Each Time	/
Simulated Tissue 1750 MHz	TS-1750	2109175001	Each Time	/
Simulated Tissue 1900 MHz	TS-1900	2109190001	Each Time	/
Network Analyzer	8753B	2828A00170	2021/10/26	2022/10/25
Dielectric assessment kit	1253	SM DAK 040 CA	NCR	NCR
Signal Generator	E8247C	MY43321352	2022/04/01	2023/03/31
Power Meter	EPM-441A/8484A	GB37481494	2021/7/22	2022/7/21
Power Amplifier	ZVA-183-S+	5969001149	NCR	NCR
Directional Coupler	441493	520Z	NCR	NCR
Attenuator	20dB, 100W	LN749	NCR	NCR
Attenuator	6dB, 150W	2754	NCR	NCR
Universal Radio Communication Tester	CMU200	110 825	2021/7/22	2022/7/21
Wideband Radio Communication Tester	CMW500	149218	2021/7/22	2022/7/21

4. SAR MEASUREMENT SYSTEM VERIFICATION

4.1 Liquid Verification

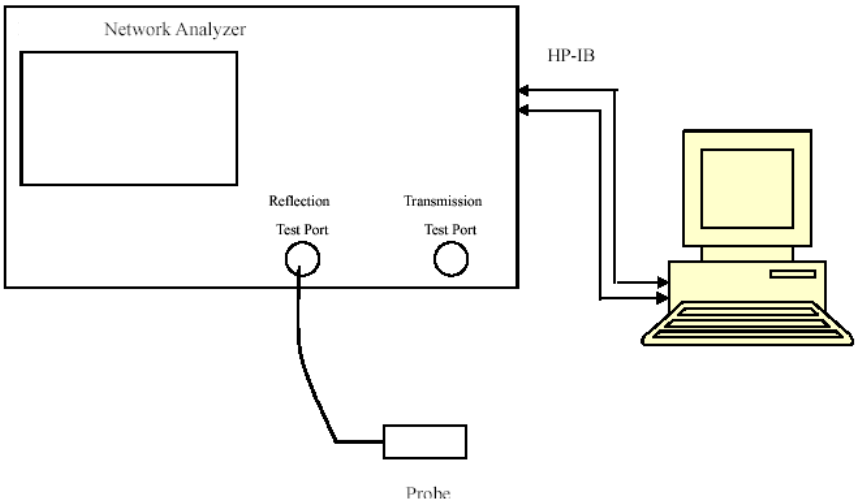

Liquid Verification Setup Block Diagram

Liquid Verification Results

Frequency (MHz)	Liquid Type	Liquid Parameter		Target Value		Delta (%)		Tolerance (%)
		ε_r	σ (S/m)	ε_r	σ (S/m)	$\Delta\varepsilon_r$	Δσ (S/m)	
673	Simulated Tissue 750 MHz	42.762	0.845	42.31	0.88	1.07	-3.98	±10
680.5	Simulated Tissue 750 MHz	42.705	0.851	42.27	0.89	1.03	-4.38	±10
688	Simulated Tissue 750 MHz	42.673	0.863	42.23	0.89	1.05	-3.03	±10
704	Simulated Tissue 750 MHz	42.531	0.871	42.15	0.89	0.9	-2.13	±10
707.5	Simulated Tissue 750 MHz	42.505	0.886	42.13	0.89	0.89	-0.45	±10
711	Simulated Tissue 750 MHz	42.465	0.893	42.11	0.89	0.84	0.34	±10
750	Simulated Tissue 750 MHz	42.388	0.901	41.9	0.89	1.16	1.24	±10
782	Simulated Tissue 750 MHz	42.219	0.913	41.75	0.89	1.12	2.58	±10
793	Simulated Tissue 750 MHz	42.198	0.919	41.7	0.9	1.19	2.11	±10
826.4	Simulated Tissue 750 MHz	41.852	0.923	41.54	0.9	0.75	2.56	±10
829	Simulated Tissue 750 MHz	41.814	0.935	41.53	0.9	0.68	3.89	±10
836.5	Simulated Tissue 750 MHz	41.768	0.94	41.5	0.9	0.65	4.44	±10
836.6	Simulated Tissue 750 MHz	41.762	0.941	41.5	0.9	0.63	4.56	±10
844	Simulated Tissue 750 MHz	41.691	0.945	41.5	0.91	0.46	3.85	±10
846.6	Simulated Tissue 750 MHz	41.623	0.952	41.5	0.91	0.3	4.62	±10

**Liquid Verification above was performed on 2022/06/03.*

Frequency (MHz)	Liquid Type	Liquid Parameter		Target Value		Delta (%)		Tolerance (%)
		ε_r	σ (S/m)	ε_r	σ (S/m)	$\Delta\varepsilon_r$	Δσ (S/m)	
1712.4	Simulated Tissue 1750 MHz	41.569	1.325	40.13	1.35	3.59	-1.85	±10
1720	Simulated Tissue 1750 MHz	41.413	1.359	40.13	1.35	3.2	0.67	±10
1732.6	Simulated Tissue 1750 MHz	41.326	1.369	40.12	1.36	3.01	0.66	±10
1745	Simulated Tissue 1750 MHz	41.202	1.382	40.1	1.37	2.75	0.88	±10
1750	Simulated Tissue 1750 MHz	41.109	1.398	40.1	1.37	2.52	2.04	±10
1752.6	Simulated Tissue 1750 MHz	41.023	1.405	40.09	1.37	2.33	2.55	±10
1770	Simulated Tissue 1750 MHz	39.869	1.423	40.06	1.38	-0.48	3.12	±10

**Liquid Verification above was performed on 2022/06/04.*

Frequency (MHz)	Liquid Type	Liquid Parameter		Target Value		Delta (%)		Tolerance (%)
		ε_r	σ (S/m)	ε_r	σ (S/m)	$\Delta\varepsilon_r$	Δσ (S/m)	
1852.4	Simulated Tissue 1900 MHz	40.236	1.365	40	1.4	0.59	-2.5	±10
1860	Simulated Tissue 1900 MHz	40.023	1.398	40	1.4	0.06	-0.14	±10
1880	Simulated Tissue 1900 MHz	39.825	1.405	40	1.4	-0.44	0.36	±10
1900	Simulated Tissue 1900 MHz	39.654	1.423	40	1.4	-0.86	1.64	±10
1907.6	Simulated Tissue 1900 MHz	39.601	1.448	40	1.4	-1	3.43	±10

**Liquid Verification above was performed on 2022/06/04.*

4.2 System Accuracy Verification

Prior to the assessment, the system validation kit was used to test whether the system was operating within its specifications of ±10%. The validation results are tabulated below. And also the corresponding SAR plot is attached as well in the SAR plots files.

The spacing distances in the **System Verification Setup Block Diagram** is given by the following:

a) s = 15 mm ± 0,2 mm for 300 MHz ≤ f ≤ 1 000 MHz;
b) s = 10 mm ± 0,2 mm for 1 000 MHz < f ≤ 3 000 MHz;
c) s = 10 mm ± 0,2 mm for 3 000 MHz < f ≤ 6 000 MHz.

System Verification Setup Block Diagram

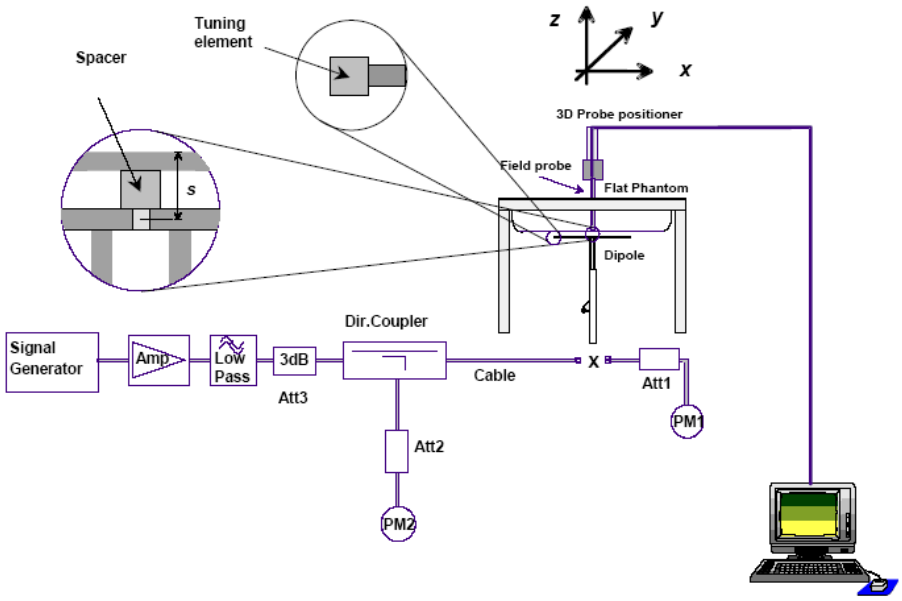

System Accuracy Check Results

Date	Frequency Band	Liquid Type	Input Power (mW)	Measured SAR (W/kg)		Normalized to 1W (W/kg)	Target Value (W/kg)	Delta (%)	Tolerance (%)
2022/6/3	750 MHz	Simulated Tissue 750 MHz	100	1g	0.852	8.52	8.38	1.67	±10
2022/6/4	1750 MHz	Simulated Tissue 1750 MHz	100	1g	3.55	35.5	36.1	-1.66	±10
2022/6/4	1900 MHz	Simulated Tissue 1900 MHz	100	1g	3.91	39.1	40.2	-2.74	±10

*The SAR values above are normalized to 1 Watt forward power.

4.3 SAR SYSTEM VALIDATION DATA

System Performance 750 MHz

DUT: D750V3; Type: 750 MHz; Serial: 1167

Communication System: CW; Frequency: 750 MHz;Duty Cycle: 1:1
Medium parameters used: f = 750 MHz; σ = 0.901 S/m; ε_r = 42.388; ρ = 1000 kg/m^3
Phantom section: Flat Section

DASY5 Configuration:

- Probe: EX3DV4 - SN7522; ConvF(9.7, 9.7, 9.7) @ 750 MHz; Calibrated: 2022/5/6
- Sensor-Surface: 1.4mm (Mechanical Surface Detection)
- Electronics: DAE4 Sn1354; Calibrated: 2021/9/1
- Phantom: Twin SAM; Type: Twin SAM V5.0; Serial: TP:1412
- Measurement SW: DASY52, Version 52.10 (2); SEMCAD X Version 14.6.12 (7470)

Area Scan (41x101x1): Interpolated grid: dx=1.500 mm, dy=1.500 mm
Maximum value of SAR (interpolated) = 1.14 W/kg

Zoom Scan (5x5x7)/Cube 0: Measurement grid: dx=8mm, dy=8mm, dz=5mm
Reference Value = 31.65 V/m; Power Drift = -0.02 dB
Peak SAR (extrapolated) = 1.46 W/kg
SAR(1 g) = 0.852 W/kg; SAR(10 g) = 0.565 W/kg
Maximum value of SAR (measured) = 1.11 W/kg

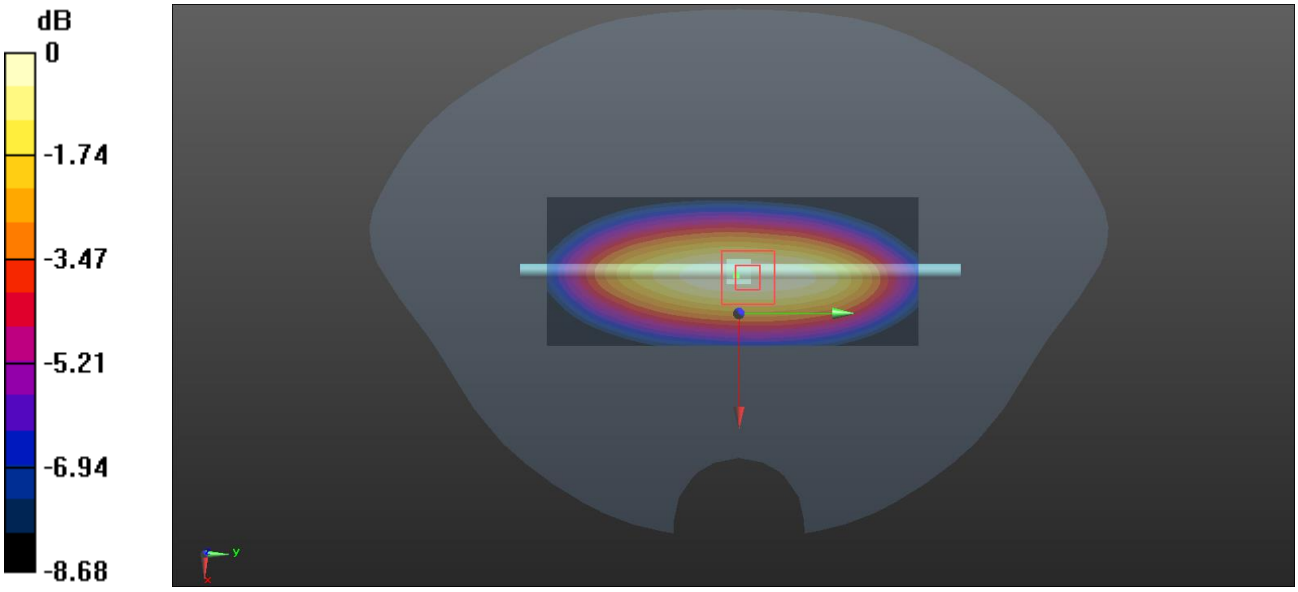

0 dB = 1.11 W/kg = 0.45 dBW/kg

System Performance 1750 MHz

DUT: D1750V2; Type: 1750 MHz; Serial: 1141

Communication System: CW; Frequency: 1750 MHz; Duty Cycle: 1:1
Medium parameters used: f = 1750 MHz; σ = 1.398 S/m; ε_r = 41.109; ρ = 1000 kg/m^3
Phantom section: Flat Section

DASY5 Configuration:

- Probe: EX3DV4 - SN7522; ConvF(8.1, 8.1, 8.1) @1750 MHz; Calibrated: 2022/5/6
- Sensor-Surface: 1.4mm (Mechanical Surface Detection)
- Electronics: DAE4 Sn1354; Calibrated: 2021/9/1
- Phantom: Twin SAM; Type: Twin SAM V5.0; Serial: TP:1412
- Measurement SW: DASY52, Version 52.10 (2); SEMCAD X Version 14.6.12 (7470)

Area Scan (41x61x1): Interpolated grid: dx=1.500 mm, dy=1.500 mm
Maximum value of SAR (interpolated) = 6.79 W/kg

Zoom Scan (5x5x7)/Cube 0: Measurement grid: dx=8mm, dy=8mm, dz=5mm
Reference Value = 53.07 V/m; Power Drift = 0.14 dB
Peak SAR (extrapolated) = 7.85 W/kg
SAR(1 g) = 3.55 W/kg; SAR(10 g) = 1.87 W/kg
Maximum value of SAR (measured) = 6.32 W/kg

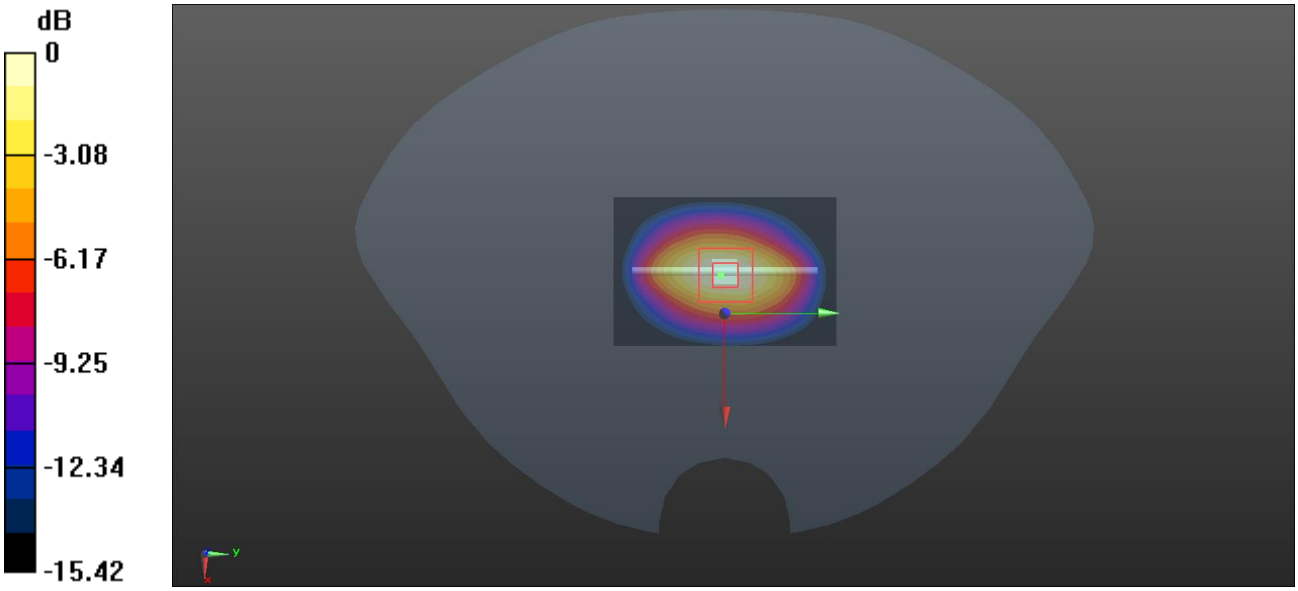

0 dB = 6.32 W/kg = 8.01 dBW/kg

System Performance 1900MHz

DUT: D1900V2; Type: 1900 MHz; Serial: 543

Communication System: CW; Frequency: 1900 MHz;Duty Cycle: 1:1
Medium parameters used: f = 1900 MHz; σ = 1.423 S/m; ε_r = 39.654; ρ = 1000 kg/m^3
Phantom section: Flat Section

DASY5 Configuration:

- Probe: EX3DV4 - SN7522; ConvF(7.79, 7.79, 7.79) @ 1900 MHz; Calibrated: 2022/5/6
- Sensor-Surface: 1.4mm (Mechanical Surface Detection)
- Electronics: DAE4 Sn1354; Calibrated: 2021/9/1
- Phantom: Twin SAM; Type: Twin SAM V5.0; Serial: TP:1412
- Measurement SW: DASY52, Version 52.10 (2); SEMCAD X Version 14.6.12 (7470)

Area Scan (41x61x1): Interpolated grid: dx=1.500 mm, dy=1.500 mm
Maximum value of SAR (interpolated) = 6.44 W/kg

Zoom Scan (5x5x7)/Cube 0: Measurement grid: dx=8mm, dy=8mm, dz=5mm
Reference Value = 51.25 V/m; Power Drift = 0.12 dB
Peak SAR (extrapolated) = 7.19 W/kg
SAR(1 g) = 3.91 W/kg; SAR(10 g) = 2.01 W/kg
Maximum value of SAR (measured) = 6.12 W/kg

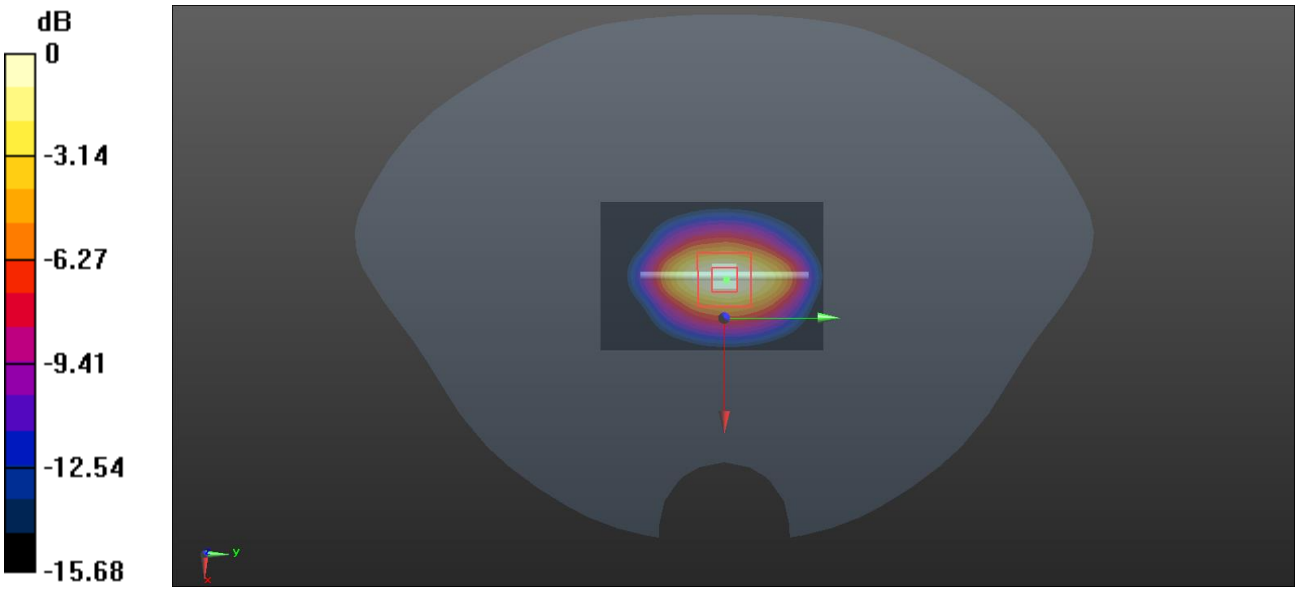

0 dB = 6.12 W/kg = 7.87 dBW/kg

5. EUT TEST STRATEGY AND METHODOLOGY

5.1 Test Positions for Device Operating Next to a Person's Ear

This category includes most wireless handsets with fixed, retractable or internal antennas located toward the top half of the device, with or without a foldout, sliding or similar keypad cover. The handset should have its earpiece located within the upper ¼ of the device, either along the centerline or off-centered, as perceived by its users. This type of handset should be positioned in a normal operating position with the "test device reference point" located along the "vertical centerline" on the front of the device aligned to the "ear reference point". The "test device reference point" should be located at the same level as the center of the earpiece region. The "vertical centerline" should bisect the front surface of the handset at its top and bottom edges. A "ear reference point" is located on the outer surface of the head phantom on each ear spacer. It is located 1.5 cm above the center of the ear canal entrance in the "phantom reference plane" defined by the three lines joining the center of each "ear reference point" (left and right) and the tip of the mouth.

A handset should be initially positioned with the earpiece region pressed against the ear spacer of a head phantom. For the SCC-34/SC-2 head phantom, the device should be positioned parallel to the "N-F" line defined along the base of the ear spacer that contains the "ear reference point". For interim head phantoms, the device should be positioned parallel to the cheek for maximum RF energy coupling. The "test device reference point" is aligned to the "ear reference point" on the head phantom and the "vertical centerline" is aligned to the "phantom reference plane". This is called the "initial ear position". While maintaining these three alignments, the body of the handset is gradually adjusted to each of the following positions for evaluating SAR:

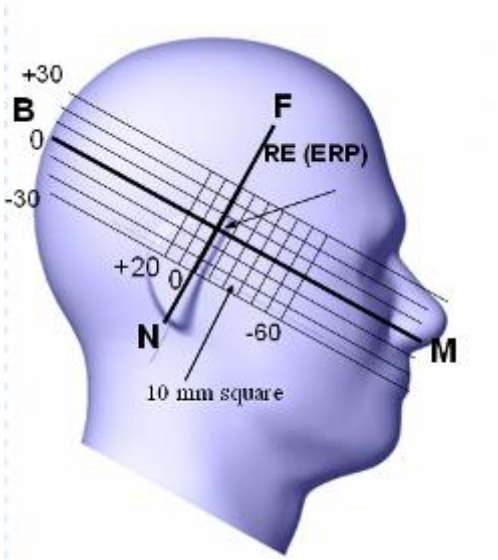

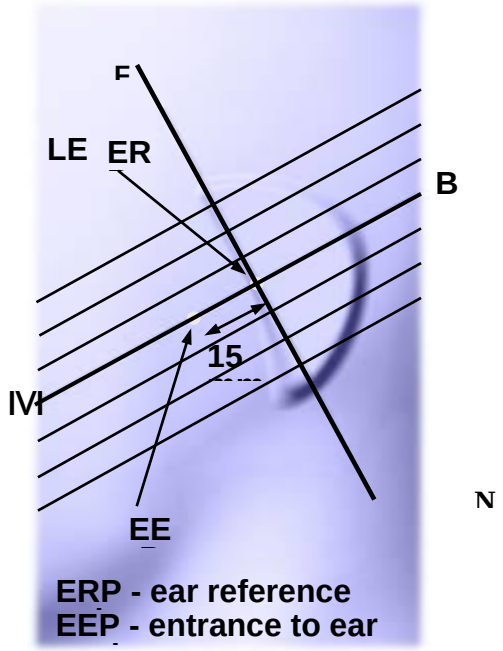

5.2 Cheek/Touch Position

The device is brought toward the mouth of the head phantom by pivoting against the "ear reference point" or along the "N-F" line for the SCC-34/SC-2 head phantom.

This test position is established:

When any point on the display, keypad or mouthpiece portions of the handset is in contact with the phantom.

(or) When any portion of a foldout, sliding or similar keypad cover opened to its intended self-adjusting normal use position is in contact with the cheek or mouth of the phantom.

For existing head phantoms – when the handset loses contact with the phantom at the pivoting point, rotation should continue until the device touches the cheek of the phantom or breaks its last contact from the ear spacer.

Cheek /Touch Position

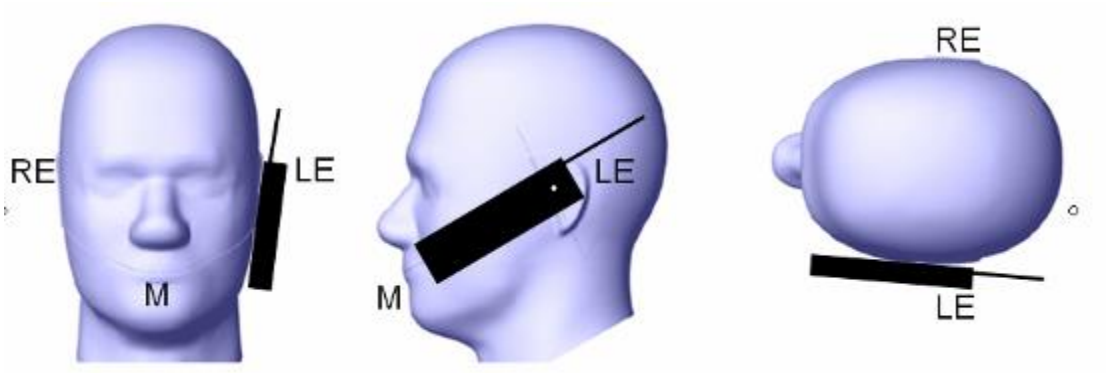

5.3 Ear/Tilt Position

With the handset aligned in the "Cheek/Touch Position":

1) If the earpiece of the handset is not in full contact with the phantom's ear spacer (in the "Cheek/Touch position") and the peak SAR location for the "Cheek/Touch" position is located at the ear spacer region or corresponds to the earpiece region of the handset, the device should be returned to the "initial ear position" by rotating it away from the mouth until the earpiece is in full contact with the ear spacer.

2) (otherwise) The handset should be moved (translated) away from the cheek perpendicular to the line passes through both "ear reference points" (note: one of these ear reference points may not physically exist on a split head model) for approximate 2-3 cm. While it is in this position, the device handset is tilted away from the mouth with respect to the "test device reference point" until the inside angle between the vertical centerline on the front surface of the phone and the horizontal line passing through the ear reference point is by 15 80 °. After the tilt, it is then moved (translated) back toward the head perpendicular to the line passes through both "ear reference points" until the device touches the phantom or the ear spacer. If the antenna touches the head first, the positioning process should be repeated with a tilt angle less than 15 °so that the device and its antenna would touch the phantom simultaneously. This test position may require a device holder or positioner to achieve the translation and tilting with acceptable positioning repeatability.

If a device is also designed to transmit with its keypad cover closed for operating in the head position, such positions should also be considered in the SAR evaluation. The device should be tested on the left and

right side of the head phantom in the “Cheek/Touch” and “Ear/Tilt” positions. When applicable, each configuration should be tested with the antenna in its fully extended and fully retracted positions. These test configurations should be tested at the high, middle and low frequency channels of each operating mode; for example, AMPS, CDMA, and TDMA. If the SAR measured at the middle channel for each test configuration (left, right, Cheek/Touch, Tilt/Ear, extended and retracted) is at least 2.0 dB lower than the SAR limit, testing at the high and low channels is optional for such test configuration(s). If the transmission band of the test device is less than 10 MHz, testing at the high and low frequency channels is optional.

Ear /Tilt 15° Position

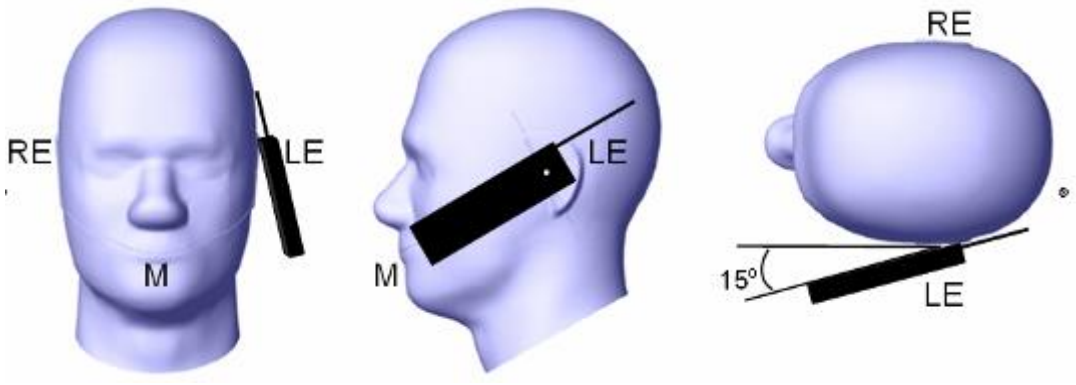

5.4 Test positions for body-worn and other configurations

Body-worn operating configurations should be tested with the belt-clips and holsters attached to the device and positioned against a flat phantom in normal use configurations. Devices with a headset output should be tested with a headset connected to the device. When multiple accessories that do not contain metallic components are supplied with the device, the device may be tested with only the accessory that dictates the closest spacing to the body. When multiple accessories that contain metallic components are supplied with the device, the device must be tested with each accessory that contains a unique metallic component. If multiple accessories share an identical metallic component (e.g., the same metallic belt-clip used with different holsters with no other metallic components), only the accessory that dictates the closest spacing to the body must be tested.

Body-worn accessories may not always be supplied or available as options for some devices that are intended to be authorized for body-worn use. A separation distance of 1.5 cm between the back of the device and a flat phantom is recommended for testing body-worn SAR compliance under such circumstances. Other separation distances may be used, but they should not exceed 2.5 cm. In these cases, the device may use body-worn accessories that provide a separation distance greater than that tested for the device provided however that the accessory contains no metallic components.

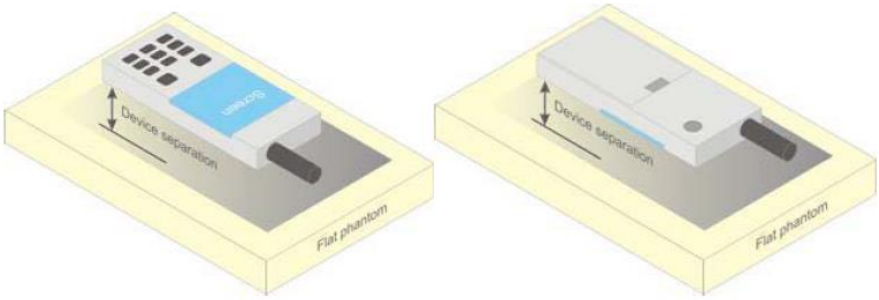

Figure 5 – Test positions for body-worn devices

5.5 Test Distance for SAR Evaluation

In this case the DUT(Device Under Test) is set directly against the phantom, the test distance is 0mm for Body Back mode; for Face Up mode the distance is 10mm.

5.6 SAR Evaluation Procedure

The evaluation was performed with the following procedure:

Step 1: Measurement of the SAR value at a fixed location above the ear point or central position was used as a reference value for assessing the power drop. The SAR at this point is measured at the start of the test and then again at the end of the testing.

Step 2: The SAR distribution at the exposed side of the head was measured at a distance of 4 mm from the inner surface of the shell. The area covered the entire dimension of the head or radiating structures of the EUT, the horizontal grid spacing was 15 mm x 15 mm, and the SAR distribution was determined by integrated grid of 1.5mm x 1.5mm. Based on these data, the area of the maximum absorption was determined by spline interpolation. The first Area Scan covers the entire dimension of the EUT to ensure that the hotspot was correctly identified.

Step 3: Around this point, a volume of 30 mm x 30 mm x 30 mm was assessed by measuring 7x 7 x 7 points. On the basis of this data set, the spatial peak SAR value was evaluated under the following procedure:

1) The data at the surface were extrapolated, since the center of the dipoles is 1.2 mm away from the tip of the probe and the distance between the surface and the lowest measuring point is 1.3 mm. The extrapolation was based on a least square algorithm. A polynomial of the fourth order was calculated through the points in z-axes. This polynomial was then used to evaluate the points between the surface and the probe tip.

2) The maximum interpolated value was searched with a straightforward algorithm. Around this maximum the SAR values averaged over the spatial volumes (1 g or 10 g) were computed by the 3D-Spline interpolation algorithm. The 3D-Spline is composed of three one dimensional splines with the “Not a knot"-condition (in x, y and z-directions). The volume was integrated with the trapezoidal-algorithm. One thousand points (10 x 10 x 10) were interpolated to calculate the averages.

All neighboring volumes were evaluated until no neighboring volume with a higher average value was found.

Step 4: Re-measurement of the SAR value at the same location as in Step 1. If the value changed by more than 5%, the evaluation was repeated.

6. CONDUCTED OUTPUT POWER MEASUREMENT

6.1 Test Procedure

The RF output of the transmitter was connected to the input of the Power Meter through Connector.

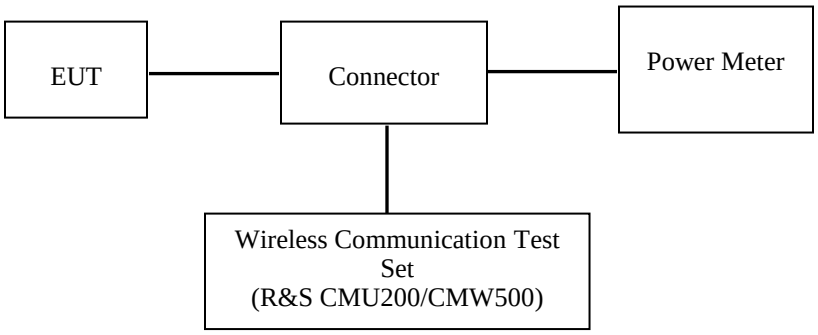

WCDMA/LTE

6.2 Description of Test Configuration

EUT Operation Condition:

EUT Operation Mode:	The system was configured for testing in each operation mode.
Equipment Modifications:	No
EUT Exercise Software:	No

The maximum power was configured per 3GPP Standard for each operation modes as below setting:

WCDMA-Release 99

The following tests were conducted according to the test requirements outlines in section 5.2 of the 3GPP TS34.121-1 specification. The EUT has a nominal maximum output power of 24dBm (+1.7/-3.7).

WCDMA General Settings	Loopback Mode	Test Mode 1
	Rel99 RMC	12.2kbps RMC
	Power Control Algorithm	Algorithm2
	βc / βd	8/15

WCDMA HSDPA

The following tests were conducted according to the test requirements outlines in section 5.2 of the 3GPP TS34.121-1 specification.

	Mode	HSDPA	HSDPA	HSDPA	HSDPA
	Subset	1	2	3	4
WCDMA General Settings	Loopback Mode	Test Mode 1			
	Rel99 RMC	12.2kbps RMC			
	HSDPA FRC	H-Set1			
	Power Control Algorithm	Algorithm2			
	βc	2/15	12/15	15/15	15/15
	βd	1 /15	15/15	8/15	4/15
	βd (SF)	64			
	βc/ βd	2/15	12/15	15/8	15/4
	βhs	4/15	24/15	30/15	30/15
	MPR(dB)	0	0	0.5	0.5
HSDPA Specific Settings	DACK	8			
	DNAK	8			
	DCQI	8			
	Ack-Nack repetition factor	3			
	CQI Feedback	4ms			
	CQI Repetition Factor	2			
	Ahs=βhs/ βc	30/15			

WCDMA HSUPA

The following tests were conducted according to the test requirements outlines in section 5.2 of the 3GPP TS34.121-1 specification.

	Mode	**HSUPA**	**HSUPA**	**HSUPA**	**HSUPA**	**HSUPA**
	Subset	**1**	**2**		**4**	**5**
WCDMA General Settings	Loopback Mode	Test Mode 1				
	Rel99 RMC	12.2kbps RMC				
	HSDPA FRC	H-Set1				
	HSUPA Test	HSUPA Loopback				
	Power Control Algorithm	Algorithm2				
	βc	11/15	6/15	15/15	2/15	15/15
	βd	15/15	15/15	9/15	15/15	0
	βec	209/225	12/15	30 15	2/15	5/15
	βc/ βd	11/15	6/15	15/9	2/15	-
	βhs	22/15	12/15	30/15	4/15	5/15
	CM(dB)	1.0	3.0	2.0	3.0	1.0
	MPR(dB)	0	2	1	2	0
HSDPA Specific Settings	DACK	8				
	DNAK	8				
	DCQI	8				
	Ack-Nack repetition factor	3				
	CQI Feedback	4ms				
	CQI Repetition Factor	2				
	Ahs=βhs/ βc	30/15				
HSUPA Specific Settings	DE-DPCCH	6	8	8	5	7
	DHARQ	0	0	0	0	0
	AG Index	20	12	15	17	21
	ETFCI	75	67	92	71	81
	Associated Max UL Data Rate k ps	242.1	174.9	482.8	205.8	308.9
	Reference E_FCls	E-TFCI 11 E E-TFCI PO 4 E-TFCI 67 E-TFCI PO 18 E-TFCI 71 E-TFCI PO23 E-TFCI 75 E-TFCI PO26 E-TFCI 81 E-TFCI PO 27		E-TFCI 11 E-TFCI PO4 E-TFCI 92 E-TFCI PO 18	E-TFCI 11 E E-TFCI PO 4 E-TFCI 67 E-TFCI PO 18 E-TFCI 71 E-TFCI PO23 E-TFCI 75 E-TFCI PO26 E-TFCI 81 E-TFCI PO 27	

LTE (FDD):

The following tests were conducted according to the test requirements in 3GPP TS36.101

The following tests were conducted according to the test requirements outlined in section 6.2 of the 3GPP TS36.101 specification.

UE Power Class: 3 (23 +/- 2dBm). The allowed Maximum Power Reduction (MPR) for the maximum output power due to higher order modulation and transmit bandwidth configuration (resource blocks) is specified in Table 6.2.3-1 of the 3GPP TS36.101.

Table 6.2.3-1: Maximum Power Reduction (MPR) for Power Class 3

Modulation	Channel bandwidth / Transmission bandwidth (RB)						MPR (dB)
	1.4 MHz	3.0 MHz	5 MHz	10 MHz	15 MHz	20 MHz	
QPSK	> 5	> 4	> 8	> 12	> 16	> 18	≤ 1
16 QAM	≤ 5	≤ 4	≤ 8	≤ 12	≤ 16	≤ 18	≤ 1
16 QAM	> 5	> 4	> 8	> 12	> 16	> 18	≤ 2

The allowed A-MPR values specified below in Table 6.2.4.-1 of 3GPP TS36.101 are in addition to the allowed MPR requirements. All the measurements below were performed with A-MPR disabled, by using Network Signaling Value of "NS_01".

Table 6.2.4-1: Additional Maximum Power Reduction (A-MPR)

Network Signalling value	Requirements (sub-clause)	E-UTRA Band	Channel bandwidth (MHz)	Resources Blocks (N_{RB})	A-MPR (dB)
NS_01	6.6.2.1.1	Table 5.5-1	1.4, 3, 5, 10, 15, 20	Table 5.6-1	NA
NS_03	6.6.2.2.1	2, 4,10, 23, 25, 35, 36	3	>5	≤ 1
			5	>6	≤ 1
			10	>6	≤ 1
			15	>8	≤ 1
			20	>10	≤ 1
NS_04	6.6.2.2.2	41	5	>6	≤ 1
			10, 15, 20	See Table 6.2.4-4	
NS_05	6.6.3.3.1	1	10,15,20	≥ 50	≤ 1
NS_06	6.6.2.2.3	12, 13, 14, 17	1.4, 3, 5, 10	Table 5.6-1	n/a
NS_07	6.6.2.2.3 6.6.3.3.2	13	10	Table 6.2.4-2	Table 6.2.4-2
NS_08	6.6.3.3.3	19	10, 15	> 44	≤ 3
NS_09	6.6.3.3.4	21	10, 15	> 40	≤ 1
				> 55	≤ 2
NS_10		20	15, 20	Table 6.2.4-3	Table 6.2.4-3
NS_11	6.6.2.2.1	23[1]	1.4, 3, 5, 10	Table 6.2.4-5	Table 6.2.4-5
..					
NS_32	-	-	-	-	-
Note 1: Applies to the lower block of Band 23, i.e. a carrier placed in the 2000-2010 MHz region.					

6.3 Maximum Target Output Power

Max Target Power(dBm)			
Mode/Band	**Channel**		
	Low	**Middle**	**High**
WCDMA Band 2	23.5	23.5	23.5
HSDPA	23.5	23.5	23.5
HSUPA	23.5	23.5	23.5
WCDMA Band 4	23.5	23.5	23.5
HSDPA	23.5	23.5	23.5
HSUPA	23.5	23.5	23.5
WCDMA Band 5	23.5	23.5	23.5
HSDPA	23.5	23.5	23.5
HSUPA	23.5	23.5	23.5
LTE Band 2	24	24	24
LTE Band 4	24	24	24
LTE Band 5	24.5	24.5	24.5
LTE Band 12	24	24	24
LTE Band 13	24	24	24
LTE Band 14	24	24	24
LTE Band 66	24	24	24
LTE Band 71	24	24	24

6.4 Test Results:

WCDMA:
Results (12.2kbps RMC)

Band	Frequency (MHz)	RF Output Power (dBm)
WCDMA Band 2	1852.4	22.32
	1880	22.26
	1907.6	**22.39**
WCDMA Band 4	1712.4	**22.31**
	1732.6	22.21
	1752.6	22.28
WCDMA Band 5	826.4	**22.79**
	836.6	22.29
	846.6	22.27

Results (HSDPA)

Band	Frequency (MHz)	RF Output Power (dBm)			
		Subset 1	Subset 2	Subset 3	Subset 4
WCDMA Band 2	1852.4	22.12	20.52	21.98	21.46
	1880	21.68	22.43	22.00	21.63
	1907.6	21.68	20.72	21.83	21.50
WCDMA Band 4	1712.4	21.61	20.62	21.77	21.56
	1732.6	20.65	20.59	22.00	21.53
	1752.6	21.45	21.41	22.02	21.57
WCDMA Band 5	826.4	21.91	21.45	20.92	22.37
	836.6	21.81	21.39	20.75	22.42
	846.6	22.06	21.27	21.79	22.25

Results (HSUPA)

Band	Frequency (MHz)	RF Output Power (dBm)				
		Subset 1	Subset 2	Subset 3	Subset 4	Subset 5
WCDMA Band 2	1852.4	21.83	22.25	21.80	21.11	21.07
	1880	21.92	21.57	21.86	21.30	20.92
	1907.6	21.66	21.50	21.84	21.26	20.84
WCDMA Band 4	1712.4	21.61	21.45	21.80	21.33	20.77
	1732.6	21.67	21.51	21.92	21.44	20.91
	1752.6	20.89	22.28	21.84	21.40	20.89
WCDMA Band 5	826.4	21.77	21.36	20.77	20.53	21.65
	836.6	21.84	21.26	20.75	22.26	21.69
	846.6	21.56	21.30	20.87	21.38	21.88

Note:

1. The default test configuration is to measure SAR with an established radio link between the EUT and a communication test set using a 12.2 kbps RMC (reference measurement Channel) Configured in Test Loop Model 1.
2. KDB 941225 D01-Body SAR is not required for HSDPA/HSUPA when the maximum average output of each RF channel is less than ¼ dB higher than measured 12.2kbps RMC or the maximum SAR for 12.2kbps RMC is < 75% of SAR limit.

LTE Band 2:

Test Bandwidth	Test Modulation	Resource Block & RB offset	Target MPR	Meas MPR	Low Channel (dBm)	Middle Channel (dBm)	High Channel (dBm)
1.4M	QPSK	RB1#0	0	0	22.64	22.31	22.28
		RB1#3	0	0	22.59	22.49	22.56
		RB1#5	0	0	22.53	22.32	22.35
		RB3#0	1	1	22.39	22.22	22.48
		RB3#3	1	1	22.37	22.14	22.45
		RB6#0	1	1	21.39	21.25	21.47
	16-QAM	RB1#0	1	1	21.44	21.48	21.45
		RB1#3	1	1	21.51	21.6	21.51
		RB1#5	2	2	21.48	21.29	21.35
		RB3#0	2	2	21.38	21.38	21.55
		RB3#3	2	2	21.31	21.33	21.47
		RB6#0	2	2	20.35	20.44	20.59
3M	QPSK	RB1#0	0	0	22.42	22.1	22.49
		RB1#8	0	0	22.36	22.14	22.42
		RB1#14	0	0	22.41	22.25	22.49
		RB6#0	1	1	21.32	21.24	21.48
		RB6#9	1	1	21.5	21.11	21.44
		RB15#0	1	1	21.38	21.37	21.42
	16-QAM	RB1#0	1	1	21.12	21.2	21.4
		RB1#8	1	1	21.09	20.97	21.6
		RB1#14	1	1	21.16	21.04	21.39
		RB6#0	2	2	20.38	20.28	20.63
		RB6#9	2	2	20.25	20.2	20.45
		RB15#0	2	2	20.32	20.31	20.58
5M	QPSK	RB1#0	0	0	22.4	21.98	22.49
		RB1#13	0	0	22.26	22.04	22.37
		RB1#24	0	0	22.27	22.17	22.42
		RB15#0	1	1	21.4	21.25	21.41
		RB15#10	1	1	21.32	21.31	21.46
		RB25#0	1	1	21.42	21.34	21.4
	16-QAM	RB1#0	1	1	21.39	21.25	21.48
		RB1#13	1	1	21.35	21.28	21.62
		RB1#24	1	1	21.23	21.48	21.75
		RB15#0	2	2	20.44	20.19	20.48
		RB15#10	2	2	20.37	20.22	20.44
		RB25#0	2	2	20.35	20.28	20.53

Test Bandwidth	Test Modulation	Resource Block & RB offset	Target MPR	Meas MPR	Low Channel (dBm)	Middle Channel (dBm)	High Channel (dBm)
10M	QPSK	RB1#0	0	0	**22.68**	22.12	22.51
		RB1#25	0	0	22.5	22.34	22.65
		RB1#49	1	1	22.41	22.28	22.63
		RB25#0	1	1	21.43	21.34	21.26
		RB25#25	1	1	21.42	21.27	21.64
		RB50#0	1	1	21.48	21.14	21.42
	16-QAM	RB1#0	1	1	21.47	21.21	21.69
		RB1#25	1	1	21.16	21.32	21.8
		RB1#49	1	1	21.19	21.21	21.95
		RB25#0	2	2	20.42	20.28	20.35
		RB25#25	2	2	20.5	20.35	20.69
		RB50#0	2	2	20.43	20.29	20.45
15M	QPSK	RB1#0	0	0	22.47	22.08	22.17
		RB1#38	0	0	22.4	22.12	22.2
		RB1#74	1	1	22.3	22.15	22.29
		RB36#0	1	1	21.33	21.15	21.36
		RB36#39	1	1	21.25	21.19	21.55
		RB75#0	1	1	21.26	21.14	21.33
	16-QAM	RB1#0	1	1	21.39	20.95	20.98
		RB1#38	1	1	21.14	21.1	21.45
		RB1#74	2	2	21.09	21.17	21.58
		RB36#0	2	2	20.51	20.3	20.42
		RB36#39	2	2	20.23	20.34	20.6
		RB75#0	2	2	20.36	20.29	20.37
20M	QPSK	RB1#0	0	0	22.4	22.29	22.22
		RB1#50	0	0	22.42	22.53	22.37
		RB1#99	0	0	22.29	22.15	22.39
		RB50#0	1	1	22.38	22.4	22.22
		RB50#50	1	1	21.96	21.94	21.87
		RB100#0	1	1	21.41	21.27	21.43
	16-QAM	RB1#0	1	1	21.57	21	21.25
		RB1#50	1	1	21.42	21.26	21.49
		RB1#99	2	2	21.47	21.09	21.52
		RB50#0	2	2	20.49	20.32	20.37
		RB50#50	2	2	20.38	20.29	20.4
		RB100#0	2	2	20.32	20.37	20.35

LTE Band 4:

Test Bandwidth	Test Modulation	Resource Block & RB offset	Target MPR	Meas MPR	Low Channel (dBm)	Middle Channel (dBm)	High Channel (dBm)
1.4M	QPSK	RB1#0	0	0	22.27	22.27	22.19
		RB1#3	0	0	22.25	22.35	22.34
		RB1#5	0	0	22.24	22.22	22.3
		RB3#0	1	1	22.08	22.19	22.2
		RB3#3	1	1	21.99	22.29	22.16
		RB6#0	1	1	21.09	21.35	21.23
	16-QAM	RB1#0	1	1	21.13	21.22	21.24
		RB1#3	1	1	21.29	21.34	21.28
		RB1#5	2	2	21.22	21.24	21.19
		RB3#0	2	2	21.11	21.31	21.17
		RB3#3	2	2	21.2	21.34	21.37
		RB6#0	2	2	20.2	20.44	20.11
3M	QPSK	RB1#0	0	0	22.2	22.46	22.29
		RB1#8	0	0	22.28	22.41	22.14
		RB1#14	0	0	22.29	22.5	22.4
		RB6#0	1	1	21.21	21.28	21.08
		RB6#9	1	1	21.42	21.61	21.19
		RB15#0	1	1	21.5	21.51	21.26
	16-QAM	RB1#0	1	1	21.32	21.26	21.31
		RB1#8	1	1	21.4	21.29	21.2
		RB1#14	1	1	21.22	21.65	21.33
		RB6#0	2	2	20.23	20.31	20.29
		RB6#9	2	2	20.41	20.45	20.14
		RB15#0	2	2	20.3	20.35	20.33
5M	QPSK	RB1#0	0	0	22.17	22.45	22.32
		RB1#13	0	0	22.22	22.42	22.36
		RB1#24	0	0	22.18	**22.71**	22.39
		RB15#0	1	1	21.37	21.48	21.41
		RB15#10	1	1	21.32	21.6	21.37
		RB25#0	1	1	21.41	21.54	21.38
	16-QAM	RB1#0	1	1	21.28	21.57	21.56
		RB1#13	1	1	21.29	21.48	21.45
		RB1#24	1	1	21.17	21.74	21.65
		RB15#0	2	2	20.39	20.46	20.46
		RB15#10	2	2	20.32	20.57	20.36
		RB25#0	2	2	20.32	20.55	20.44

Test Bandwidth	Test Modulation	Resource Block & RB offset	Target MPR	Meas MPR	Low Channel (dBm)	Middle Channel (dBm)	High Channel (dBm)
10M	QPSK	RB1#0	0	0	22.36	22.57	22.48
		RB1#25	0	0	22.35	22.61	22.4
		RB1#49	1	1	22.45	22.51	22.54
		RB25#0	1	1	21.52	21.5	21.37
		RB25#25	1	1	21.27	21.46	21.22
		RB50#0	1	1	21.46	21.44	21.42
	16-QAM	RB1#0	1	1	21.31	21.49	21.41
		RB1#25	1	1	21.39	21.54	21.58
		RB1#49	1	1	21.12	21.4	21.62
		RB25#0	2	2	20.4	20.51	20.47
		RB25#25	2	2	20.2	20.64	20.26
		RB50#0	2	2	20.35	20.59	20.49
15M	QPSK	RB1#0	0	0	22.42	22.24	22.37
		RB1#38	0	0	22.42	22.29	22.13
		RB1#74	1	1	22.49	22.33	22.34
		RB36#0	1	1	21.28	21.37	21.41
		RB36#39	1	1	21.32	21.46	21.15
		RB75#0	1	1	21.22	21.38	21.26
	16-QAM	RB1#0	1	1	21.16	21.28	21.33
		RB1#38	1	1	21.18	21.38	21.3
		RB1#74	2	2	21.2	21.4	21.33
		RB36#0	2	2	20.24	20.36	20.37
		RB36#39	2	2	20.41	20.5	20.31
		RB75#0	2	2	20.23	20.45	20.32
20M	QPSK	RB1#0	0	0	22.19	22.3	22.25
		RB1#50	0	0	22.24	22.46	22.45
		RB1#99	0	0	22.28	22.43	22.42
		RB50#0	1	1	21.09	21.29	21.4
		RB50#50	1	1	21.44	21.5	21.31
		RB100#0	1	1	21.33	21.27	21.44
	16-QAM	RB1#0	1	1	21.28	20.74	21.31
		RB1#50	1	1	21.68	21.13	21.43
		RB1#99	2	2	21.59	21.21	21.4
		RB50#0	2	2	20.23	20.41	20.66
		RB50#50	2	2	20.35	20.57	20.33
		RB100#0	2	2	20.38	20.53	20.4

LTE Band 5:

Test Bandwidth	Test Modulation	Resource Block & RB offset	Target MPR	Meas MPR	Low Channel (dBm)	Middle Channel (dBm)	High Channel (dBm)
1.4M	QPSK	RB1#0	0	0	22.9	22.64	22.63
		RB1#3	0	0	22.98	22.89	22.79
		RB1#5	0	0	22.79	22.81	22.79
		RB3#0	1	1	22.63	22.82	22.89
		RB3#3	1	1	22.73	22.74	22.83
		RB6#0	1	1	21.74	21.85	21.89
	16-QAM	RB1#0	1	1	21.99	21.83	21.7
		RB1#3	1	1	22.1	21.86	21.7
		RB1#5	2	2	21.85	21.92	21.74
		RB3#0	2	2	21.64	21.75	21.75
		RB3#3	2	2	21.84	21.75	21.72
		RB6#0	2	2	20.85	20.77	20.87
3M	QPSK	RB1#0	0	0	22.78	22.72	22.98
		RB1#8	0	0	22.66	22.63	22.95
		RB1#14	1	1	22.81	22.84	22.98
		RB6#0	1	1	21.86	22.03	21.89
		RB6#9	1	1	21.8	21.74	21.96
		RB15#0	1	1	21.68	22.04	21.81
	16-QAM	RB1#0	1	1	21.86	21.9	21.86
		RB1#8	1	1	21.63	21.72	21.85
		RB1#14	2	2	21.67	21.71	21.87
		RB6#0	2	2	20.69	20.94	20.79
		RB6#9	2	2	20.72	20.76	20.71
		RB15#0	2	2	20.69	20.96	20.75
5M	QPSK	RB1#0	0	0	22.84	22.58	22.61
		RB1#13	0	0	22.7	22.79	22.87
		RB1#24	0	0	22.84	22.54	22.7
		RB15#0	1	1	21.82	21.82	21.85
		RB15#10	1	1	21.82	21.86	21.88
		RB25#0	1	1	21.8	21.91	21.88
	16-QAM	RB1#0	1	1	21.84	21.71	21.76
		RB1#13	1	1	21.73	21.76	21.96
		RB1#24	1	1	21.74	21.8	21.84
		RB15#0	2	2	20.72	20.95	20.74
		RB15#10	2	2	20.84	20.76	20.76
		RB25#0	2	2	20.72	20.89	20.77

Test Bandwidth	Test Modulation	Resource Block & RB offset	Target MPR	Meas MPR	Low Channel (dBm)	Middle Channel (dBm)	High Channel (dBm)
10M	QPSK	RB1#0	0	0	22.71	22.79	22.83
		RB1#25	0	0	23.28	**23.44**	23.32
		RB1#49	1	1	22.92	22.74	22.96
		RB25#0	1	1	22.45	22.53	22.38
		RB25#25	1	1	21.9	21.89	21.81
		RB50#0	1	1	21.93	21.92	22.01
	16-QAM	RB1#0	1	1	21.63	21.7	21.97
		RB1#25	1	1	21.71	21.93	21.89
		RB1#49	2	2	21.79	21.76	21.91
		RB25#0	2	2	20.67	20.82	20.93
		RB25#25	2	2	20.77	20.95	20.85
		RB50#0	2	2	20.79	20.85	20.93

LTE Band 12:

Test Bandwidth	Test Modulation	Resource Block & RB offset	Target MPR	Meas MPR	Low Channel (dBm)	Middle Channel (dBm)	High Channel (dBm)
1.4M	QPSK	RB1#0	0	0	23.35	23.41	23.57
		RB1#3	0	0	23.64	23.58	23.61
		RB1#5	0	0	23.55	23.4	23.5
		RB3#0	1	1	23.37	23.35	23.59
		RB3#3	1	1	23.35	23.38	23.54
		RB6#0	1	1	22.53	22.45	22.43
	16-QAM	RB1#0	1	1	22.37	22.29	22.68
		RB1#3	1	1	22.4	22.57	22.66
		RB1#5	2	2	22.37	22.37	22.72
		RB3#0	2	2	22.39	22.31	22.45
		RB3#3	2	2	22.42	22.46	22.44
		RB6#0	2	2	21.43	21.35	21.38
3M	QPSK	RB1#0	0	0	23.34	23.42	23.45
		RB1#8	0	0	23.56	23.47	23.48
		RB1#14	0	0	23.4	23.36	**23.66**
		RB6#0	1	1	22.56	22.42	22.68
		RB6#9	1	1	22.49	22.47	22.59
		RB15#0	1	1	22.54	22.47	22.46
	16-QAM	RB1#0	1	1	22.38	22.44	22.64
		RB1#8	1	1	22.26	22.16	22.42
		RB1#14	1	1	22.26	22.48	22.63
		RB6#0	2	2	21.37	21.42	21.47
		RB6#9	2	2	21.43	21.41	21.49
		RB15#0	2	2	21.51	21.39	21.37
5M	QPSK	RB1#0	0	0	23.31	23.39	23.34
		RB1#13	0	0	23.27	23.45	23.59
		RB1#24	0	0	23.54	23.31	23.5
		RB15#0	1	1	22.52	22.46	22.51
		RB15#10	1	1	22.4	22.47	22.4
		RB25#0	1	1	22.37	22.43	22.38
	16-QAM	RB1#0	1	1	22.53	22.36	22.49
		RB1#13	1	1	22.38	22.43	22.72
		RB1#24	1	1	22.51	22.41	22.61
		RB15#0	2	2	21.41	21.45	21.45
		RB15#10	2	2	21.28	21.29	21.45
		RB25#0	2	2	21.3	21.42	21.31

Test Bandwidth	Test Modulation	Resource Block & RB offset	Target MPR	Meas MPR	Low Channel (dBm)	Middle Channel (dBm)	High Channel (dBm)
10M	QPSK	RB1#0	0	0	23.35	23.44	23.46
		RB1#25	0	0	23.51	23.46	23.65
		RB1#49	1	1	23.46	23.26	23.51
		RB25#0	1	1	23.16	23.24	23.14
		RB25#25	1	1	22.38	22.43	22.55
		RB50#0	1	1	22.5	22.44	22.45
	16-QAM	RB1#0	1	1	22.25	22.27	22.49
		RB1#25	1	1	22.52	22.36	22.42
		RB1#49	1	1	22.32	22.13	22.49
		RB25#0	2	2	21.41	21.36	21.39
		RB25#25	2	2	21.56	21.37	21.32
		RB50#0	2	2	21.36	21.38	21.45

LTE Band 13:

Test Bandwidth	Test Modulation	Resource Block & RB offset	Target MPR	Meas MPR	Low Channel (dBm)	Middle Channel (dBm)	High Channel (dBm)
5M	QPSK	1#0	0	0	23.17	23.23	23.42
		1#12	0	0	23.41	23.35	23.33
		1#24	0	0	23.42	23.51	23.64
		12#0	1	1	22.37	23.39	22.43
		12#11	1	1	22.53	22.42	22.47
		25#0	1	1	22.36	22.46	22.63
	16-QAM	1#0	1	1	22.29	22.51	22.63
		1#12	1	1	22.36	22.32	22.4
		1#24	1	1	22.34	22.49	22.58
		12#0	2	2	21.46	21.38	21.04
		12#11	2	2	21.38	21.29	21.33
		25#0	2	2	21.49	21.33	21.4
10M	QPSK	1#0	0	0	/	23.59	/
		1#24	0	0	/	**23.7**	/
		1#49	0	0	/	23.66	/
		25#0	1	1	/	23.23	/
		25#24	1	1	/	23.61	/
		50#0	1	1	/	22.59	/
	16-QAM	1#0	1	1	/	22.44	/
		1#24	1	1	/	22.53	/
		1#49	1	1	/	22.46	/
		25#0	2	2	/	21.34	/
		25#24	2	2	/	21.33	/
		50#0	2	2	/	21.41	/

LTE Band 14:

Test Bandwidth	Test Modulation	Resource Block & RB offset	Target MPR	Meas MPR	Low Channel (dBm)	Middle Channel (dBm)	High Channel (dBm)
5M	QPSK	RB1#0	0	0	23.39	/	23.52
		RB1#13	0	0	23.38	/	23.57
		RB1#24	1	1	23.39	/	23.42
		RB15#0	1	1	22.5	/	22.49
		RB15#10	1	1	22.63	/	22.58
		RB25#0	1	1	22.56	/	22.57
	16-QAM	RB1#0	1	1	22.36	/	22.55
		RB1#13	1	1	22.36	/	22.53
		RB1#24	1	1	22.33	/	22.53
		RB15#0	2	2	21.41	/	21.38
		RB15#10	2	2	21.56	/	21.5
		RB25#0	2	2	21.43	/	21.41
10M	QPSK	RB1#0	0	0	/	**23.64**	/
		RB1#25	0	0	/	23.58	/
		RB1#49	1	1	/	23.6	/
		RB25#0	1	1	/	23.51	/
		RB25#25	1	1	/	23.29	/
		RB50#0	1	1	/	22.66	/
	16-QAM	RB1#0	1	1	/	22.29	/
		RB1#25	1	1	/	22.6	/
		RB1#49	2	2	/	22.39	/
		RB25#0	2	2	/	21.55	/
		RB25#25	2	2	/	21.41	/
		RB50#0	2	2	/	21.5	/

LTE Band 66:

Test Bandwidth	Test Modulation	Resource Block & RB offset	Target MPR	Meas MPR	Low Channel (dBm)	Middle Channel (dBm)	High Channel (dBm)
1.4M	QPSK	RB1#0	0	0	22.5	22.61	22.28
		RB1#3	0	0	22.52	22.74	22.59
		RB1#5	0	0	22.38	22.42	22.39
		RB3#0	1	1	22.42	22.7	22.36
		RB3#3	1	1	22.41	22.67	22.34
		RB6#0	1	1	21.42	21.55	21.24
	16-QAM	RB1#0	1	1	21.43	21.59	21.48
		RB1#3	1	1	21.41	21.51	21.6
		RB1#5	2	2	21.28	21.37	21.38
		RB3#0	2	2	21.37	21.6	21.24
		RB3#3	2	2	21.41	21.47	21.24
		RB6#0	2	2	20.54	20.54	20.43
3M	QPSK	RB1#0	0	0	22.4	22.62	22.51
		RB1#8	0	0	22.3	22.65	22.48
		RB1#14	0	0	22.5	22.43	22.5
		RB6#0	1	1	21.44	21.58	21.49
		RB6#9	1	1	21.39	21.41	21.27
		RB15#0	1	1	21.41	21.58	21.41
	16-QAM	RB1#0	1	1	21.55	21.66	21.69
		RB1#8	1	1	21.24	21.4	21.79
		RB1#14	1	1	21.41	21.21	21.54
		RB6#0	2	2	20.42	20.69	20.48
		RB6#9	2	2	20.27	20.46	20.26
		RB15#0	2	2	20.38	20.55	20.58
5M	QPSK	RB1#0	0	0	22.31	22.83	22.52
		RB1#13	0	0	22.4	22.56	22.4
		RB1#24	0	0	22.42	22.42	22.31
		RB15#0	1	1	21.39	21.58	21.58
		RB15#10	1	1	21.3	21.53	21.43
		RB25#0	1	1	21.43	21.56	21.55
	16-QAM	RB1#0	1	1	21.38	21.6	21.65
		RB1#13	1	1	21.33	21.73	21.56
		RB1#24	1	1	21.4	21.43	21.48
		RB15#0	2	2	20.5	20.58	20.52
		RB15#10	2	2	20.24	20.54	20.43
		RB25#0	2	2	20.31	20.48	20.56

Test Bandwidth	Test Modulation	Resource Block & RB offset	Target MPR	Meas MPR	Low Channel (dBm)	Middle Channel (dBm)	High Channel (dBm)
10M	QPSK	RB1#0	0	0	22.57	**22.9**	22.58
		RB1#25	0	0	22.54	22.78	22.69
		RB1#49	1	1	22.65	22.5	22.39
		RB25#0	1	1	21.53	21.78	21.52
		RB25#25	1	1	21.44	21.47	21.51
		RB50#0	1	1	21.47	21.63	21.64
	16-QAM	RB1#0	1	1	21.19	21.84	21.44
		RB1#25	1	1	21.39	21.73	21.94
		RB1#49	1	1	21.47	21.48	21.31
		RB25#0	2	2	20.43	20.74	20.46
		RB25#25	2	2	20.4	20.55	20.48
		RB50#0	2	2	20.33	20.55	20.51
15M	QPSK	RB1#0	0	0	22.54	22.86	22.28
		RB1#38	0	0	22.5	22.59	22.34
		RB1#74	1	1	22.63	22.64	22.31
		RB36#0	1	1	21.35	21.71	21.29
		RB36#39	1	1	21.53	21.42	21.61
		RB75#0	1	1	21.57	21.7	21.37
	16-QAM	RB1#0	1	1	21.47	21.69	21.22
		RB1#38	1	1	21.26	21.4	21.47
		RB1#74	2	2	21.59	21.43	21.05
		RB36#0	2	2	20.47	20.63	20.34
		RB36#39	2	2	20.49	20.43	20.59
		RB75#0	2	2	20.39	20.67	20.4
20M	QPSK	RB1#0	0	0	22.26	22.7	22.3
		RB1#50	0	0	22.5	22.86	22.72
		RB1#99	0	0	22.46	22.73	22.17
		RB50#0	1	1	22.56	22.77	22.45
		RB50#50	1	1	21.24	21.31	21.39
		RB100#0	1	1	21.42	21.61	21.16
	16-QAM	RB1#0	1	1	21.31	21.52	21.38
		RB1#50	1	1	21.6	21.46	21.34
		RB1#99	2	2	21.34	21.44	21.18
		RB50#0	2	2	20.26	20.58	20.29
		RB50#50	2	2	20.3	20.39	20.49
		RB100#0	2	2	20.27	20.42	20.25

LTE Band 71:

Test Bandwidth	Test Modulation	Resource Block & RB offset	Target MPR	Meas MPR	Low Channel (dBm)	Middle Channel (dBm)	High Channel (dBm)
5M	QPSK	RB1#0	0	0	23.41	23.45	23.44
		RB1#13	0	0	23.42	23.43	23.54
		RB1#24	1	1	23.26	23.2	23.51
		RB15#0	1	1	22.42	22.45	22.55
		RB15#10	1	1	22.61	22.31	22.52
		RB25#0	1	1	22.42	22.48	22.45
	16-QAM	RB1#0	1	1	22.29	22.61	22.63
		RB1#13	1	1	22.54	22.45	22.51
		RB1#24	1	1	22.36	22.56	22.6
		RB15#0	2	2	21.5	21.35	21.43
		RB15#10	2	2	21.55	21.44	21.42
		RB25#0	2	2	21.36	21.48	21.64
10M	QPSK	RB1#0	0	0	**23.7**	23.42	23.44
		RB1#25	0	0	23.67	23.48	23.63
		RB1#49	1	1	23.6	23.44	23.55
		RB25#0	1	1	22.47	22.45	22.42
		RB25#25	1	1	22.5	22.41	22.56
		RB50#0	1	1	22.5	22.5	22.61
	16-QAM	RB1#0	1	1	22.32	22.32	22.48
		RB1#25	1	1	22.58	22.44	22.68
		RB1#49	2	2	22.32	22.43	22.59
		RB25#0	2	2	21.49	21.39	21.38
		RB25#25	2	2	21.54	21.38	21.46
		RB50#0	2	2	21.56	21.45	21.43
15M	QPSK	RB1#0	0	0	23.63	23.27	23.2
		RB1#38	0	0	23.62	23.27	23.23
		RB1#74	1	1	23.5	23.45	23.51
		RB36#0	1	1	22.4	22.35	22.28
		RB36#39	1	1	22.43	22.34	22.52
		RB75#0	1	1	22.27	22.32	22.27
	16-QAM	RB1#0	1	1	22.17	22.32	22.22
		RB1#38	1	1	22.08	22.37	22.04
		RB1#74	1	1	22.32	22.44	22.4
		RB36#0	2	2	21.53	21.32	21.29
		RB36#39	2	2	21.41	21.39	21.6
		RB75#0	2	2	21.37	21.37	21.44

Test Bandwidth	Test Modulation	Resource Block & RB offset	Target MPR	Meas MPR	Low Channel (dBm)	Middle Channel (dBm)	High Channel (dBm)
20M	QPSK	RB1#0	0	0	23.31	23.27	23.02
		RB1#50	0	0	23.43	23.4	23.35
		RB1#99	1	1	23.26	23.41	23.46
		RB50#0	1	1	22.27	22.32	22.23
		RB50#50	1	1	23.15	23.21	23.06
		RB100#0	1	1	22.42	22.32	22.4
	16-QAM	RB1#0	1	1	22.24	22.05	22.24
		RB1#50	1	1	22.51	22.16	22.38
		RB1#99	2	2	22.41	22.33	22.29
		RB50#0	2	2	21.28	21.34	21.18
		RB50#50	2	2	21.36	21.31	21.4
		RB100#0	2	2	21.41	21.34	21.32

7. STANDALONE SAR TEST EXCLUSION CONSIDERATIONS

Antennas Location:

8. SAR MEASUREMENT RESULTS

This page summarizes the results of the performed dosimetric evaluation.

8.1 SAR Test Data

Environmental Conditions

Temperature:	22.3-23.1 ℃	22.5-23.4 ℃
Relative Humidity:	48 %	46 %
ATM Pressure:	100 kPa	100.2 kPa
Test Date:	2022/06/03	2022/06/04

Testing was performed by Karl Gong, Ken Zong, Way Li.

WCDMA Band 2:

EUT Position	Frequency (MHz)	Test Mode	Max. Meas. Power (dBm)	Max. Rated Power (dBm)	1g SAR (W/kg)			
					Scaled Factor	Meas. SAR	Scaled SAR	Plot
Face Up (10mm)	1852.4	RMC	/	/	/	/	/	/
	1880	RMC	22.26	23.5	1.33	0.289	**0.38**	**1#**
	1907.6	RMC	/	/	/	/	/	/
Body Back (0mm)	1852.4	RMC	/	/	/	/	/	/
	1880	RMC	22.26	23.5	1.33	0.248	**0.33**	**2#**
	1907.6	RMC	/	/	/	/	/	/

WCDMA Band 4:

EUT Position	Frequency (MHz)	Test Mode	Max. Meas. Power (dBm)	Max. Rated Power (dBm)	1g SAR (W/kg)			
					Scaled Factor	Meas. SAR	Scaled SAR	Plot
Face Up (10mm)	1712.4	RMC	/	/	/	/	/	/
	1732.6	RMC	22.21	23.5	1.346	0.484	**0.65**	**3#**
	1752.6	RMC	/	/	/	/	/	/
Body Back (0mm)	1712.4	RMC	/	/	/	/	/	/
	1732.6	RMC	22.21	23.5	1.346	0.229	**0.31**	**4#**
	1752.6	RMC	/	/	/	/	/	/

WCDMA Band 5:

EUT Position	Frequency (MHz)	Test Mode	Max. Meas. Power (dBm)	Max. Rated Power (dBm)	1g SAR (W/kg)			
					Scaled Factor	Meas. SAR	Scaled SAR	Plot
Face Up (10mm)	826.4	RMC	/	/	/	/	/	/
	836.6	RMC	22.79	23.5	1.178	0.669	**0.79**	**5#**
	846.6	RMC	/	/	/	/	/	/
Body Back (0mm)	826.4	RMC	/	/	/	/	/	/
	836.6	RMC	22.79	23.5	1.178	0.476	**0.56**	**6#**
	846.6	RMC	/	/	/	/	/	/

Note:

1. When the 1-g SAR is≤ 0.8W/Kg, testing for other channels are optional.
2. The EUT transmit and receive through the same antenna while testing SAR.
3. The default test configuration is to measure SAR with an established radio link between the EUT and a communication test set using a 12.2 kbps RMC (reference measurement Channel) Configured in Test Loop Model.
4. KDB 941225 D01-Body SAR is not required for HSDPA/HSUPA when the maximum average output of each RF channel is less than ¼ dB higher than measured 12.2kbps RMC or the maximum SAR for 12.2kbps RMC is < 75% of SAR limit.
5. When SAR or MPE is not measured at the maximum power level allowed for production units, the results must be scaled to the maximum tune-up tolerance limit according to the power applied to the individual channels tested to determine compliance.

LTE Band 2:

EUT Position	Frequency (MHz)	Bandwidth (MHz)	Test Mode	Max. Meas. Power (dBm)	Max. Rated Power (dBm)	1g SAR (W/kg)			
						Scaled Factor	Meas. SAR	Scaled SAR	Plot
Face Up (10mm)	1860	20	1RB	/	/	/	/	/	/
	1880	20	1RB	22.53	24	1.403	0.440	**0.62**	**7#**
	1900	20	1RB	/	/	/	/	/	/
	1880	20	50%RB	22.4	24	1.445	0.318	0.46	8#
Body Back (0mm)	1860	20	1RB	/	/	/	/	/	/
	1880	20	1RB	22.53	24	1.403	0.187	**0.26**	**9#**
	1900	20	1RB	/	/	/	/	/	/
	1880	20	50%RB	22.4	24	1.445	0.179	0.26	10#

LTE Band 5:

EUT Position	Frequency (MHz)	Bandwidth (MHz)	Test Mode	Max. Meas. Power (dBm)	Max. Rated Power (dBm)	1g SAR (W/kg)			
						Scaled Factor	Meas. SAR	Scaled SAR	Plot
Face Up (10mm)	829	10	1RB	/	/	/	/	/	/
	836.5	10	1RB	23.44	24.5	1.276	0.615	**0.78**	**11#**
	844	10	1RB	/	/	/	/	/	/
	836.5	10	50%RB	22.53	24.5	1.574	0.471	0.74	12#
Body Back (0mm)	829	10	1RB	/	/	/	/	/	/
	836.5	10	1RB	23.44	24.5	1.276	0.387	**0.49**	**13#**
	844	10	1RB	/	/	/	/	/	/
	836.5	10	50%RB	22.53	24.5	1.574	0.296	0.47	14#

LTE Band 12:

EUT Position	Frequency (MHz)	Bandwidth (MHz)	Test Mode	Max. Meas. Power (dBm)	Max. Rated Power (dBm)	1g SAR (W/kg)			
						Scaled Factor	Meas. SAR	Scaled SAR	Plot
Face Up (10mm)	704	10	1RB	/	/	/	/	/	/
	707.5	10	1RB	23.46	24	1.132	0.149	**0.17**	**15#**
	711	10	1RB	/	/	/	/	/	/
	707.5	10	50%RB	23.24	24	1.191	0.127	0.15	16#
Body Back (0mm)	704	10	1RB	/	/	/	/	/	/
	707.5	10	1RB	23.46	24	1.132	0.069	**0.08**	**17#**
	711	10	1RB	/	/	/	/	/	/
	707.5	10	50%RB	23.24	24	1.191	0.057	0.07	18#

LTE Band 13:

EUT Position	Frequency (MHz)	Bandwidth (MHz)	Test Mode	Max. Meas. Power (dBm)	Max. Rated Power (dBm)	1g SAR (W/kg)			
						Scaled Factor	Meas. SAR	Scaled SAR	Plot
Face Up (10mm)	782	10	1RB	23.7	24	1.072	0.481	**0.52**	**19#**
	782	10	50%RB	23.61	24	1.094	0.400	0.44	20#
Body Back (0mm)	782	10	1RB	23.7	24	1.072	0.222	**0.24**	**21#**
	782	10	50%RB	23.61	24	1.094	0.202	0.22	22#

LTE Band 14:

EUT Position	Frequency (MHz)	Bandwidth (MHz)	Test Mode	Max. Meas. Power (dBm)	Max. Rated Power (dBm)	1g SAR (W/kg)			
						Scaled Factor	Meas. SAR	Scaled SAR	Plot
Face Up (10mm)	793	10	1RB	23.64	24	1.086	0.526	**0.57**	**23#**
	793	10	50%RB	23.51	24	1.119	0.417	0.47	24#
Body Back (0mm)	793	10	1RB	23.64	24	1.086	0.344	**0.37**	**25#**
	793	10	50%RB	23.51	24	1.119	0.241	0.27	26#

LTE Band 66&4:

EUT Position	Frequency (MHz)	Bandwidth (MHz)	Test Mode	Max. Meas. Power (dBm)	Max. Rated Power (dBm)	1g SAR (W/kg)			
						Scaled Factor	Meas. SAR	Scaled SAR	Plot
Face Up (10mm)	1720	20	1RB	/	/	/	/	/	/
	1745	20	1RB	22.86	24	1.3	0.474	0.62	27#
	1770	20	1RB	/	/	/	/	/	/
	1745	20	50%RB	22.77	24	1.327	0.485	**0.64**	**28#**
Body Back (0mm)	1720	20	1RB	/	/	/	/	/	/
	1745	20	1RB	22.86	24	1.3	0.225	**0.29**	**29#**
	1770	20	1RB	/	/	/	/	/	/
	1745	20	50%RB	22.77	24	1.327	0.196	0.26	30#

LTE Band 71:

EUT Position	Frequency (MHz)	Bandwidth (MHz)	Test Mode	Max. Meas. Power (dBm)	Max. Rated Power (dBm)	1g SAR (W/kg)			
						Scaled Factor	Meas. SAR	Scaled SAR	Plot
Face Up (10mm)	673	20	1RB	/	/	/	/	/	/
	680.5	20	1RB	23.4	24	1.148	0.109	**0.13**	**31#**
	688	20	1RB	/	/	/	/	/	/
	680.5	20	50%RB	23.21	24	1.199	0.095	0.11	32#
Body Back (0mm)	673	20	1RB	/	/	/	/	/	/
	680.5	20	1RB	23.4	24	1.148	0.063	**0.07**	**33#**
	688	20	1RB	/	/	/	/	/	/
	680.5	20	50%RB	23.21	24	1.199	0.054	0.06	34#

Note:

1. When the 1-g SAR is ≤ 0.8W/Kg, testing for other channels are optional.
2. SAR for LTE band exposure configurations is measured according to the procedures of KDB 941225 D05 SAR for LTE Devices v02.
3. KDB941225D05-SAR for higher order modulation is required only when the highest maximum output power for the configuration in the higher order modulation is > 0.5 dB higher than the same configuration in QPSK or when the reported SAR for the QPSK configuration is > 1.45 W/kg
4. KDB941225D05-For QPSK with 100% RB allocation, when the reported SAR measured for the Highest output power channel is <1.45 W/kg, tests for the remaining required test channels are optional.
5.KDB941225D05- For QPSK with 100% RB allocation, SAR is not required when the highest maximum output power for 100 % RB allocation is less than the highest maximum output power in 50% and 1 RB allocations and the highest reported SAR for 1 RB and 50% RB allocation are ≤ 0.8 W/kg.
6. KDB941225D05- Start with the largest channel bandwidth and measure SAR for QPSK with 1 RB allocation, using the RB offset and required test channel combination with the highest maximum output power among RB offset the upper edge, middle and lower edge of each required test channel.
7. KDB941225D05- other channel bandwidths SAR test is required when the highest maximum output power of a configuration requiring testing in the smaller channel bandwidth is > 0.5 dB higher than the equivalent channel configurations in the largest channel bandwidth configuration or the reported SAR of a configuration for the largest channel bandwidth is > 1.45 W/kg.
8. Worst case SAR for 50% RB allocation is selected to be tested.

9. MEASUREMENT VARIABILITY

In accordance with published RF Exposure KDB procedure 865664 D01 SAR measurement 100 MHz to 6 GHz v01. These additional measurements are repeated after the completion of all measurements requiring the same head or body tissue-equivalent medium in a frequency band. The test device should be returned to ambient conditions (normal room temperature) with the battery fully charged before it is re-mounted on the device holder for the repeated measurement(s) to minimize any unexpected variations in the repeated results

1) Repeated measurement is not required when the original highest measured SAR is < 0.80 W/kg; steps 2) through 4) do not apply.
2) When the original highest measured SAR is ≥ 0.80 W/kg, repeat that measurement once.
3) Perform a second repeated measurement only if the ratio of largest to smallest SAR for the original and first repeated measurements is > 1.20 or when the original or repeated measurement is ≥ 1.45 W/kg (~ 10% from the 1-g SAR limit).
4) Perform a third repeated measurement only if the original, first or second repeated measurement is ≥1.5 W/kg and the ratio of largest to smallest SAR for the original, first and second repeated measurements is > 1.20.

Note: The same procedures should be adapted for measurements according to extremity and occupational exposure limits by applying a factor of 2.5 for extremity exposure and a factor of 5 for occupational exposure to the corresponding SAR thresholds.

The Highest Measured SAR Configuration in Each Frequency Band

Head(Face Up)

SAR probe calibration point	Frequency Band	Freq.(MHz)	EUT Position	Meas. SAR (W/kg)		Largest to Smallest SAR Ratio
				Original	Repeated	
/	/	/	/	/	/	/

Body Back

SAR probe calibration point	Frequency Band	Freq.(MHz)	EUT Position	Meas. SAR (W/kg)		Largest to Smallest SAR Ratio
				Original	Repeated	
/	/	/	/	/	/	/

Note:

1. Second Repeated Measurement is not required since the ratio of the largest to smallest SAR for the original and first repeated measurement is not > 1.20.
2. The measured SAR results **do not** have to be scaled to the maximum tune-up tolerance to determine if repeated measurements are required.
3. SAR measurement variability must be assessed for each frequency band, which is determined by the **SAR probe calibration point and tissue-equivalent medium** used for the device measurements.

10. SAR PLOTS

Please Refer to the Attachment.

APPENDIX A MEASUREMENT UNCERTAINTY

The uncertainty budget has been determined for the measurement system and is given in the following Table.

Measurement uncertainty evaluation for IEEE1528-2013 SAR test

Source of uncertainty	Tolerance/ uncertainty ± %	Probability distribution	Divisor	ci (1 g)	ci (10 g)	Standard uncertainty ± %, (1 g)	Standard uncertainty ± %, (10 g)
Measurement system							
Probe calibration	6.55	N	1	1	1	6.3	6.3
Axial Isotropy	4.7	R	√3	1	1	2.7	2.7
Hemispherical Isotropy	9.6	R	√3	0	0	0.0	0.0
Boundary effect	1.0	R	√3	1	1	0.6	0.6
Linearity	4.7	R	√3	1	1	2.7	2.7
Detection limits	1.0	R	√3	1	1	0.6	0.6
Readout electronics	0.3	N	1	1	1	0.3	0.3
Response time	0.0	R	√3	1	1	0.0	0.0
Integration time	0.0	R	√3	1	1	0.0	0.0
RF ambient conditions – noise	1.0	R	√3	1	1	0.6	0.6
RF ambient conditions– reflections	1.0	R	√3	1	1	0.6	0.6
Probe positioner mech. Restrictions	0.8	R	√3	1	1	0.5	0.5
Probe positioning with respect to phantom shell	6.7	R	√3	1	1	3.9	3.9
Post-processing	2.0	R	√3	1	1	1.2	1.2
Test sample related							
Test sample positioning	2.8	N	1	1	1	2.8	2.8
Device holder uncertainty	6.3	N	1	1	1	6.3	6.3
Drift of output power	5.0	R	√3	1	1	2.9	2.9
Phantom and set-up							
Phantom uncertainty (shape and thickness tolerances)	4.0	R	√3	1	1	2.3	2.3
Liquid conductivity target)	5.0	R	√3	0.64	0.43	1.8	1.2
Liquid conductivity meas.)	2.5	N	1	0.64	0.43	1.6	1.1
Liquid permittivity target)	5.0	R	√3	0.6	0.49	1.7	1.4
Liquid permittivity meas.)	2.5	N	1	0.6	0.49	1.5	1.2
Combined standard uncertainty		RSS				12.2	12.0
Expanded uncertainty 95 % confidence interval)						24.1	23.7

Measurement uncertainty evaluation for IEC62209-1 SAR test

Source of uncertainty	Tolerance/ uncertainty ± %	Probability distribution	Divisor	ci (1 g)	ci (10 g)	Standard uncertainty ± %, (1 g)	Standard uncertainty ± %, (10 g)
Measurement system							
Probe calibration	6.55	N	1	1	1	6.3	6.3
Axial Isotropy	4.7	R	√3	1	1	2.7	2.7
Hemispherical Isotropy	9.6	R	√3	0	0	0.0	0.0
Boundary effect	1.0	R	√3	1	1	0.6	0.6
Linearity	4.7	R	√3	1	1	2.7	2.7
Detection limits	1.0	R	√3	1	1	0.6	0.6
Readout electronics	0.3	N	1	1	1	0.3	0.3
Response time	0.0	R	√3	1	1	0.0	0.0
Integration time	0.0	R	√3	1	1	0.0	0.0
RF ambient conditions – noise	1.0	R	√3	1	1	0.6	0.6
Probe positioning with respect to phantom shell	6.7	R	√3	1	1	3.9	3.9
Probe positioner mech. Restrictions	0.8	R	√3	1	1	0.5	0.5
RF ambient conditions– reflections	1.0	R	√3	1	1	0.6	0.6
Post-processing	2.0	R	√3	1	1	1.2	1.2
Test sample related							
Test sample positioning	2.8	N	1	1	1	2.8	2.8
Device holder uncertainty	6.3	N	1	1	1	6.3	6.3
Drift of output power	5.0	R	√3	1	1	2.9	2.9
Phantom and set-up							
Phantom uncertainty (shape and thickness tolerances)	4.0	R	√3	1	1	2.3	2.3
Liquid conductivity target)	5.0	R	√3	0.64	0.43	1.8	1.2
Liquid conductivity meas.)	2.5	N	1	0.64	0.43	1.6	1.1
Liquid permittivity target)	5.0	R	√3	0.6	0.49	1.7	1.4
Liquid permittivity meas.)	2.5	N	1	0.6	0.49	1.5	1.2
Combined standard uncertainty		RSS				12.2	12.0
Expanded uncertainty 95 % confidence interval)						24.0	23.6

APPENDIX B EUT TEST POSITION PHOTOS

Please Refer to the Attachment.

APPENDIX C CALIBRATION CERTIFICATES

Please Refer to the Attachment.

******* END OF REPORT *******