SR-400

POC RADIO

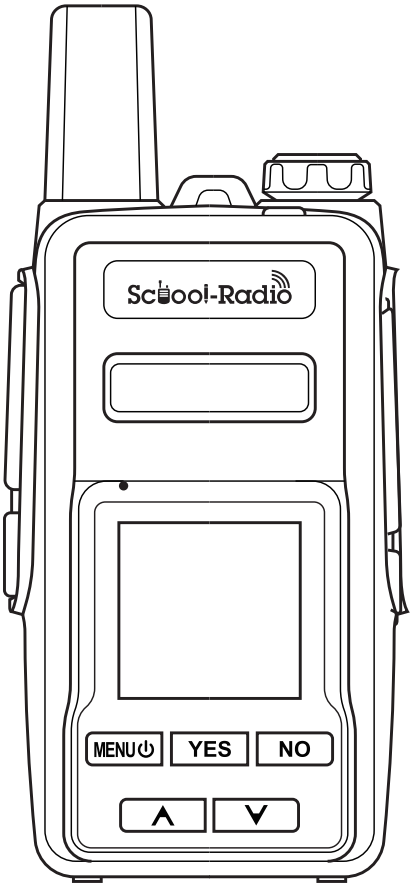

School-Radio

PACKING LIST

No.	Item	No.	Item
1	Radio	4	Belt Clip
2	Battery	5	Hand strap
3	Charger	6	User Manual

Product Overview

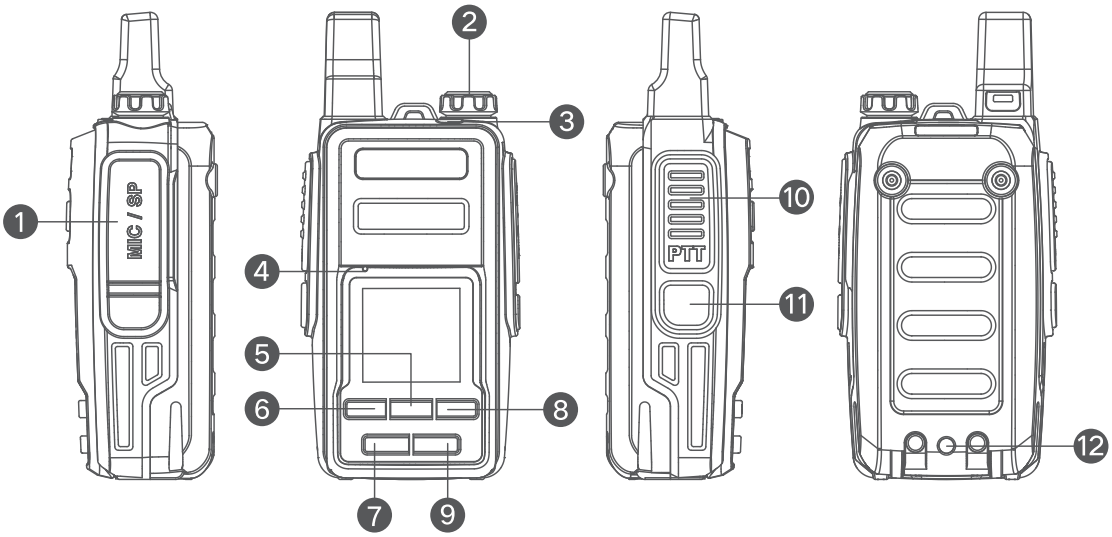

No.	Item	No.	Item
1	USB/Accessory Jack	7	Up Key
2	Volume Knob	8	Return/Lock Key
3	LED Indicator	9	Down Key
4	MIC	10	PTT Key
5	Confirm Key	11	Side key
6	Power/Menu Key	12	Charging Jack

INSTALLING / REMOVING THE BATTERY

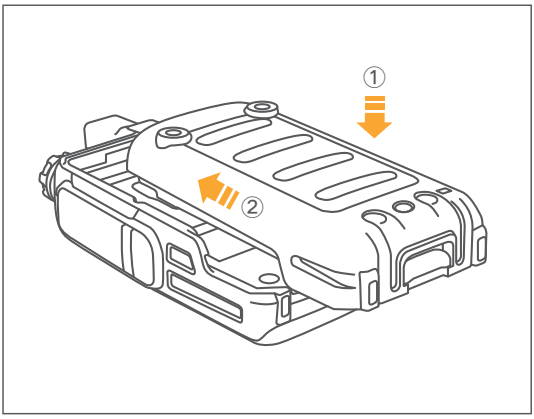

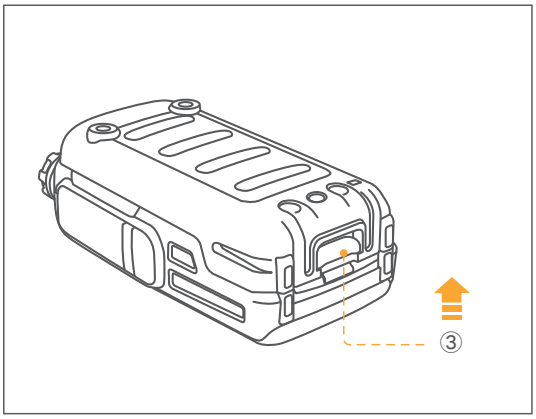

To install the battery, put the battery on the back or the radio, as shown in ①②. Push it horizontally along the slot to the top until it clicks.

To remove the battery, turn off the radio first , push the bottom battery safety lock and remove the battery as shown in ③.

CHARGE BATTERY

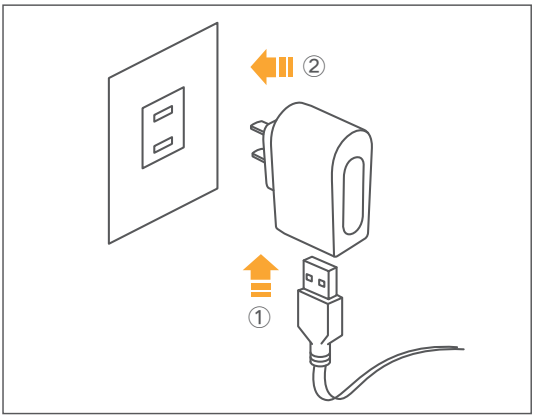

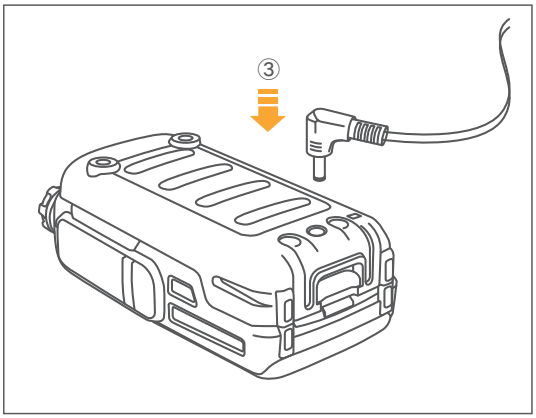

1. As ①② shown, connect the charging cable to the power adapter, then connect the power adapter to the AC power outlet.

2. As shown ③, Connect the charging cable to the charging port on the back of the battery.

3. When the red LED is on, it indicates the radio is charging. When the LED turns green, it indicates the charging is completed.

INSTALL BELT CLIP

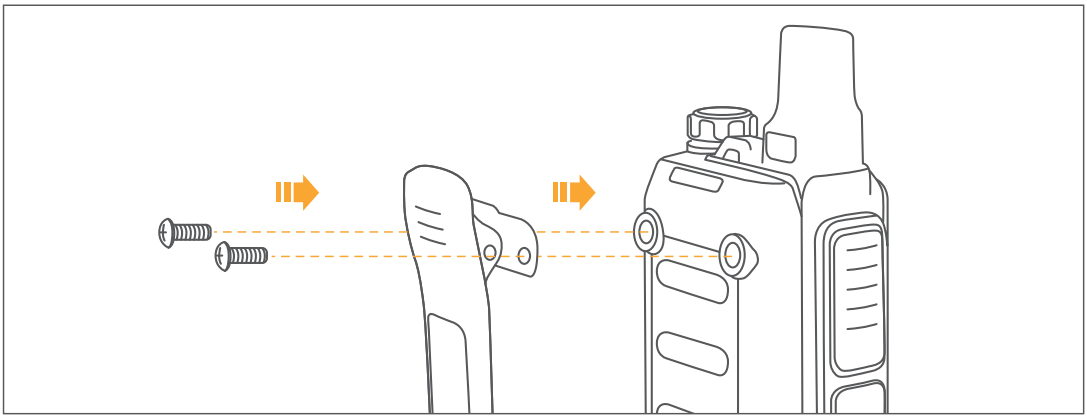

To install the belt clip, remove the screws from the back of the battery and install the belt clip.

INSTALL ACCESSORIES

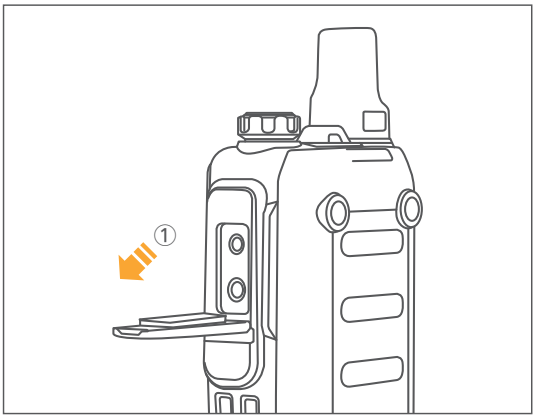

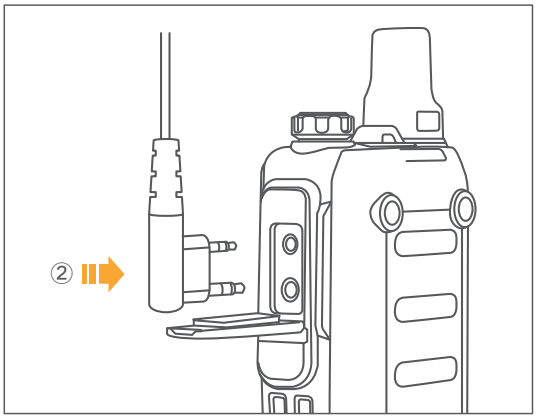

Open the jack cover and insert the earphone/programming cable into the radio. Keep covered if not in use.

BASIC OPERATION

1. Power on/off：
Long press the "power button" until the screen lights up to power on.
Long press the “power button” until the shutdown animation appears to power off.

2. Adjust Volume
Rotate the "volume knob" clockwise to increase the volume, rotate counterclockwise to decrease the volume.

3. Transmit
To make a call, press and hold the PTT key, then speak into the microphone using your normal speaking voice. Release PTT switch to receive.
Hold the microphone approximately 1" from your lips.

4. Function Operations
The radio provides you with a series of functions and lists them in the function menus.

1. Press “menu key” to enter function list.
2. Press “up”/ “down” key to choose required option.
3. If the selected function has a sub-menu at the next level, you can select the desired sub-menu.
4. If the selected function list still has a sub-menu of the next level, repeat Step 3.
5. Choose desired settings.
6. To return to the previous menu, press "return key" to exit.
5. Key lock: Long press “lock key” to lock keyboard, long press again to unlock.

CARE AND CLEANING

To guarantee optimal performance as well as a long service life of the product, please follow the tips below.

- Do not puncture or scratch the product with hard objects.
- Do not place the product in corrosive agents, solutions or water.
- Do not hold the radio by its antenna or external microphone.
- When not in use, keep the accessory jacks covered with the protective flap.

⚠

Power off the product, and remove the battery before cleaning.

- Clean up the dust and fine particles on the product parts with a clean and dry lint-free cloth or a brush regularly.
- Use a non-woven fabric with neutral cleanser to clean the keys, control knobs, and shell after long-time use. Do not use chemical preparations such as stain removers, alcohol, sprays or oil preparations.
- Make sure the product is completely dry before use.

FCC Statement:

Any Changes or modifications not expressly approved by the party responsible for compliance could void the user's authority to operate the equipment.

This device complies with part 15 of the FCC Rules. Operation is subject to the following two conditions:

(1) This device may not cause harmful interference, and

(2) This device must accept any interference received, including interference that may cause undesired operation.

SAR tests are conducted using standard operating positions accepted by FCC with the device transmitting at its highest certified power level in all tested frequency bands, although the SAR is determined at the highest certified power level, the actual SAR level of the device while operating can be well below the maximum value. Before a new model is a available for sale to the public, it must be tested and certified to the FCC that is does not exceed the exposure limit established by the FCC. Tests for each product are performed in positions and locations as required by the FCC.

For body worn operation, this device has been tested and meets the FCC RF exposure guidelines when used with and accessory designated for this product or when used with and accessory that contains no metal.

To maintain compliance with FCC RF exposure guidelines hold the transmitter and antenna at least 10mm from your face and speak in a normal voice, with the antenna pointed up and away from the face.

The equipment complies with FCC radiation exposure limits set forth for and uncontrolled environment. In order to comply with the FCC RF exposure requirement, the antenna installation must comply with following:

Users must be fully aware of the hazards of the exposure and able to exercise control over their RF exposure to qualify for the higher exposure limits.

Your wireless hand-held portable transceiver contains a low power transmitter. This product sends out radio frequency (RF) signals when the Push-to-Talk(PTT) button is pressed.

Note:

This equipment has been tested and found to comply with the limits for a Class B digital device, pursuant to part 15 of the FCC Rules. These limits are designed to provide reasonable protection against harmful interference in a residential installation. This equipment generates, uses and can radiate radio frequency energy and, if not installed and used in accordance with the instructions, may cause harmful interference to radio communications. However, there is no guarantee that interference will not occur in a part icular installation. If this equipment does cause harmful interference to radio or television reception, which can be determined by turning the equipment off and on, the user is encouraged to try to correct the interference by one or more of the following measures:

—Reorient or relocate the receiving antenna.

—Increase the separation between the equipment and receiver.

—Connect the equipment into an outlet on a circuit different from that to which the receiver is connected.

—Consult the dealer or an experienced radio/TV technician for help.