USER MANUAL

X6

Intelligent Mood lamp bluetooth speaker

Please read this user manual carefully before using the device.

Specifications:

Product name:intelligent mood lamp speaker

Charging input: DC5V 1A

Battery capacity:3.7V/2000mAh

Charging time: about 2.5 hours

Speaker specification: Φ52mm

Speaker unite: 4 ohms, 3W

Lighting power: 2.4W.

Material: ABS / PP /Metal

products size: 150x 48mm

Frequency range: 50HZ - 20KHZ

Distortion:<0.5%

SNR: 65Db

Bluetooth Frequency:2.4 GHZ-2.8GHZ

Bluetooth protocol:A2DP1.2

Bluetooth version: V4.2

Bluetooth distance: 10 Meter

Button :

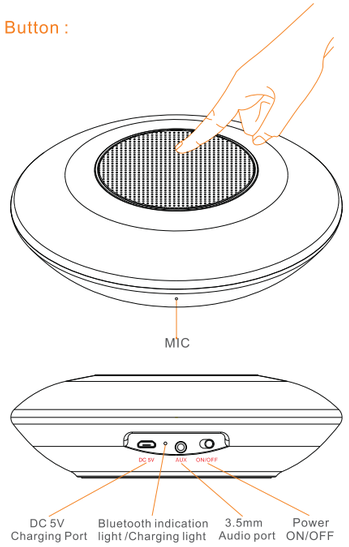

Charging

Please make sure the unit is fully charged before using for the first time. Charge the speaker using the provided USB cable by connecting it to any computer or 5V cell phone charger. The charging LED indicator will remain red while charging and will turn off once the unit is fully charged. Charging time is approximately 4 hours.

Power ON/OFF

Press the button ON/OFF to the "ON",the device will be power on.move to "OFF",the device will be power off.

Light Mode

The device has variety of light modes. Touching the speaker mesh for 5 seconds will switch the unit between lamp mode and color mode.

Lamp Mode: To activate lamp mode simply push the speaker mesh. This will set the lamp to its lowest mode. There are three levels to choose from: low, medium, and high bright. To increase lamp brightness, touch the speaker mesh until desired brightness is achieved. Once the lamp is at its brightest setting, touching the speaker mesh again will turn it off.

Color light:You can change the speaker to multi-color mode (AKA cool mode) by touching the speaker mesh for 3 seconds. Once in this mode, touch the speaker mesh to change colors. Continue touching to reach color cycling mode and rhythm mode.

Mode switch

There are two modes :Bluetooth,aux in mode,The default mode is Bluetooth,it will be aux in mode when inserting the aux in cable.

Bluetooth Mode

When the speaker is turned on it automatically enters Bluetooth mode. If the unit has been previously paired, it will automatically connect to that device. If no device has been paired, upon being powered on, the unit will enter paring mode. The blue indicator LED will flash and you will hear voice prompts. You may only connect one device at a time. To connect a different device, be sure to turn off Bluetooth mode on the curently connected device and follow the corresponding steps below.

When Power on speaker, if without connect the bluetooth after 10 minutes, the bluetooth pairing function will be automatically turn off. If you want to re-connect the bluetooth, need to turn off the power button and then turn on the power to re-activate the bluetooth pairing function.

Mobile Device Pairing:

To connect your mobile device (phone, tablet, MP3 player) enter the Bluetooth settings and search for nearby Bluetooth devices. When you see X6 in the list of available devices, select it. If your device requires a password, enter 0000. Once succesfully paired, the blue indicator LED will stop flashing and remain solid blue.

Connecting To Computer:

Connecting to a desktop computer or laptop is easy. First make sure that the Bluetooth function is on by entering your computers Bluetooth settings and turning it on. While in the Bluetooth menu find the device name X6 and select it. Your computer should pair with the X6. Once succesfully paired, the blue indicator LED will stop flashing and remain solid blue.

Bluetooth Music Playing

Open the player device when the connection is successful. Click to play music, and the Bluetooth speaker will play the music.

You can operate the connected player to control play, pause, volume up and down .

Bluetooth Hands free Call

Answer and hang up the phone.

There will be an alert sound from the speaker when there is a phone call.

Touch the top panel to answer and end the phone.

AUX Input

Use this 3.5mm jack to connect any external audio device such as a mobile phone, MP3 player, tablet, lap top, or computer. When a 3.5mm cable is connected, the unit automatically switches to AUX input mode.

Bluetooth connection notification:

1. If the speaker has been connected with Bluetooth devices before, it will connect with the last Bluetooth device automatically once it is turned on.
2. Other phones or tablets can not be connected with the Bluetooth speaker when the speaker is being connected with a phone or tablet.
3. The phone or tablet can not be connected with the Bluetooth speaker if it is connected with other Bluetooth devices. You should turn off your Bluetooth connection and connect your phone with the Bluetooth speaker.

Frequently Asked Questions

Unsuccessful pairing and connection repeatedly

1. Check the speaker and make sure it is in the searching state or reboot the speaker.
2. Connection is difficult when there are too many Bluetooth devices nearby. Turn off other Bluetooth devices.
3. Turn off the Bluetooth device that was connected with the Bluetooth speaker last time, and reconnect the speaker .

Muted or distorted sound

1. Check the volume of your phone or the speaker, and adjust the volume.
2. The battery is low. Please charge it.

Choppy music play

1. Check if the device is beyond the effective connection distance.
2. Check if there is any obstacle between the speaker and your device.

The indicator not shining in Bluetooth mode

1. The battery is low. Please charge it.
2. Please reboot the speaker.

Frequently Asked Questions

1. Please store and use the product in room temperature environment.
2. Do not expose this product in rain or wet conditions.
3. Do not drop or bump this product.
4. Do not disassemble, repair, or modify the product in private.
5. Please use the power charge with rated voltage for the speaker.
6. It may cause hearing damage if playing music in high volume for a long time. Avoiding excessively high volume when playing music for a long time.
7. Disassemble this product will invalidate the warranty.

FCC Statement

This device complies with Part 15 of the FCC rules. Operation is subject to the following two conditions: 1) this device may not cause harmful interference, and 2) this device must accept any interference received, including interference that may cause undesired operation.

Note: This equipment has been tested and found to comply with the limits for a Class B digital device, pursuant to part 15 of the FCC Rules. These limits are designed to provide reasonable protection against harmful interference in a residential installation. This equipment generates uses and can radiate radio frequency energy and, if not installed and used in accordance with the instructions, may cause harmful interference to radio communications. However, there is no guarantee that interference will not occur in particular installation. If this equipment does cause harmful interference to radio or television reception, which can be determined by turning the equipment off and on, the user is encouraged to try to correct the interference by one or more of the following measures:

--Reorient or relocate the receiving antenna.

--Increase the separation between the equipment and receiver.

--Connect the equipment into an outlet on a circuit different from that to which the receiver is connected.

--Consult the dealer or an experienced radio/TV technician for help.

Changes or modifications not expressly approved by the party responsible for compliance could void the user's authority to operate the equipment.

FCC Radiation Exposure Statement

This device complies with FCC RF radiation exposure limits set forth for an uncontrolled environment. This transmitter must not be co-located or operating in conjunction with any other antenna or transmitter.