VitaLWIFI

VitalWIFI (EX4C01) is designed to bundle with the X4M200, X4M300 sensors. VitalWiFi equips the XeThru sensor modules with standalone power supply and WIFI communication capabilities. The X4M200 and X4M300 can now stream outputs independently and directly to data servers and cloud applications.

Features

- Plug and Go XeThru UWB radar sensor system
- No extra hardware needed
- Standalone power system
- Provides WIFI communication and control;
- Provides power to X4M200 and X4M300;
- Physical interface to mount and secure the sensor
- Compact size
- Multiple encapsulation options
- Compatible with XeThru X4M200 & X4M300

EX4C01 works with X4M200, X4M300

Applications

- WiFi ready Respiration Sensor
  - EX4C01 + X4M200
- WiFi ready Presence Sensor
  - EX4C01 + X4M300

VitalWIFI bridges the X4M200/X4M300 modules to an existing WiFi network. With VitalWIFI, user can easily manage and control the device networking requirement.

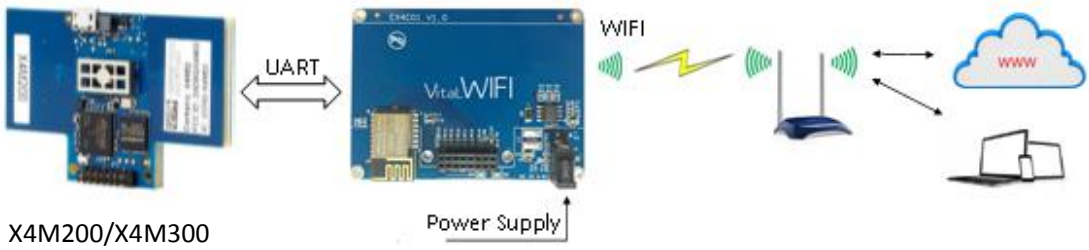

X4M200/X4M300 module

When VitalWiFi is working as a TCP Client, it will initiate request for 2-way

connections with a TCP Server device. Upon successful connection, transparent transmission between Server and Client is enabled. The server end could be a fixed IP from the Internet, or a device within the network with an intranet IP

Plug and Ready to use

No further hardware development required. Using the Vital-WIFI, the XeThru sensor modules can now be managed via WIFI. Users only need to focus on developing the backend software interfaces.

Schematic diagram

VitalWIF(EX4C01) is made up of DC-DC voltage converter, WIFI module， connectors and LED.

- DC-DC converter steps down the +5V DC input to +3.4V DC. Maximum current 1.5A.
- Connector provides power to X4M200/X4M300, and the UART communication link
- WIFI module is based on ESP8285, which can establish transmission to a cloud server.
- LED is used to indicate WIFI status. When there is no network connection, the LED flashes in constant interval. When a connection is established, the LED is stands On. During data transmission, LED flashes when receiving and transmitting.

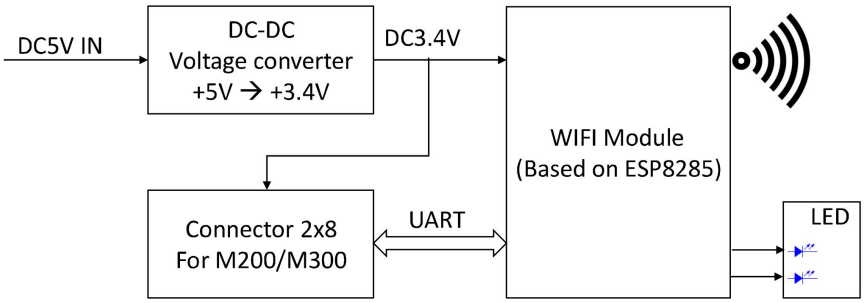

Compact and easy to use

Board dimensions are 50mm x 67.6mm x 21mm, when assembled with the X4M200 or X4M300. Special design considerations must be given to ensure signal integrity, especially with several RF antennas on board. Exceed Technology offers the product in standard encapsulation, custom encapsulations and PCB assembly. Mechanical drawings can be made available to support encapsulation designs.

Technical Specifications

- Compatible with X4M200, X4M300
- Frequency range：2.4G～2.5G(2400～2483.5M)
- Transmitting power: 802.11b: +20dBm

802.11g: +17dBm
802.11n: +14dBm

- receiving sensitivity: 802.11b: -91dBm
  802.11g: -75dBm
  802.11n: -72dBm
- Supports 80211 b/g/n/e/I;
- Supports Station、SoftAP、SoftAP+STA mode;
- Supports WI-FI Direct(P2P);
- Supports WPA/PA2 PSK and WPS;
- Seamless Roaming;
- Built-in HTTP Web Server, Supporting web configuration parameter;
- Supporting TCP Server,TCP Client,UDP Server,UDP Client and UDP Broadcast;
- Support AP enable, customize SSID/password, customize IP and network segments;
- Automatically scan peripheral hotspots, support STA enabling, DHCP, customize IP and network segments;
- Support for using serial port at command to set and view WIFI status;
- Remote Server address support DNS Domain name Auto-resolution;
- Antenna：PCB embedded antenna；
- UART : Default 115200 baud rate,8 data bits,1 stop bit,no parity. Parameters can be changed as needed
- Dimensions：50mm X 67.6 mm；
- Working Temperature ： -40° to 125°

Other Specifications

- Power supply: 5V DC
- Power current: 200mA (including X4M200/X4M300)

- PCB size: 50 x 67.6 mm
- Assembly size: 50 x 67.6 x 21 mm

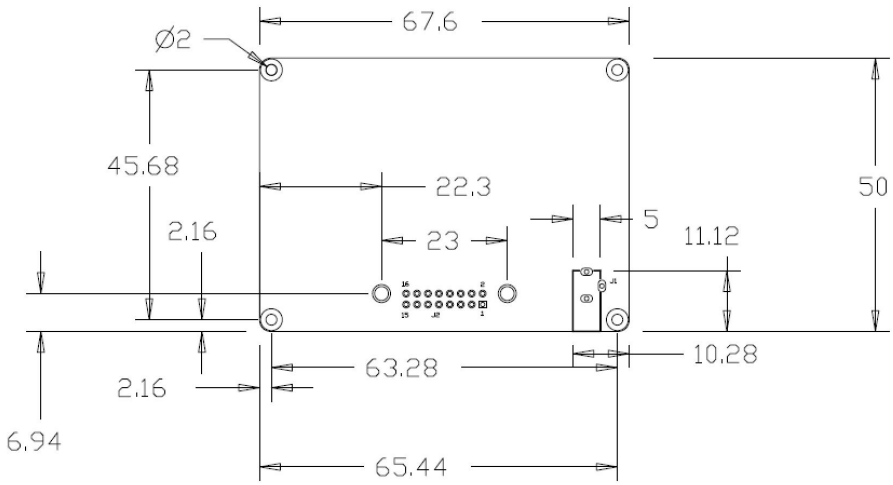

Availability and options

- Available from January 2018
- Standard encapsulation
  - Color ： White, Black
  - Dimension: 80 * 80 * 26 mm,
  - Material: ABS
- Custom encapsulation
  - Customized designs
- PCB Assembly
  - Design and manufacture your own encapsulation

Exceed Technology Co. Limited
www.exceed-tech.com
E: ask@exceed-tech.com, Tel: + 852 9738 7071, Whatsapp: +85297387071

AT Command Instruction Set:

Data Direction	Instruction(ASCII Character string)	Meaning
Query STA state		
MCU → WIFI	AT+STASTATUS	Query STA schema status
WIFI → MCU	STA:OK	STA connected
WIFI → MCU	STA:DOWN	STA disconnected
Get the IP and MAC of the STA mode		
MCU → WIFI	AT+STAINFO	Get the MAC and IP of WIFI
WIFI → MCU	Mac|IP Sample 5CCF7F116380|192.168.1.102	MAC address and IP address in STA Mode
Query the connection state in the TCP Client mode		
MCU→WIFI	AT+TCPCLIENT	Query join status in TCP Client mode, no sense in other modes
WIFI→MCU	TCP:OK	TCP Client connected
WIFI→MCU	TCP:OFF	TCP Client disconnected
Reset WIFI		
MCU → WIFI	AT+RST	Reset WIFI
WIFI → MCU	RST:OK	Response
Restoration of factory setting		
MCU → WIFI	AT+RESTORE	WIFI Restore and reboot
WIFI → MCU	RESTORE:OK	Response

Exceed WIFI module access and set up.

1. Please connect DC5V to the board ->System power up -> Green LED on WiFI board + LED on Xethru module flashing.
2. The module starts searching for WIFI networks. If this is new WiFi network, then User set up is required. Please note both AP and STATION modes are provided by the WiFi module.
3. Using a PC or mobile phone, search for (Exceed_Wifi_xxxxxx) and connect to it.
4. Enter **192.168.4.1** to access WiFi set up.

5. Once connected, select STATUS , check that WiFi Status is showing “connecting”.

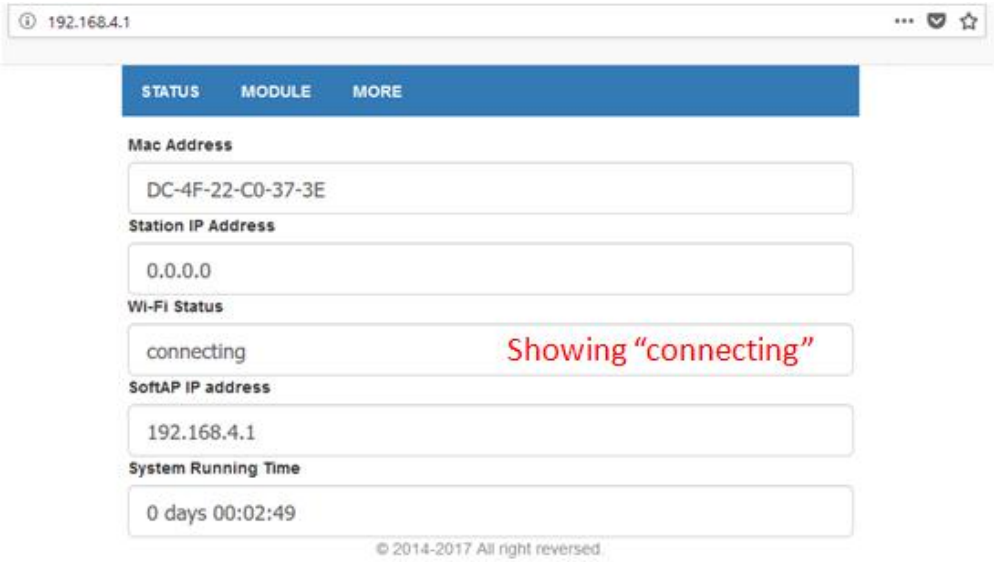

6. Select Module -> Serial
7. Confirm “Baudrate” is 115200
8. Save

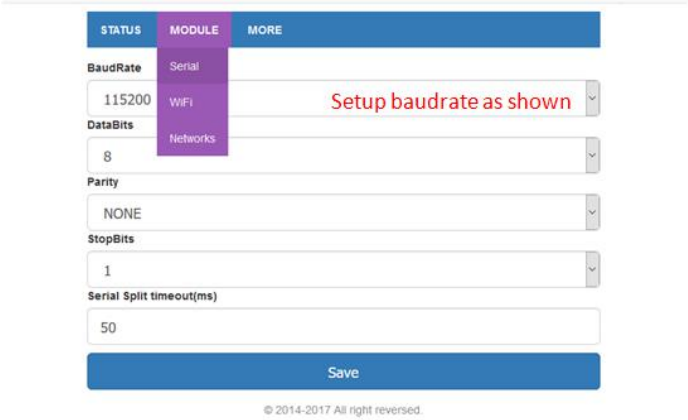

9. Select Module -> WiFi
10. Station Settings -> Enabled
11. Enter the SSID name you are connecting to or select from the drop down SSID list
12. Enter Password accordingly
13. Save

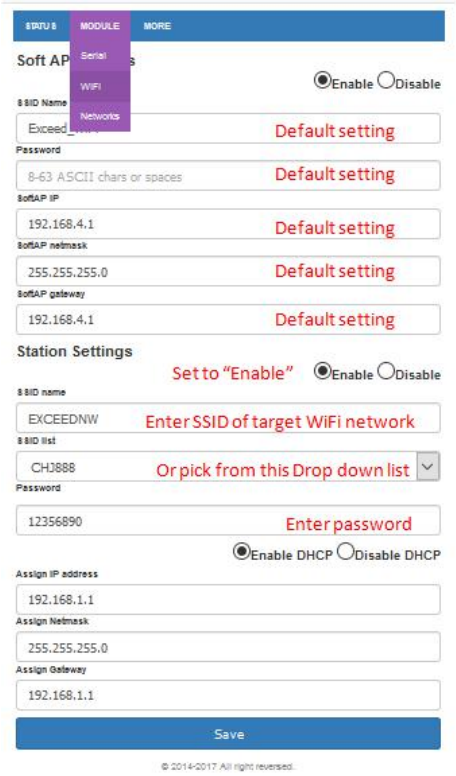

14. Select Module -> Network
15. Socket Type -> TCP Client （VitalWIFI supports TCP Server、TCP Client、UDP Server、UDP Client andUDP BroadCast. Depending on the network requirement, user may select any of the supported Socket Type and respective settings.），
    The following example uses TCP Client， ie: Socket Type ->TCP Client）

16. TCP Client -> set the respective IP address and local port of the server
17. Save

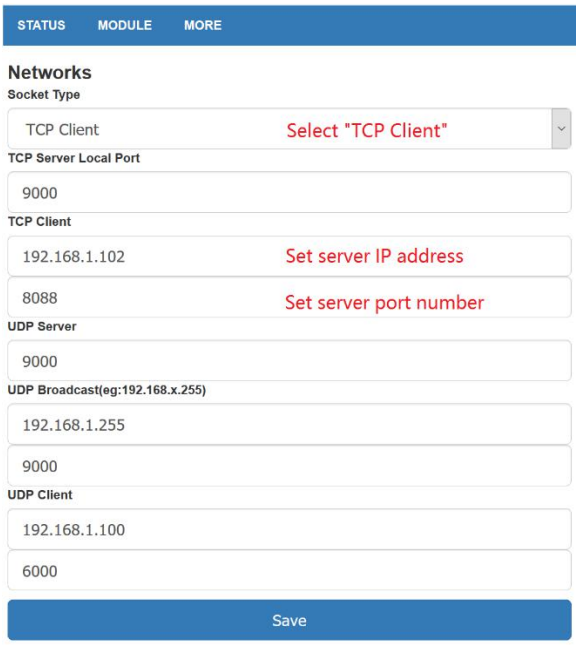

18. Select More -> Restart - this will start the module with the new settings.
19. Check for Restart Successful

20. Select STATUS , check that WiFi Status is showing “connected”.
21. Set Up Completed

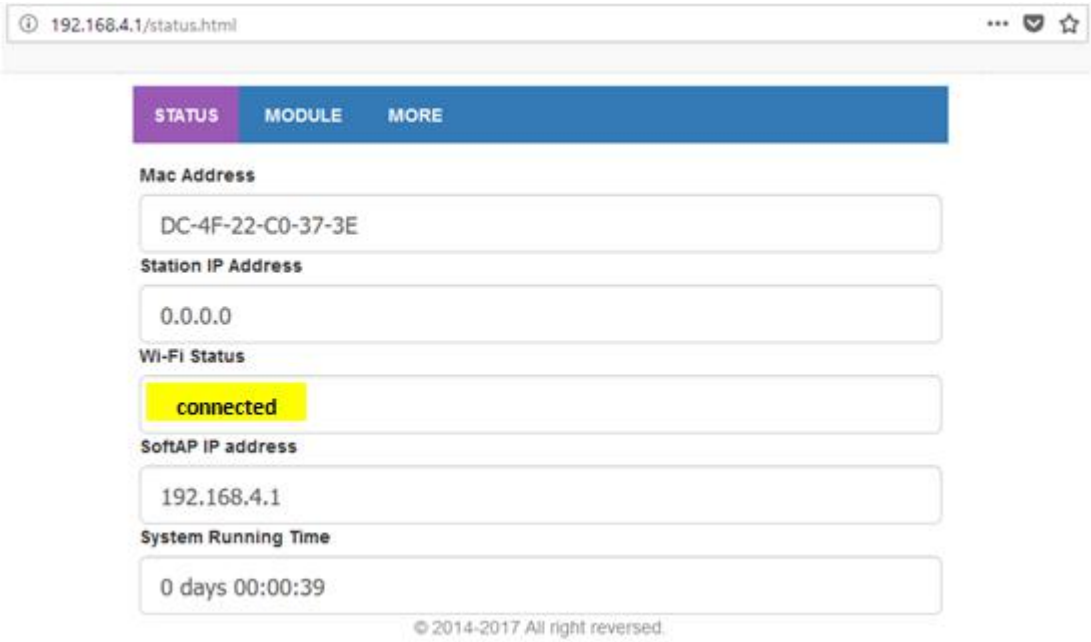

22. Activate TCPUDPbg (testing program) , select Server Mode and CreateServer. Set the Local IP address and LocalPort. Please note the settings here must be identical to those settings in step 18. Create TCP server.

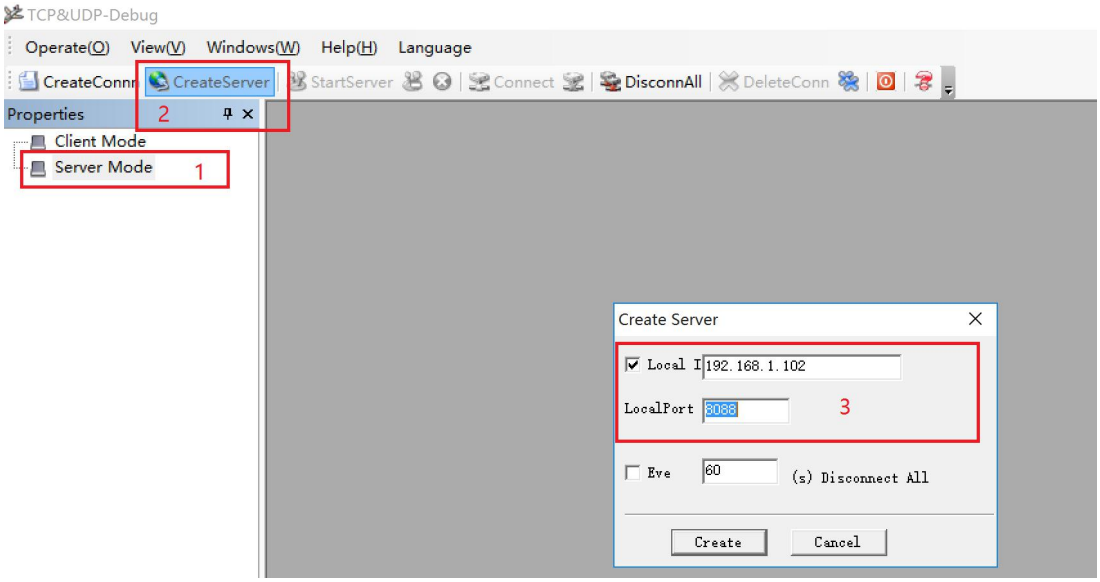

23. Click - StartServer， establish TCP connection.

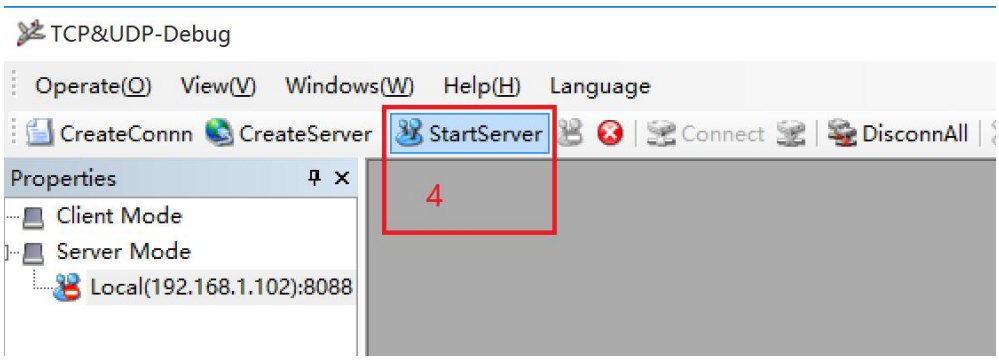

24. Click on ShowHex, to display the data in hex format. The content in the receiving window is the data received directly from the UART of X4M200.X4M300. ie transparent data transmission from VitalSCAN (TCP client) to TCP Serder.

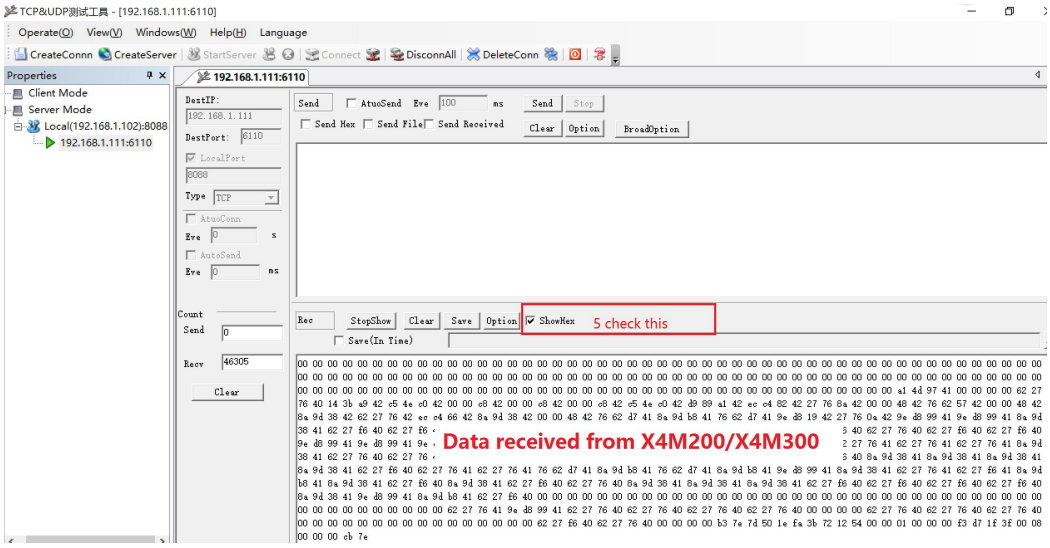

ATTENTION

This device complies with part 15 of the FCC Rules. Operation is subject to the condition that this device does not cause harmful interference (1) this device may not cause harmful interference, and (2) this device must accept any interference received, including interference that may cause undesired operation.

Changes or modifications not expressly approved by the party responsible for compliance could void the user's authority to operate the equipment.

NOTE: This equipment has been tested and found to comply with the limits for a Class B digital device, pursuant to Part 15 of the FCC Rules. These limits are designed to provide reasonable protection against harmful interference in a residential installation. This equipment generates, uses and can radiate radio frequency energy and, if not installed and used in accordance with the instructions, may cause harmful interference to radio communications. However, there is no guarantee that interference will not occur in a particular installation.

If this equipment does cause harmful interference to radio or television reception, which can be determined by turning the equipment off and on, the user is encouraged to try to correct the interference by one or more of the following measures:

- Reorient or relocate the receiving antenna.

- Increase the separation between the equipment and receiver.

- Connect the equipment into an outlet on a circuit different from that to which the receiver is connected.

- Consult the dealer or an experienced radio/TV technician for help.

To maintain compliance with FCC's RF Exposure guidelines, this equipment should be installed and operated with minimum distance between 20cm the radiator your body: Use only the supplied antenna.
FCC ID：2APQO-EX4C01