FCC CFR47 Part 15 Subpart C
ISED RSS-210
Certification Test Report

For the

Product	**: Digital Smart Door Lock Set**
Model	**: GKW-2000D**
FCC ID	**: 2APR8-GKW2000D**
IC	**: 24013-GKW2000D**
Applicant	**: Guardtec**
FCC Rule	**: CFR 47 Part 15 Subpart C**
ISED Rule	**: IC RSS-210 Issue 9**

We hereby certify that the above product has been tested by us with the listed rules and found in compliance with the regulation. The test data and results are issued on the test report no. **TR-W1806-004**

Signature

Choi, Yeong-min / Technical Manager

Date: 2018-06-12

Test Laboratory: ENG Co., Ltd.

It shall not be reproduced except in full, without the written approval of the ENG Co., Ltd. This document may be altered or revised by the ENG Co., Ltd. personnel only, and shall be noted in the revision section of the document. The test results in the report only apply to the tested sample.

FCC/ISED CERTIFICATION TEST REPORT

Project Number	**: EA1804C-091**
Test Report Number	**: TR-W1806-004**
Type of Equipment	**: Digital Smart Door Lock Set**
Model Name	**: GKW-2000D**
FCC ID	**: 2APR8-GKW2000D**
ISED Cert. Number	**: 24013-GKW2000D**
Multiple Model Name	**: N/A**
Applicant	**: Guardtec**
Address	**: #1203-1204, Hansin IT Tower, 272 Digital-ro, Guro-gu, Seoul, Korea 08389**
Manufacturer	**: Guardtec**
Address	**: #1203-1204, Hansin IT Tower, 272 Digital-ro, Guro-gu, Seoul, Korea 08389**
Regulation	**: FCC Part 15 Subpart C Section 15.247, ISED RSS-210 Issue9**
Total page of Report	**: 17 Pages**
Date of Receipt	**: 2018-04-26**
Date of Issue	**: 2018-06-12**
Test Result	**: PASS**

This test report only contains the result of a single test of the sample supplied for the examination.
It is not a generally valid assessment of the features of the respective products of the mass-production.

Prepared by Song, In-young / Senior Engineer _____ 2018-06-12
Signature Date

Reviewed by Choi, Yeong-min / Technical Manager _____ 2018-06-12
Signature Date

ENG Co., Ltd. 135-60 Gyeongchung-daero, Gonjiam-eup, Gwangju-si, Gyeonggi-do, Korea 464-942 Report Form_01 (Rev.0)
TEL: +82-31-727-8300 FAX: +82-31-746-0800 http://www.the-eng.co.kr

CONTENTS

Page

1. TEST SUMMARY 4

2. EUT (EQUIPMENT UNDER TEST) INFORMATION 6

3. TEST CONDITION 6

4. ANTENNA REQUIREMENT 8

4.1 CONCLUSION 8

5. TEST RESULT 9

5.1 RADIATED EMISSIONS 9

5.2 20 DB BANDWIDTH 14

5.3 99% POWER BANDWIDTH 15

5.4 FREQUENCY TOLERANCE OF CARRIER SIGNAL 16

APPENDIX I – TEST INSTRUMENTATION 17

ENG Co., Ltd. 135-60 Gyeongchung-daero, Gonjiam-eup, Gwangju-si, Gyeonggi-do, Korea 464-942 Report Form_01 (Rev.0)

TEL: +82-31-727-8300 FAX: +82-31-746-0800 http://www.the-eng.co.kr

Release Control Record

Issue Report No.	Issued Date	Details/Revisions
TR-W1806-004	2018-06-12	Initial Release
-	-	-

ENG Co., Ltd. 135-60 Gyeongchung-daero, Gonjiam-eup, Gwangju-si, Gyeonggi-do, Korea 464-942

TEL: +82-31-727-8300 FAX: +82-31-746-0800 http://www.the-eng.co.kr

1. TEST SUMMARY

1.1 Regulations and results

The sample submitted for evaluation (Referred to below as the EUT) has been tested in accordance with the following regulations or standards.

FCC Reference Section	ISED Reference Section	Description	P	F	N.T.	Note
15.205, 15.209(a) & 15.225(d)	RSS-210 B.6	Radiated Spurious Emissions	P			
15.207	RSS GEN 8.8	AC Power-line Conducted Emissions			N.T.	Note 1
15.225(a)	RSS-210 B.6	Field strength within the band 13.553-13.567 MHz	P			
15.225(b) & 15.225(c)	RSS-210 B.6	Field strength within the band 13.410-13.553 MHz and 13.567-13.710 MHz 13.110-13.410 MHz and 13.710-14.010 MHz	P			
15.225(e)	RSS-210 B.6	Frequency Tolerance of Carrier Signal	P			
15.215	RSS GEN 6.6	20 dB Bandwidth, 99 % Bandwidth	P			
Remark: P means Passed F means Failed N.T. means Not Tested						

Note1. The EUT is operated by battery only. (used manganese dry cell as type AA)

1.2 Purpose of the test

To determine whether the equipment under test fulfills the requirements of the regulation stated in FCC Part 15 Subpart C Section 15.225, RGG-Gen and RSS-210

1.3 Test Methodology

The tests mentioned in clause 1.1 in this test report were performed according to FCC CFR 47 Part 2, CFR 47 Part 15, ANSI C63.10-2013, and RSS-Gen.

1.3 Additions, deviations, exclusions from standards

No additions, deviations or exclusions have been made from standard.

1.4 Test Facility

The measurement facilities are located at 135-60 Gyeongchung-daero, Gonjiam-eup, Gwangju-si, Gyeonggi-do 12813, Korea. Description details of test facilities were submitted to the FCC and IC, designated by the RRA (Radio Research Agency), and accredited by Korea and accredited by KOLAS (Korea Laboratory Accreditation Scheme) in Korea according to the requirement of ISO 17025.

Agency Name	Registration No.	Mark
FCC	KR0160	
ISED(Canada)	IC 12721A	
RRA	KR0160	
Korean Agency for Technology and Standards	KT733	

2. EUT (Equipment Under Test) INFORMATION

2.1 General Description

The Guardtec, Model GKW-2000D (referred to as the EUT in this report) is a Digital Smart Door Lock Set. The EUT is a device for transferring RFID (13.56 MHz) signal to an RFID TAG through wireless communication.

The product specification described herein was obtained from product data sheet or user's manual.

Operating Frequency	13.56 MHz
KIND OF CLASS	DXT- Part 15 Low Power Transceiver, Rx Verified
Modulation Types	ASK
Max. useable Card (NFC)	20 ea
Generated or used Freq. in EUT	32.768 kHz, 13.56 MHz, 16 MHz, 32 MHz
Type of Antenna	■ Integrated Type ☐ Dedicated Type
	PCB Pattern Antenna (44 x 24 mm, 5 turns)
Operating Temperature	-20 °C ~ + 55 °C
Normal Test Voltage	DC 6.0 V
Electrical Rating	DC 6.0 V
External Port(s)	N/A
Test SW Version	N/A
Software Version	1.0
Hardware Version	1.0

2.2 Additional Model

None

3. TEST CONDITION

3.1 Equipment Used During Test

The following peripheral devices and/or interface cables were connected during the measurement:

Description	Model No.	Serial No.	Manufacturer.
Digital Smart Door Lock Set (EUT)	GKW-2000D	N/A	Guardtec
RFID Tag Card	-	-	-

3.2 Mode of operation during the test

The modulation test setup is press the password registration button in EUT and then insert AA battery. And then Contact the EUT with and the RFID Tag Card. The used modulation type for the testing is ASK (13.56 MHz)

The unmodulation test setup is just insert AA battery in EUT.

3.3 Test Setup Drawing

(Radiated Test below 30 MHz)

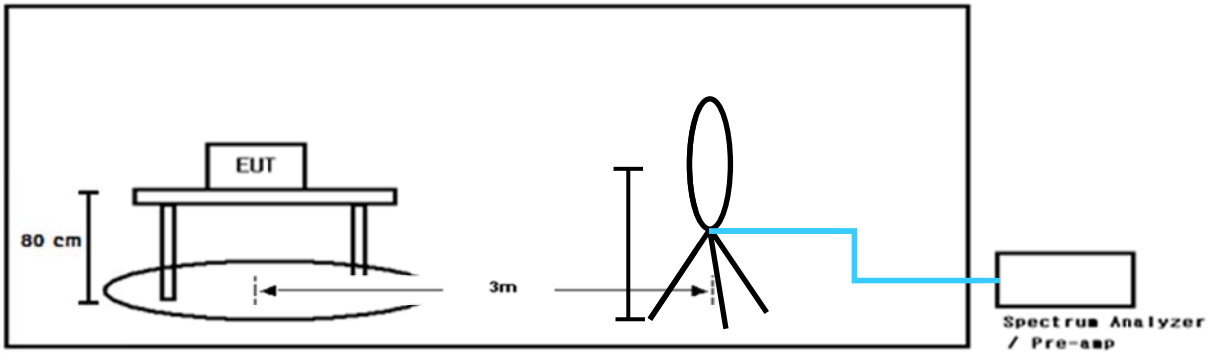

(Radiated Test below 1 GHz)

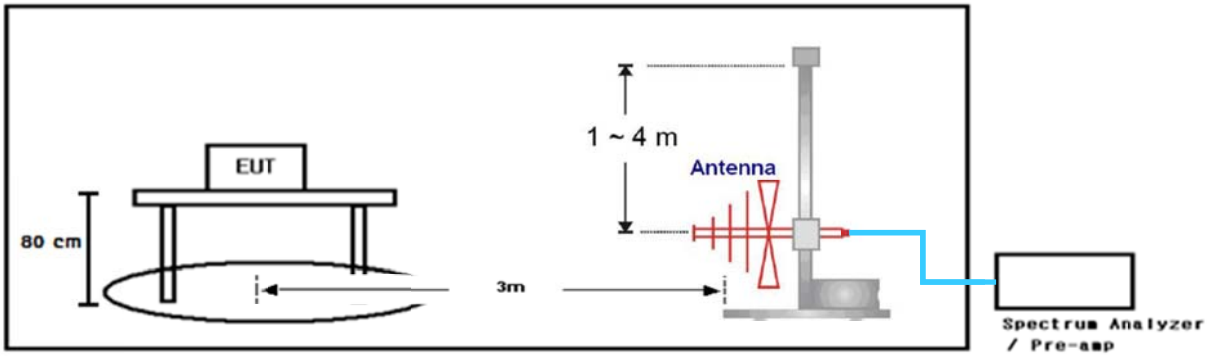

(Frequency Tolerance of Carrier Signal Test)

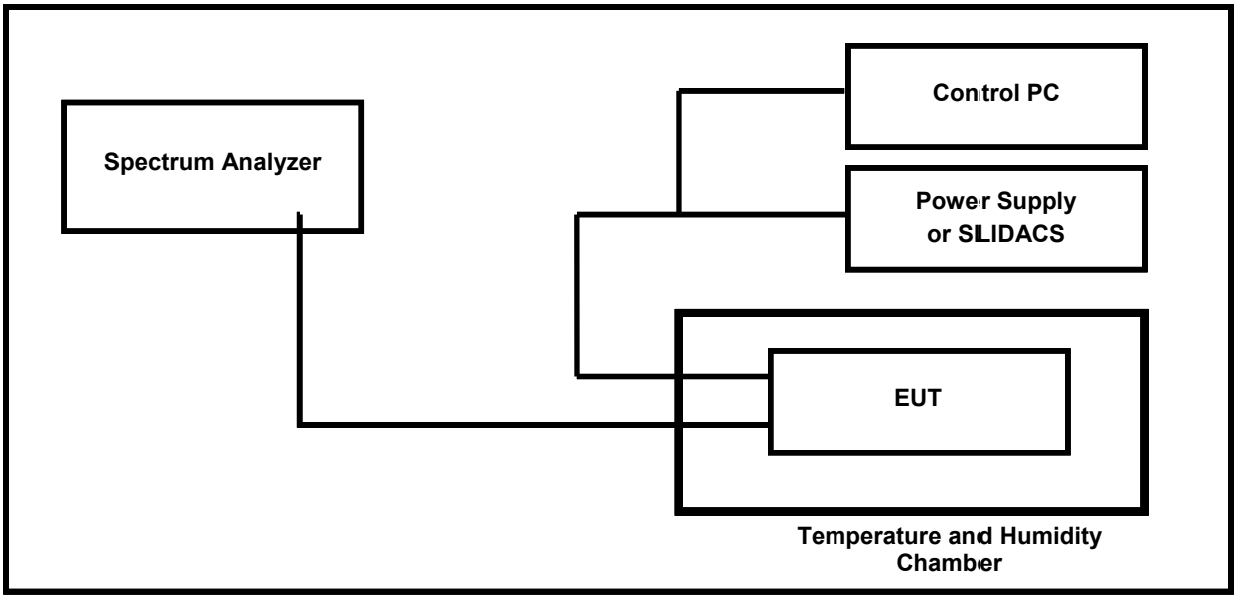

3.4 EUT Modifications

- No EMC Relevant Modifications were performed by this test laboratory.

4. ANTENNA REQUIREMENT

According to FCC CFR 47 Part 15 section 15.203, an intentional radiator shall be designed to ensure that no antenna other than that furnished by the responsible party shall be used with the device. The use of a permanently attached antenna or of an antenna that uses a unique coupling to the intentional radiator shall be considered sufficient to comply with the provision of this section. The manufacturer may design the unit so that the user can replace a broken antenna, but the use of a standard antenna jack or electrical connector is prohibited. This requirement does not apply to carrier current devices or to devices operated under the provisions of Sections 15.211, 15.213, 15.217, 15.219, or 15.221. Further, this requirement does not apply to intentional radiators that must be professionally installed, such as perimeter protection systems and some field disturbance sensors, or to other intentional radiators which, in accordance with Section 15.31 (d), must be measured at the installation site. However, the installer shall be responsible for ensuring that the proper antenna is employed so that the limits in this Part are not exceeded.

4.1 Conclusion

The EUT has an integral PCB loop antenna, so there is no consideration of replacement by the user.

ENG Co., Ltd. 135-60 Gyeongchung-daero, Gonjiam-eup, Gwangju-si, Gyeonggi-do, Korea 464-942

TEL: +82-31-727-8300 FAX: +82-31-746-0800 http://www.the-eng.co.kr

5. TEST RESULT

5.1 Radiated emissions

5.1.1 Regulation

Acc. To section 15.225, 15.209 and RSS-210 Annex B.6, following table shall be applied.

Frequency (MHz)	Field strength limit (μV/m) @ 30 m	Field strength limit (dBμV/m) @ 30 m	Field strength limit (dBμV/m) @ 3 m
13.110 – 13.410	106	40.5	80.5
13.410 – 13.553	334	50.5	90.5
13.553 – 13.567	15,848	84.0	124.0
13.567 – 13.710	334	50.5	90.5
13.710 – 14.010	106	40.5	80.5

Frequency (MHz)	Field strength limit (μV/m)	Field strength limit (dBμV/m)	Measurement Distance (m)
0.009 – 0.490	2400/F (kHz) = 266.7 – 4.9	48.5 – 13.8	300
0.490 – 1.705	24000/F (kHz) = 49.0 – 14.1	33.8 - 23.0	30
1.705 – 30.0	30	29.5	30
30 – 88	100	40.0	3
88 - 216	150	43.5	3
216 - 960	200	46.0	3
Above 960	500	54.0	3

Note: The emission limits shown in the above table are based on measurement instrumentation employing a CISPR quasi-peak detector. For the frequency bands 9 – 90 kHz, 110 – 490 kHz and above 1000 MHz, the radiated emission limits are based on measurements employing an average detector.

5.1.2 Method of Measurement

The preliminary radiated emission test was performed using the procedure in ANSI C63.10 2013 to determine the worse operating conditions. The radiated emissions measurements were performed on the 10 m Semi Anechoic Chamber

Radiated Emissions Test, 9 kHz to 30 MHz (Magnetic Field Test)

For frequencies from 150 kHz to 30 MHz measurements were made of the magnetic H field. The EUT was placed on the top of the 0.8-meter height, 1 × 1.5 meter non-metallic table. The measuring antenna is an electrically screened loop antenna. Emissions from the EUT are maximized by adjusting the orientation of the Loop antenna and rotating the EUT on the turntable. Manipulating the system cables also maximizes EUT emissions if applicable. The test-receiver system was set up to average, peak, and quasi-peak detector function with specified bandwidth.

Radiated Emissions Test, below 1 000 MHz

The frequency spectrum from 30 MHz to 1 000 MHz was scanned and maximum emission levels maximized at each frequency recorded. The system rotated 360°, and the antenna was varied in the height between 1.0 m and 4.0 m in order to determine the maximum emission levels. This procedure was performed for both horizontal and vertical polarization of the receiving antenna. The EUT is situated in three orthogonal planes(if appropriate)

5.1.3 Test Site Requirement for KDB 937606

Acc. to KDB 937606, Semi Anechoic Chamber (SAC) shall be verified test results below 30 MHz with Open Area Test Site (OATS), so we compared test results between the measurements from our SAC and an OATS and found test results almost same, so we declare test result for below 30 MHz from our SAC is valid and met the requirement acc. to KDB 937606.

5.1.4 Measurement Uncertainty

Measurement uncertainties were not taken into account and following uncertainty levels have been estimated for tests performed on the apparatus. The measurement uncertainties are given with at least 95 % confidence.

Frequency Range	Uncertainty	Frequency Range	Uncertainty
9 kHz ~ 30 MHz	± 2.1 dB	30 MHz ~ 1 GHz	± 4.7 dB

5.1.5 Sample Calculated Example

At 80 MHz Limit = 40.0 dBuV/m

Result =Receiver reading value + Antenna Factor + Cable Loss – Pre-amplifier gain = 30 dBuV/m

Margin = Limit – Result = 40 – 30 = 10 so the EUT has 10.0 dB margin at 80 MHz

5.1.6 Test Data

Date of Test	2018-05-23	Temperature	(23.2 ± 2.7) °C
		Relative humidity	(46.4 ± 5.9) % R.H.
Measurement Frequency Range		9 kHz ~ 1 GHz	
Test Result	***PASS***	Tested By	Do-heon Kim

Frequency range	Detector Mode	Resolution BW	Video BW	Video Filtering	Measurement distance
Below 30 MHz	Peak or Q.P.	9 kHz	30 kHz	-	3 m
30 MHz ~ 1 000 MHz	Peak or Q.P.	100 kHz	300 kHz	-	3 m

5.1.6.1 Test Data below 30 MHz

Graphical Test Data – Below 30 MHz

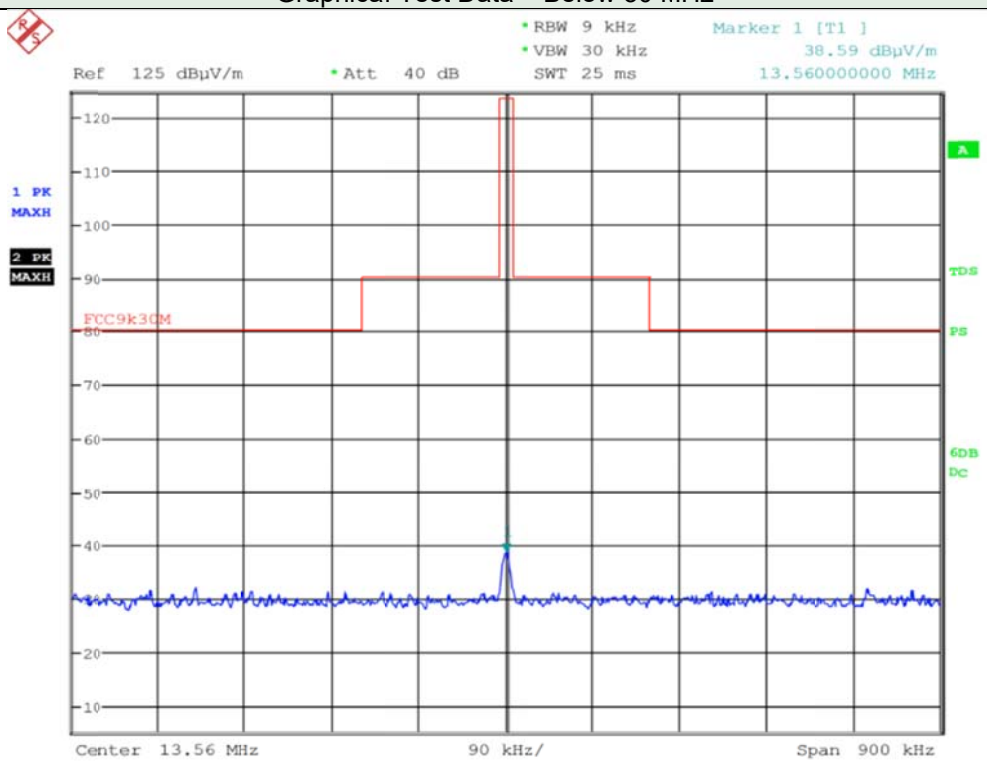

Tabulated Test Data under 15.225(a), (b)&(c)

Frequency (MHz)	Detector Mode	Pol.	Result (dBuV/m)	Limit (dBuV/m)	Margin (dB)	Height (cm)	Azimuth (Degree)
13.560	Peak	H	38.59	124.00	85.41	0	354

Graphical Test Data – Below 30 MHz

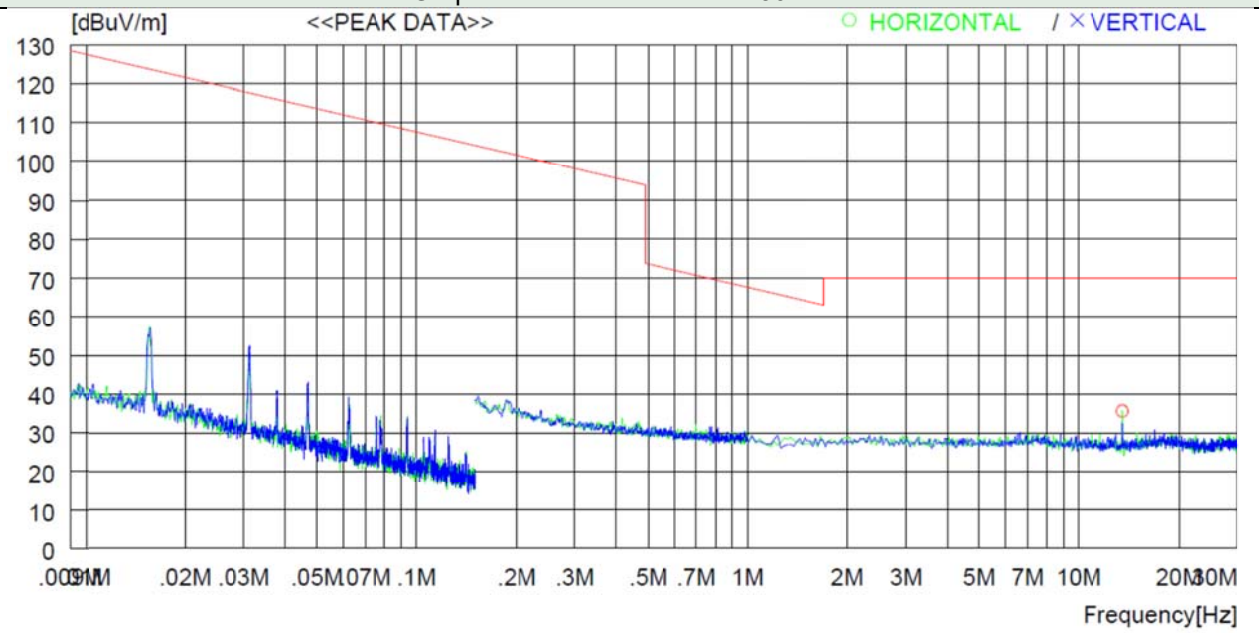

Tabulated Test Data under 15.225(d), 15.209

Frequency (MHz)	Receiver Reading (dBuV)	Detector Mode	Pol.	Ant. Factor (dB/m)	Corr. Factor(dB)	Result (dBuV/m)	Limit (dBuV/m)	Margin (dB)	Height (cm)	Azimuth (Degree)
* Spurious emissions that 20 dB below the limits didn't be recorded										

Note: Result(dBuV/m)= Receiver Reading(dBuV) + Antenna Factor(dB/m) - Corr. Factor(dB)

Corr. Factor(dB)= Pre-amplifier(dB) – Cable loss(dB)

Margin(dB)= Limit(dBuV/m) – Result(dBuV/m)

5.1.6.2 Test Data from 30 MHz to 1 GHz

Graphical Test Data – Below 1 000 MHz

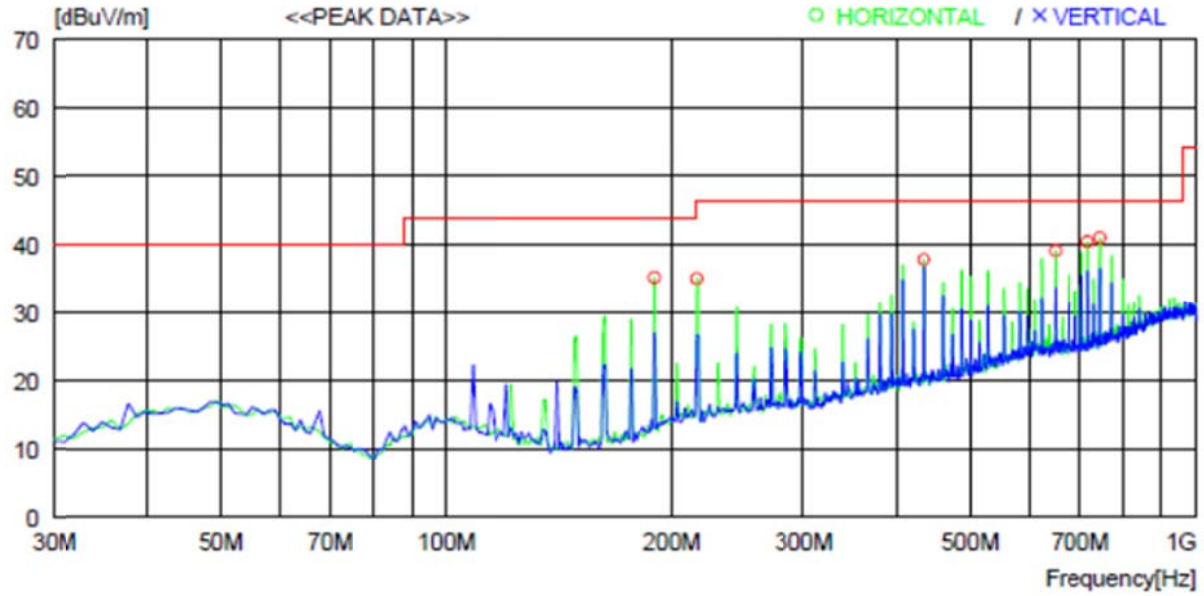

Tabulated Test Data under 15.205(a), 15.209

Frequency (MHz)	Receiver Reading (dBuV)	Detector Mode	Pol.	Ant. Factor (dB/m)	Corr. Factor(dB)	Result (dBuV/m)	Limit (dBuV/m)	Margin (dB)	Height (cm)	Azimuth (Degree)
190.050	48.7	Peak	H	10.3	23.9	35.1	43.5	8.4	100	292
216.240	46.6	Peak	H	11.9	23.6	34.9	46.0	11.1	100	292
433.521	43.6	Peak	H	16.5	22.4	37.7	46.0	8.3	200	86
650.796	40.7	Peak	H	19.8	21.5	39.0	46.0	7.0	100	33
718.694	41.3	Peak	H	20.2	21.2	40.3	46.0	5.7	100	359
745.854	41.4	Peak	H	20.6	21.1	40.9	46.0	5.1	100	187

Note: "H" means Horizontal polarity, "V" means Vertical polarity

Result(dBuV/m)= Receiver Reading(dBuV) + Antenna Factor(dB/m) - Corr. Factor(dB)

Corr. Factor(dB)= Pre-amplifier(dB) – Cable loss(dB)

Margin(dB)= Limit(dBuV/m) – Result(dBuV/m)

5.2 20 dB bandwidth

5.2.1 Method of Measurement

The antenna output of the EUT was connected to the spectrum analyzer. The resolution is set to 300 Hz, and peak detection was used. The 20 dB bandwidth is defined as the total spectrum over which the power is higher than the peak power minus 20 dB.

5.2.2 Test Data

Date of Test	2018-05-25	Temperature	(24.0 ± 1.0) °C
		Relative humidity	(48.0 ± 3.0) % R.H.
Test Result	***PASS***	Tested by	Do-heon Kim

Operating Frequency (MHz)	Measured Value (MHz)	Limit
13.560	13.522	F_L > 13.110 MHz
	13.598	F_H < 14.010 MHz

20 dB bandwidth measurement plot

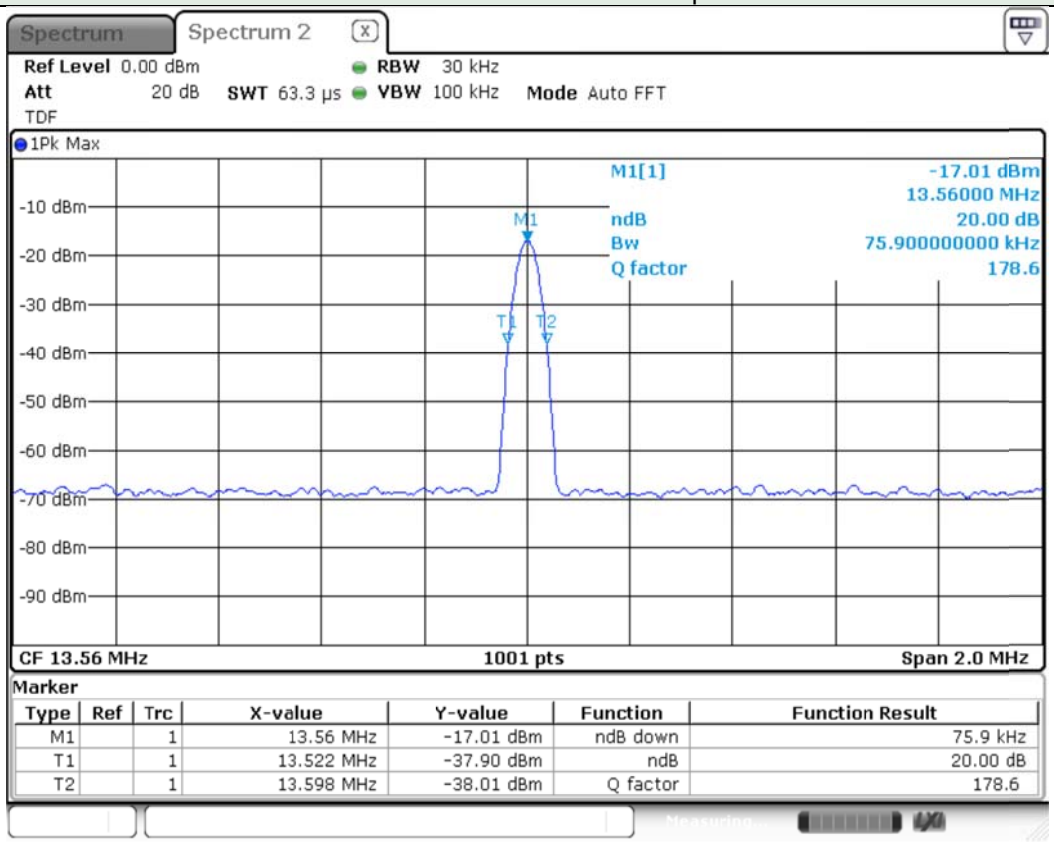

Note: F_L : Lowest frequency at 20 dB bandwidth

F_H : Highest frequency at 20 dB bandwidth

ENG Co., Ltd. 135-60 Gyeongchung-daero, Gonjiam-eup, Gwangju-si, Gyeonggi-do, Korea 464-942 Report Form_01 (Rev.0)
TEL: +82-31-727-8300 FAX: +82-31-746-0800 http://www.the-eng.co.kr

5.3 99% Power bandwidth

5.3.1 Method of Measurement

When an occupied bandwidth value is not specified in the applicable RSS, the transmitted signal bandwidth to be reported is to be its 99% emission bandwidth, as calculated or measured. The resolution bandwidth shall be set to as close to 1% of the selected span as is possible without being below 1%. The video bandwidth shall be set to 3 times the resolution bandwidth.

5.3.2 Test Data

Date of Test	2018-05-25	Temperature	(24.0 ± 1.0) °C
		Relative humidity	(48.0 ± 3.0) % R.H.
Test Result	***PASS***	Tested by	Do-heon Kim

Operating Frequency (MHz)	Measured Value (kHz)	Limit (kHz)
13.560 0	63.94	-

99% bandwidth measurement plot

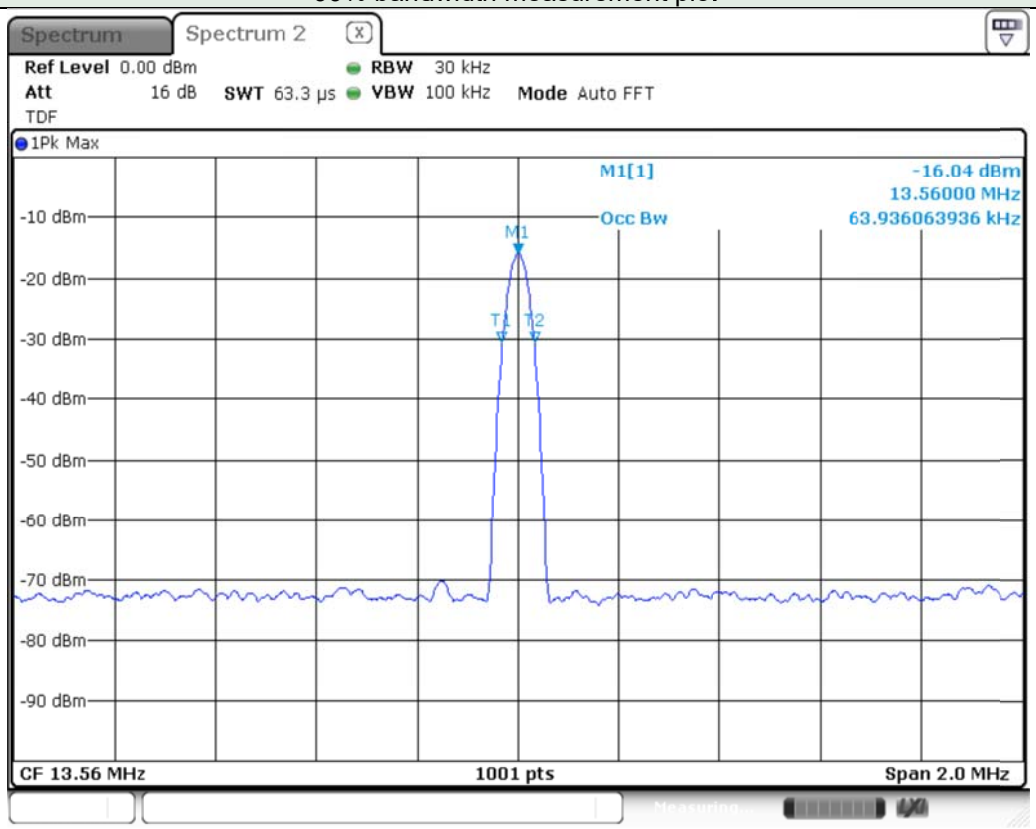

ENG Co., Ltd. 135-60 Gyeongchung-daero, Gonjiam-eup, Gwangju-si, Gyeonggi-do, Korea 464-942

TEL: +82-31-727-8300 FAX: +82-31-746-0800 http://www.the-eng.co.kr

5.4 Frequency tolerance of carrier signal

5.3.1 Regulation

FCC 47CFR15-15.225(e) and RSS-210 Annex B.6

The frequency tolerance of the carrier signal shall be maintained within +/- 0.01% of the operating frequency over a temperature variation of –20 degrees to +50 degrees C at normal supply voltage, and for a variation in the primary supply voltage from 85% to 115% of the rated supply voltage at a temperature of 20 degrees C. For battery-operated equipment, the equipment tests shall be performed using a new battery.

5.3.2 Method of Measurement

The EUT output was connected to the spectrum analyzer through an attenuator. Turn EUT off and set chamber temperature to -20 °C and then allow sufficient time (approximately 20 to 30 minutes after chamber reach the assigned temperature) for EUT to stabilize. Turn on EUT and measured EUT operating frequency and turn off the EUT after the measurement. The temperature was raised 10 °C step from -20 °C to +50 °C. Repeat above method for frequency measurement every 10 °C step and then record all measured frequencies on each temperature step.

An external DC power supply was connected to the input of the EUT. The voltage of EUT set to 115 % of the nominal value and then was reduced to 85 % of nominal voltage. The output frequency was recorded at each step.

5.3.3 Test Data

Date of Test	2018-05-25 ~ 2018-05-28	Temperature	(24.0 ± 1.0) °C
		Relative humidity	(48.0 ± 3.0) % R.H.
Test Result	***PASS***	Tested by	Do-heon Kim

Reference Frequency: 13.560 000 MHz, LIMIT: within ±1 356 Hz								
Environment Temperature (°C)	Carrier Frequency Measured with Time Elapsed							
	Start Up		2 minutes		5 minutes		10 minutes	
	(MHz)	Err (Hz)	(MHz)	Err (Hz)	(MHz)	Err (Hz)	(MHz)	Err (Hz)
+50	13.560 044	+44	13.560 046	+46	13.560 045	+45	13.560 045	+45
+40	13.560 066	+66	13.560 067	+67	13.560 067	+67	13.560 067	+67
+30	13.560 070	+70	13.560 069	+69	13.560 068	+68	13.560 068	+68
+20	13.560 058	+58	13.560 055	+55	13.560 055	+55	13.560 054	+54
+10	13.560 038	38	13.560 029	+29	13.560 020	+20	13.560 020	+20
0	13.559 999	-1	13.559 990	-10	13.559 979	-21	13.559 978	-22
-10	13.559 944	-56	13.559 938	-62	13.559 935	-65	13.559 935	-65
-20	13.559 937	-63	13.559 918	-82	13.559 912	-88	13.559 912	-88

Appendix I – Test Instrumentation

Description	Model No.	Serial No.	Manufacturer.	Due for Cal Date
Signal & Spectrum Analyzer	FSV 13	101243	Rohde & Schwarz	2019-01-18
Attenuator	10dB	ENG-2	Rohde & Schwarz	2019-01-18
Temperature & Humidity Chamber	SH-241	92012087	Espec	2019-01-19
Test Receiver	ESU 26	100303	Rohde & Schwarz	2019-01-18
Loop Antenna	HFH2-Z2	100341	Rohde & Schwarz	2019-04-21
TRILOG Broadband Antenna	VULB9163	9163.799	Schwarzbeck	2019-09-14
Notch Filter	BRM50702	G318	MICRO-TRONICS	2018-11-08
Attenuator	6dB	272.4110.50	Rohde & Schwarz	2019-01-18
Pre-Amplifier	310N	344015	Sonoma Instrument	2019-01-18
Turn Table	DT3000-3t	1310814	INNCO SYSTEM	N/A
Antenna Master	MA4000-EP	4600814	INNCO SYSTEM	N/A
Antenna Master	MA4000-XP-ET	-	INNCO SYSTEM	N/A
Camera Controller	HDCon4102	6531445048	PONTIS	N/A
CO3000 Controller	Co3000-4Port	CO3000/806/ 34130814/L	INNCO SYSTEM	N/A
CO3000 Controller	Co3000-4Port	CO3000/807/ 34130814/L	INNCO SYSTEM	N/A

The measuring equipment utilized to perform the tests documented in this test report has been calibrated in accordance with manufacturer's recommendations, and is traceable to recognized national standards.