3+

BOTZEES RC!

POLICE CAR

Instruction Manual

62101

pai TECHNOLOGY

List of parts

Please clean the product with a clean soft cloth.

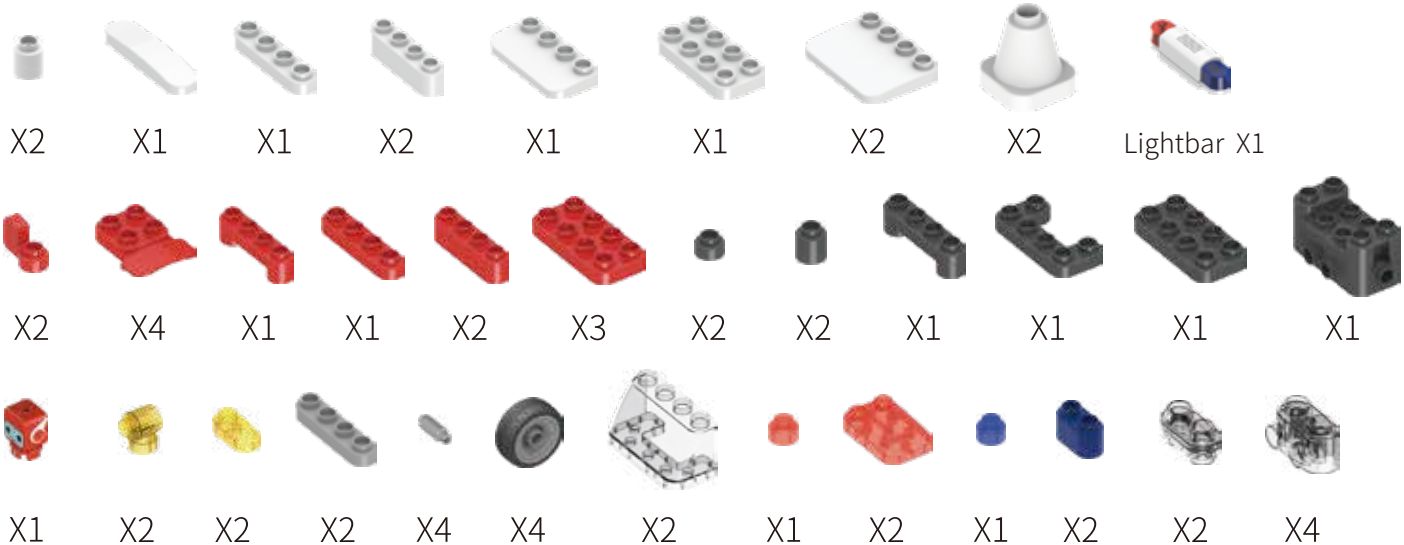

Remote control X1

Main control block X1

Sticker X1

0-3

⚠ WARNING:
CHOKING HAZARD—Small parts.
Not for children under 3 yrs.

How to Play

1. Set-up

Search For “Botzees Junior” and download the Botzees Junior app.

Download on the App Store

ANDROID APP ON Google play

2. Add a set

When prompted, scan **This QR code** to unlock the **Botzees RC! Police Car** features.

3. Unlock more combinations

Click the main image to try out more build combinations.

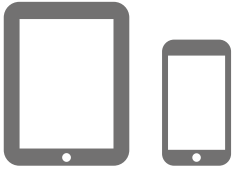

Compatibility:

Android 7+
iOS 11+
Please go to www.pai.technology to check the complete device compatibility list.

1

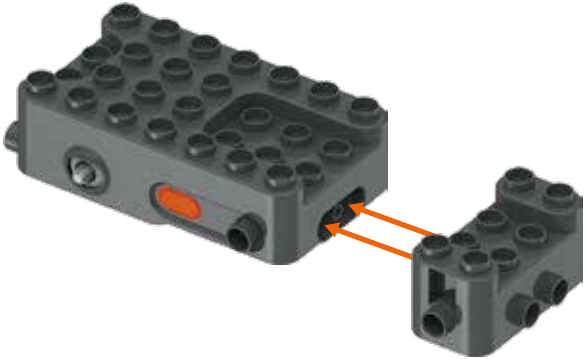

2

3

X1

4

X4

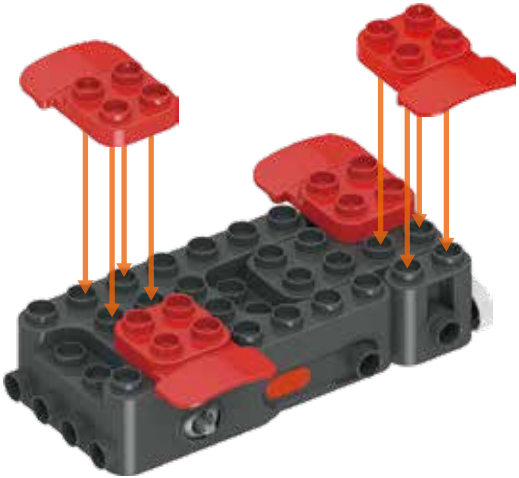

5

X2

6

X1

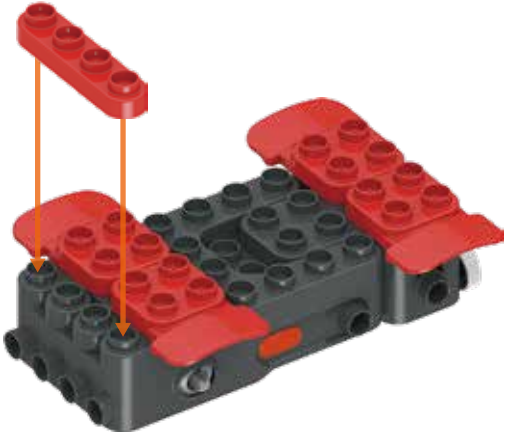

7

X2

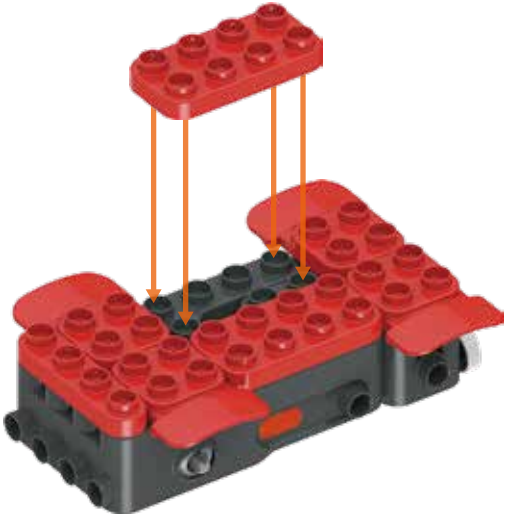

8

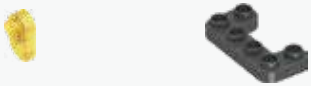

X2 X1

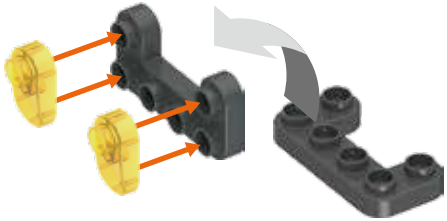

9

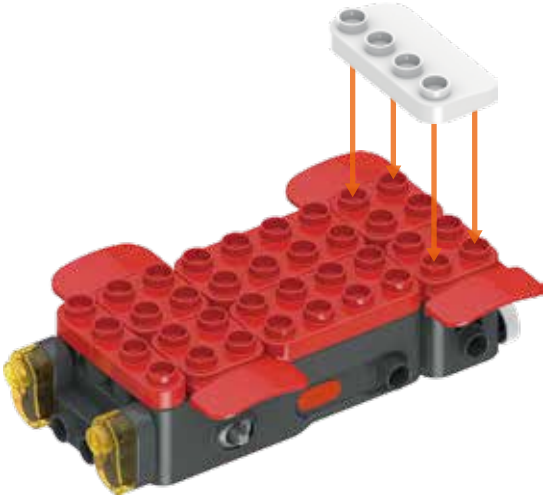

10

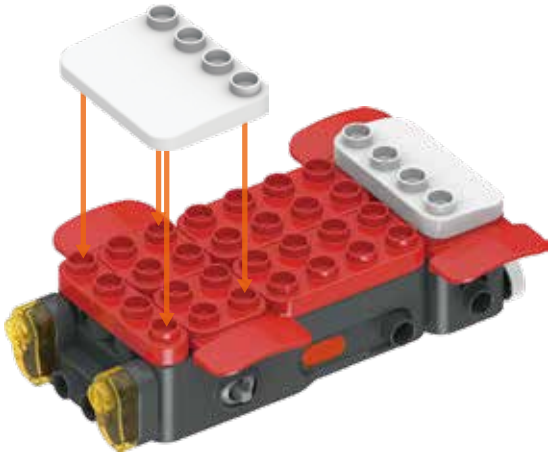

11

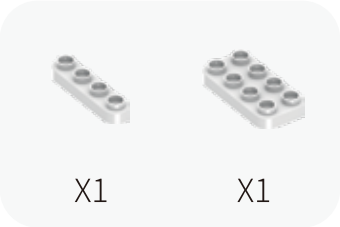

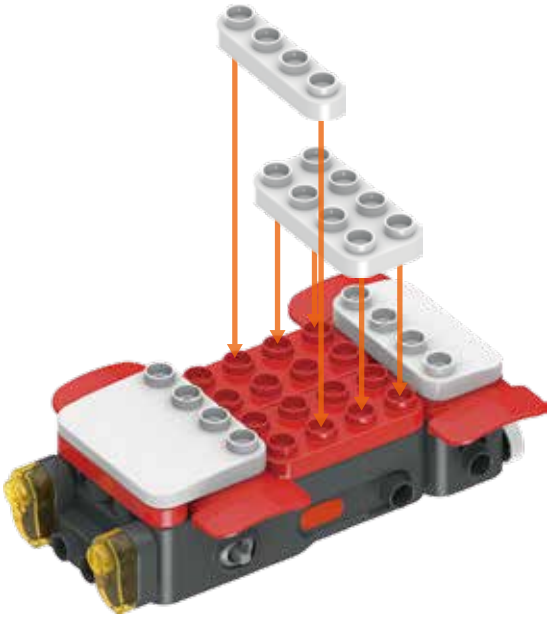

12

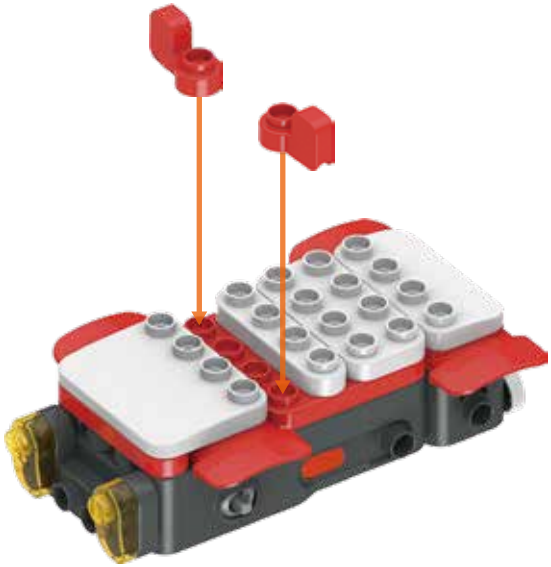

13

X2

14

X1

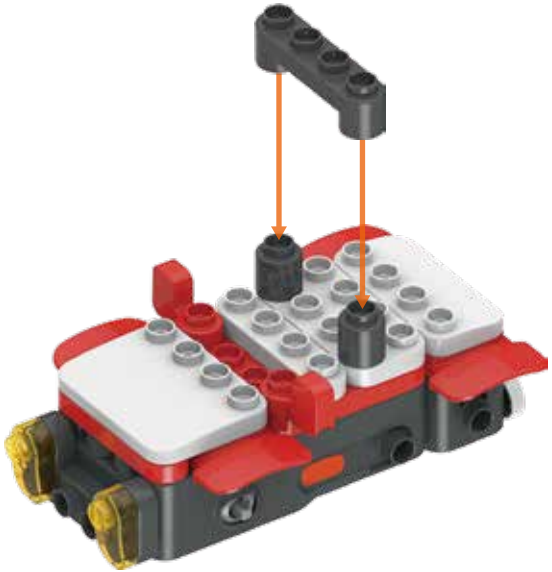

15

X1

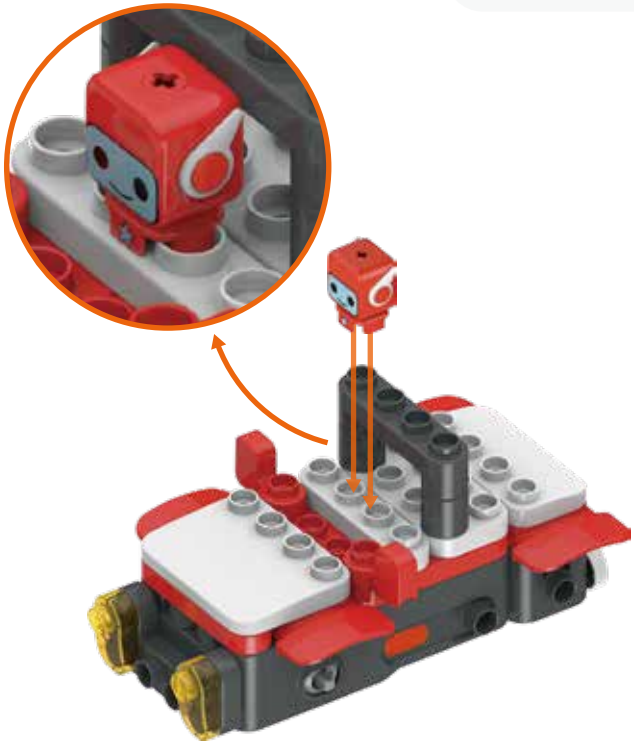

16

X2

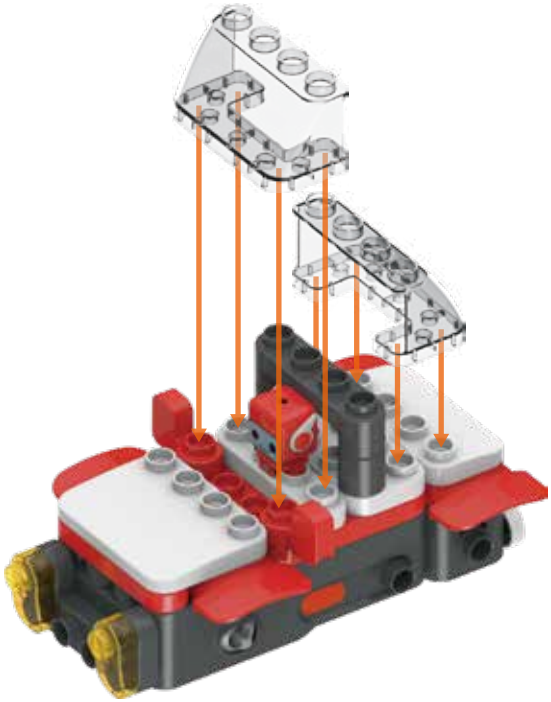

17

X1

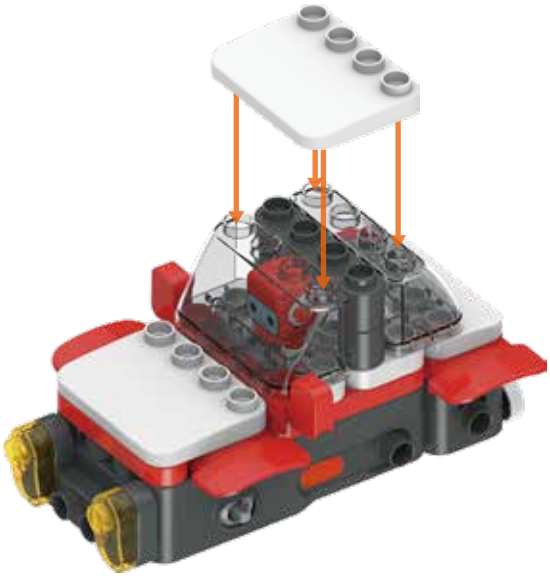

18

X1

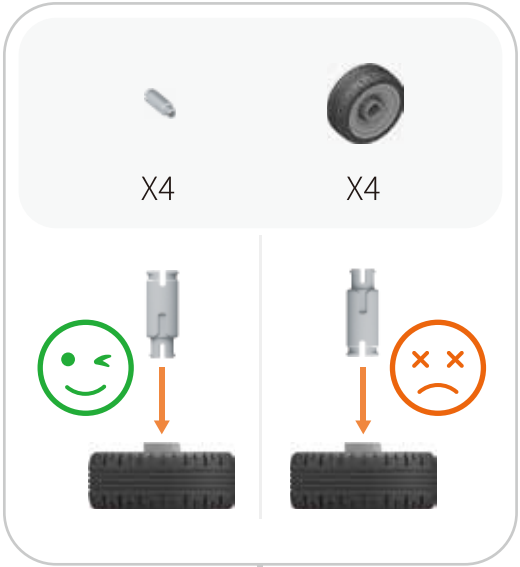

X4

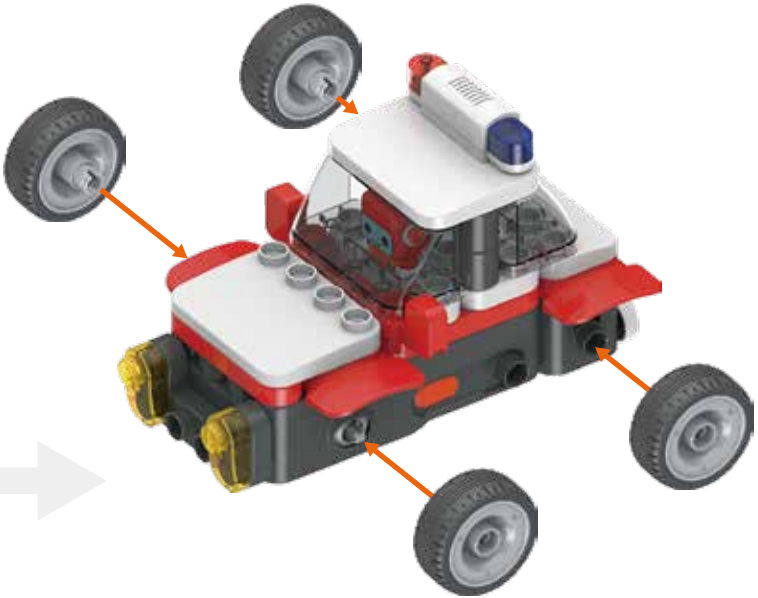

This step should be done by an adult or under adult supervision.

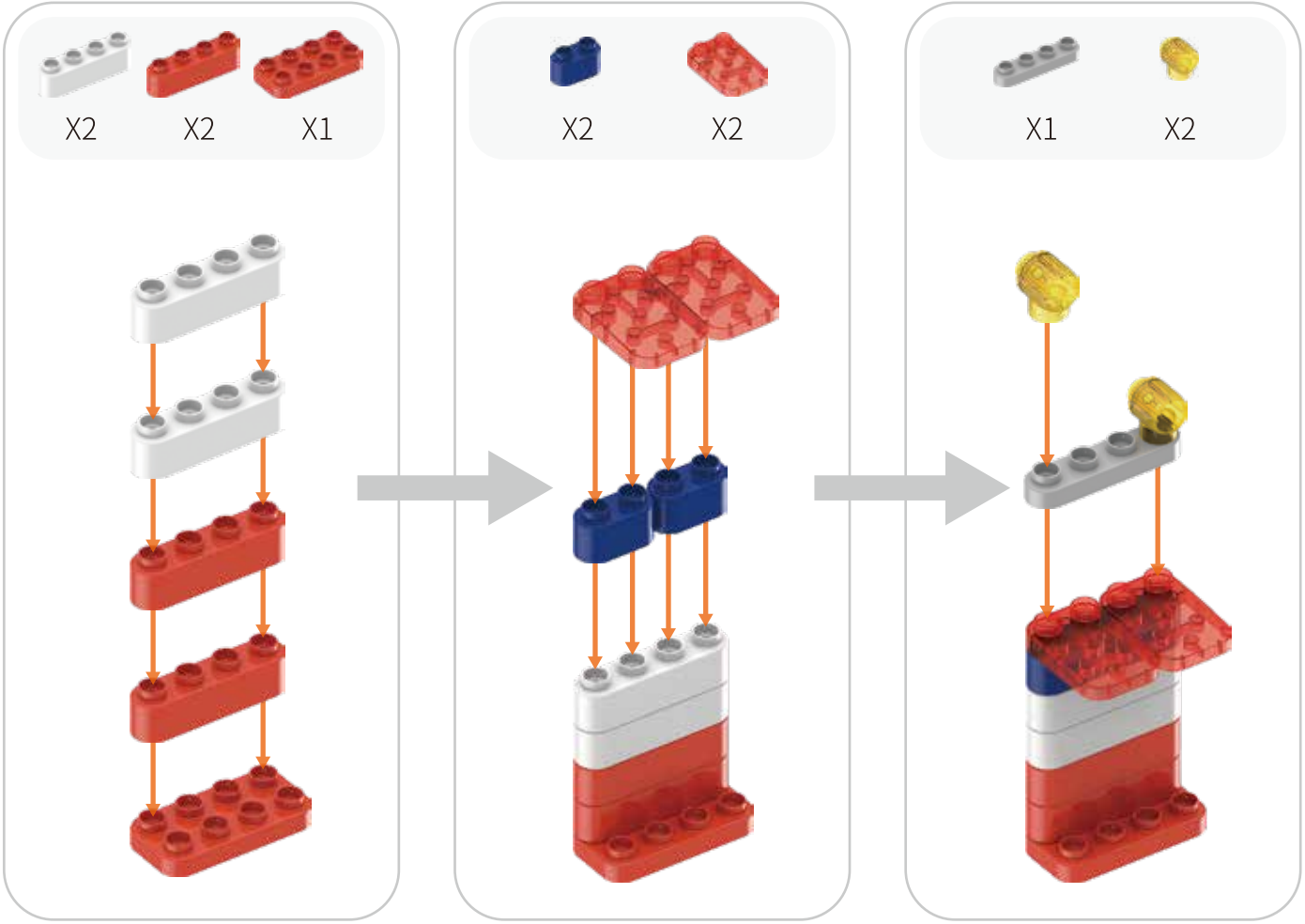
X2
X2
X1
X2
X2
X1
X2

21

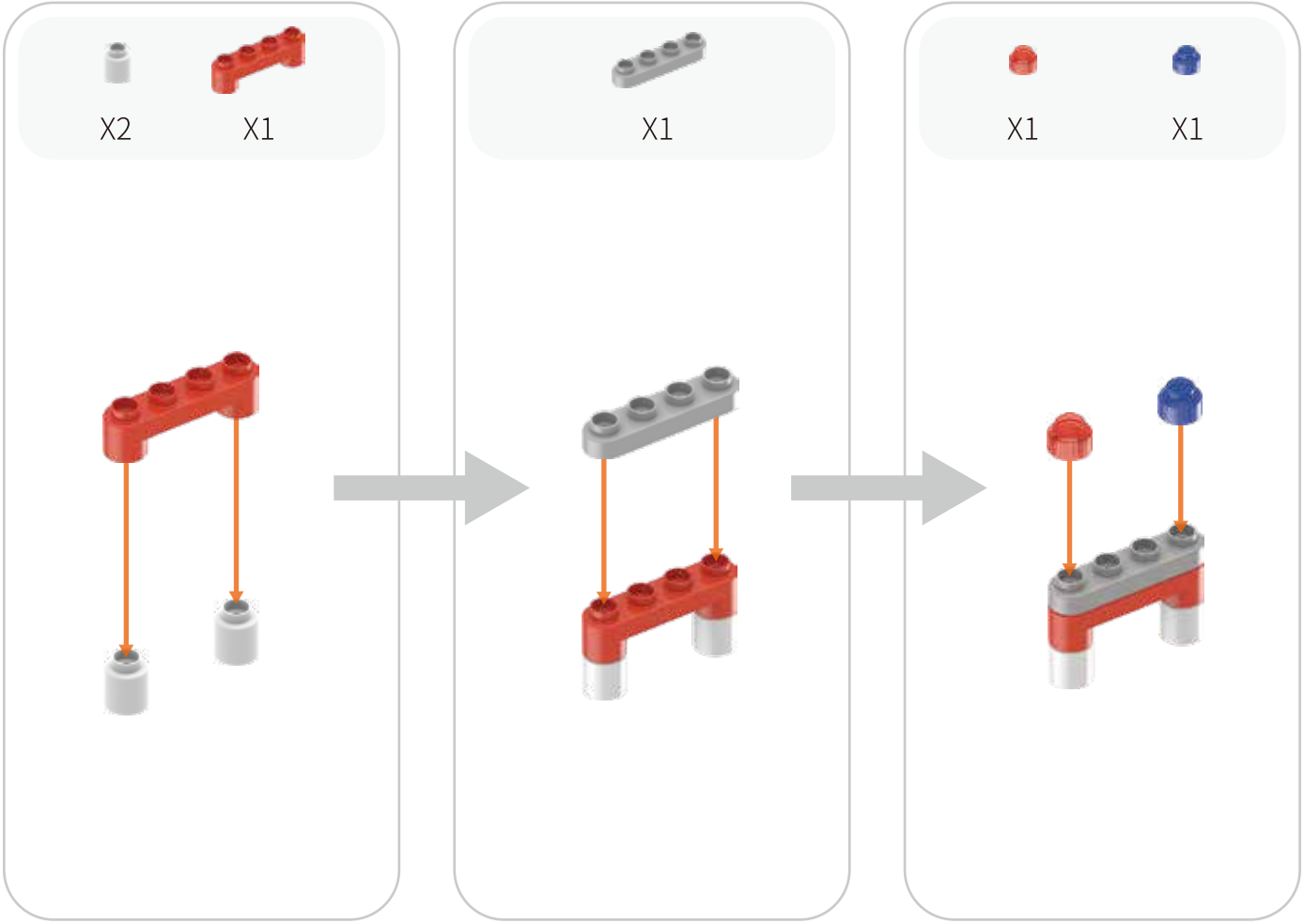

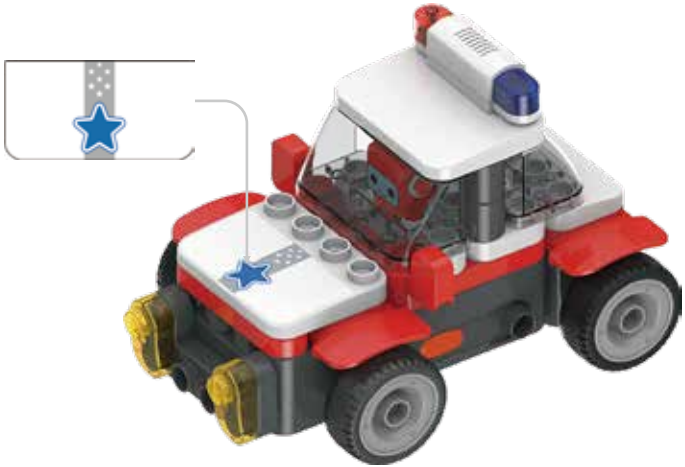

Note:

1. If the lights or sounds are weak or stop working, change the batteries.
2. If the batteries have run out of power, or if you don't plan to use them for a long time, please remove them from the toy. Properly dispose of the old batteries. Do not place them within reach of children, as they pose a choking hazard.
3. Do not charge non-rechargeable batteries. Children should only charge batteries under adult supervision. The batteries should only be charged after removing them from the toy.
4. Do not mix old and new batteries. Do not mix different types of batteries.
5. Please insert the batteries in the correct position according to the positive and negative signs. Do not install them backwards.

Maintenance

1. Keep this product away from strong sunlight and heat.
2. Do not submerge in water, otherwise it may cause damage to the electronic parts.
3. Please check the batteries and other accessories before use. If you encounter anything broken, immediately stop using the product until the damage has been repaired. Aside from removing the battery, you should not attempt any further disassembly or maintenance on this product.

Preparation

Before assembly, please prepare six 1.5 V AA batteries and a Phillips head screwdriver (not included).

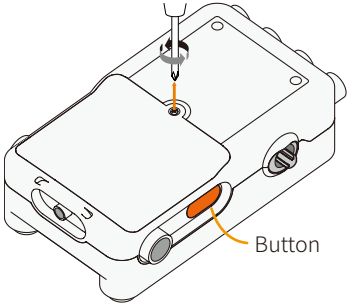

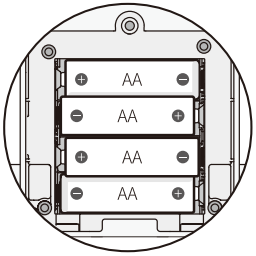

Main control block battery installation diagram

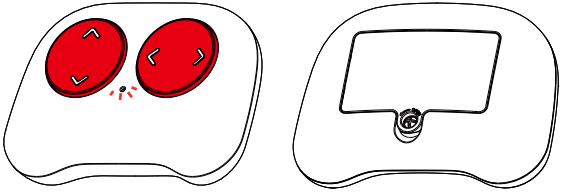

1 Installing the main control block battery

- Use a Phillips head screwdriver. Unscrew the bottom screws counter-clockwise and remove the battery cover.
- Insert four 1.5 V AA batteries in the direction indicated inside the battery compartment.
- Replace the battery cover. Use the screwdriver and screw clockwise to fasten.
- Press the buttons on the sides. The main control block indicator lights will flash, and it will enter sync mode.

Note: The following steps should be done either by an adult or under adult supervision.

2 Remote control sync

- First, remove the transparent insulation strap on the back. Confirm the red indicator light in the front has started to flash.
- Confirm the main control block is on, then press any button on the remote control. The remote control will sync with the main control block.
- After sync is complete, the light on the remote control will automatically go out. If the indicator light continues to flash after 30 seconds, it means sync was not successful. Please re-start the sync process again. (See the “Re-start sync” page.)

*If the remote control isn’t used in 20 minutes, the main control block and remote control will go into standby mode. To use again, please first press the button on the side of the main control block.

Installing and changing the batteries

Note: The following steps should be done either by an adult or under adult supervision.

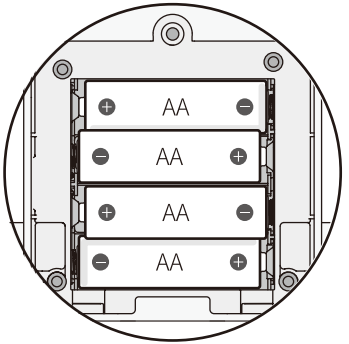

Main control block:
Four 1.5 V AA batteries

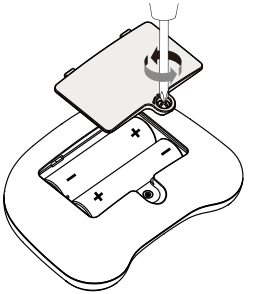

Remote control:
Two 1.5V AA batteries

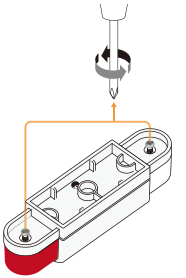

Place the positive pole of the battery on the left and install it vertically.

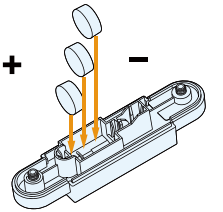

Lightbar: 3 1.5V AG13/LR44 button batteries

Changing the batteries

Use a Phillips head screwdriver. Unscrew the screws on the battery cover counter-clockwise. Remove the battery cover and take out the batteries.
Insert the batteries according to the positive and negative signs inside the battery compartment.
Replace the battery compartment cover and screw clockwise to fasten.

FAQs

Q: How do I determine if the car battery is about to run out?

A: The amount of battery power left can be determined by the following situations:
Situation 1: The car's speed is noticeably slow.
Situation 2: Its actions are slow or unresponsive.
Situation 3: It won't start up.

Q: What do I do if the car won't start?

A. There are a few possibilities. Confirm which one applies:
1. The batteries have no power. Please change them.
2. The batteries are installed backward. Please re-install them.
3. The on-off switch isn't switched on. Please try turning it on again.
4. The first time you used the remote control it wasn't synced. Please sync it according to the directions.
5. You didn't remove the transparent insulation tape from the remote control. Please remove it.
6. The wheels have been stopped up with a foreign object, e.g., hair or trash. Please clear it away.
7. If you're still having issues, please contact Customer Service.

How to re-sync

Note: **The following steps should be done either by an adult or under adult supervision.**

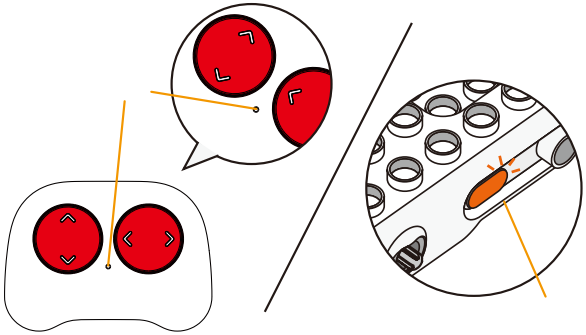

If you discover that the remote control indicator light or main control block indicator light is continuously flashing quickly, or if the remote control has no effect on the main control block, please re-start the sync process.

1. Remove the battery covers of the main control block and the remote control. Remove the batteries.

2. Re-install the batteries of the main control block according to the positive and negative signs indicated inside the battery compartment, then do the same for the remote control.

3. Press the main control block button, then press any button on the remote control to start sync. After sync is successful, the main control block and remote control indicator lights will turn off automatically.

FCC Compliance Statement

Please take attention that changes or modification not expressly approved by the party responsible for compliance could void the user’s authority to operate the equipment.

This device complies with Part 15 of the FCC Rules. Operation is subject to the following two conditions:

(1) This device may not cause harmful interference, and

(2) This device must accept any interference received, including interference that may cause undesired operation.

Customer service information

Thank you for choosing Pai Technology. We want to ensure that you have the best experience with our products. If you encounter any technical difficulties or issues with this product, please email our customer service team at cs@putao.com

Product information

Product name: Botzees RC! Police Car

Model: 62101

Suitable age range: 3+ years

Pai Technology Inc.

520 Broadway, Santa Monica, California, USA. 90401.

Patent and trademark

©2020 All rights reserved

iPhone, iPad, iPad Mini and iPad Pro are trademarks of Apple Inc.

Meets ASTM_F963, CPSIA related standards.

Made in China

Remote control FCC ID: 2APRA621001

Main control block FCC ID: 2APRA621002

pai
TECHNOLOGY

www.pai.technology