BTA007 BLUETOOTH ADAPTER

1.1 (PRODUCT OVERVIEWAL)

BTA007 is a Bluetooth adapter (Bluetooth receiver &transmitter two-in-one device), which supports receivingmode and transmitting mode. In receiving mode, you canchange the Bluetooth adapter into a Bluetooth speaker or a Bluetooth earphone by connecting it with a speaker or a wired earphone via AUX port. In transmitting mode, you can send the audio program of your cellphone, computer and TV to other Bluetooth player by wireless connecting. It supports the devices with 3.5mm earphone plug
(AUX) and audio fiber optic interface (SPDIF).

1.2 (PREPARATION BEFORE USE)

When you are ready to use BTA007, you need to prepare fully charged BTA007, Walkman , cellphone, TV or computer which supports 3.5mm audio output interface or audio fiber optic port(SPDIF)

1.3 (RODUCT PICTURE AND FUNCTION DEFINITION)

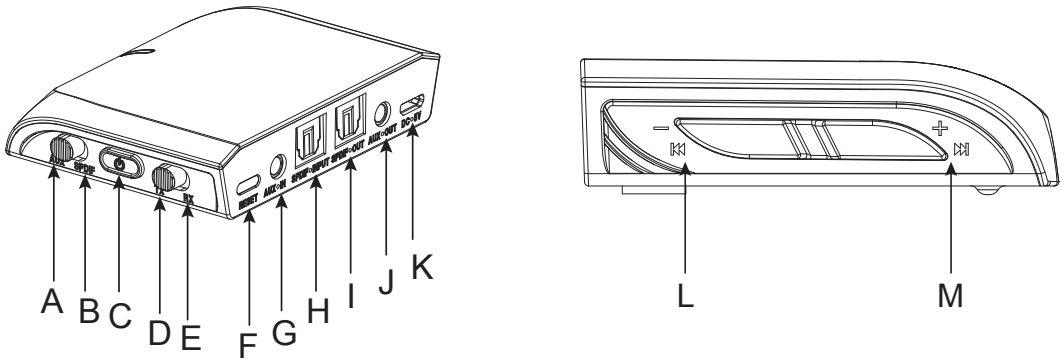

A:Audio interface choice is 3.5mm earphone port.

B:Audio interface choice is fiber optic port.

C:power supply button (multi-functional button)
D: Mode choice transmitting mode
E: Mode choice is receiving mode
F: Reset button
G: 3.5mm audio input port
H: Audio fiber optic input port
I: Audio fiber optic output port
J:3.5mm audio output port
K: Charging port
L:Volume - (short press)/ last song (long press) K: Volume + (short press)/ next song (long press)

1.4 (RODUCT PICTURE AND FUNCTION DEFINITION)

Bluetooth version	V4.1，C lass II
The Bluetooth chip	CSR 8670
Frequency range	2.402G H z-2.480G H z
Working time (RX mode)	About 12 hours
Working time (TX mode)	About 13 hours
Charging time	About 2 hours
Bluetooth protocol	A2DP, AVRCP
Multi-points supported	Support RX and TX mode. In TX mode, you can send your audio program to two Bluetooth devices simultaneously.
APTX use tips	One-connection, it will connect APTX(based on your earphone and speaker support APTX too), two connections, it change to the SBC CODEC automatically.
CODEC	SBC ,APTX,APTX-LL
Battery capacity	250m Ah rechargeable lithium battery.
Charging supply	5VD C ,100-240V AC adapter,≥300MA
Working temperature	-10-55℃
Dimensions	72*60*16m m

2.1 (PRODUCTS INSTRUCTIONS)

1、Power On

When it is off, long press the “MFB button” for two seconds and the blue light blinks.

2、Power Off

Long press "MFB" for three seconds until red light is off after flashes twice.

3、Mode change

Press the button to the TX to enter TX mode

Press the button to the RX to enter RX mode

4、Pairing mode

It can enter into the pairing mode if you double click the “MFB” after you turn it on. It can enter into the pairing mode automatically after it is power on for the first use. It can pair the devices which have been connected before automatically after it is power on. If it cannot find the devices connected before within eight seconds, it will enter into the pairing mode automatically. Several seconds (the more devices connected before, the longer it needs and every device need about eight seconds)

5、Clearing the pairing lists

After it is been changed the mode, it will clear the pairing information left by the last mode.

Tips: after the clearing of the pairing information, please delete or ignore the pairing information on the phone in case you fail to pair it.

6、Audio interface change

After it is been changed the mode, it will clear the pairing information left by the last mode.

Tips: after the clearing of the pairing information, please delete or ignore the pairing information on the phone in case you fail to pair it.

7、Reset

Short press the Reset key

8、Low battery and power off automatically

When the battery is low the red light will blink. When the voltage of the battery is below 3.1V, the adapter will be power off automatically

9、 Charging

When you insert it into the Micro USB, the adapter will reset the chipset first (can solve the problem of crash) and then charge itself.

10、Use under charging

When you insert the adapter to the socket, you can turn it on and use the adapter normally. However, we don’ t advise to use this function considering the life of the battery

11、 Multi-points supported function/ function of connecting two devices one time

When you insert it into the Micro USB, the adapter will reset the chipset first (can solve the problem of crash) and then charge itself

1) TX MODE

Choose TX mode after turn it on, and let the first Bluetooth device, say BYZ YS 008, get into pairing mode (Long press the MFB button of YS008 at least 6 seconds until see the alternative flash of red and blue light). The green light is on after successful pairing (supports APTX, APTXLL green light is on and doesn’t support blue light on). Double click MFB button of the adapter, the green LED light of adapter blinks quickly, get the second Bluetooth device, say BTA007, to enter into the pairing mode (Long press the MFB button of BTA007 until see the alternative flash of red and blue light) wait several seconds, it will connect the second device automatically. After successful connection, the blue LED light is on. Tips: when it connects two devices, CODEC will automatically change into SBC mode because of the speed of transmission.

2) RX mode

Choose X mode after turn it on, turn on the first cellphone or another Bluetooth device, and search and choose BTA007 to connect. After connected, double click the MFB button to disconnect the first cellphone or other connect Bluetooth device and enter into the pairing mode again. Make the second cellphone or another Bluetooth device enter into Bluetooth stage; search and connect BTA007. After connection, turn on the first Bluetooth device and choose BTA007 in your paired list to connect. And then two cellphones or other Bluetooth devices connect to the adapter successfully.

12、 LED instructions of different mode

TX Mode		RX Mode
Power On	Blue LED light flashes 3 times	Blue LED light flashes 3 times
Power Off	Red LED light is off after it is on for 1 second	Red LED light is off after it is on for 1 second
Pair	Blue LED light flashes quickly	Red and blue LED alternatively flash
Connected	When CODEC is SBC, blue LED light flashes once every second; When CODEC is APTX, green LED light flashes twice every ten seconds; When CODEC is APTX-LL, white LED light flashes three times every ten seconds	When CODEC is SBC, blue LED light is on; When CODEC is APTX, green LED light flashes twice every ten seconds; When CODEC is APTX-LL, white LED light flashes three times every ten seconds.
Tips:	When it connects two devices, CODEC can be compatible with the devices with lower-level CODEC, APTX/APTX-LL will automatically change into SBC mode. For example, device A: APT-LL, device B: APTX-LL, then, CODEC=APTX-LL; If device A=APTX-LL, device B= SBC, then CODEC=SBC.	

2.2 (COMMON QUESTIONS)

1) It can be connected to the cellphone before, but cannot be connected now.
Make sure the adapter is in RX mode, delete the paired BTA007 in your cellphone, and double click the MFB button to assure the adapter enter into the pair mode and search and connect the phone again.
2) Cannot connect other Bluetooth earphones or speakers.
Make sure the adapter is in TX mode, double click the MFB button to search, it can connect automatically. You can know whether it has connected other Bluetooth devices by seeing the LED of the adapter.
3) Don’t know how to use different modes
Please check the explanations of 4,5,6.
4) Can it be used under charging?

Yes. However, we don’t advise to use this function considering the life of the battery.

2.3 BATTERY AND SAFETY）

BTA007 has built-in chargeable lithium battery. Only after two or three times charging and discharging, can the new battery reach the top performance. The battery can be charged and discharged for several hundred times, but it will finally be useless. Please don’t overcharge the battery because the overcharge of battery will shorten the life of the battery. If the fully-charged battery hasn’t been used for a long time, the

battery will discharge itself for a period of time.
If you put BTA007 in freezing cold or burning hot places, for example, if you put it in the closed car both in winter or summer, you will shorten the life and capacity of the battery. Please keep the temperature of the battery between 15 ℃ and 25 ℃. When the temperature is below zero, the performance of the battery is especially limited. Please don’t throw the battery into the fire in case it explodes. The damaged battery also may explode.

2.4 Repair and Maintenance

Your equipment is a product with excellent design and workmanship and should be used carefully. The following Suggestions will help you effectively use the warranty service.

- Please do not allow children to play with this product
- Do not hit or slap products
- Please avoid the water and high temperature. If you use it in cold places you will also cause the degradation of the products performance.
- Do not put the product into the fire.
- If there is something wrong with the product, please contact the dealer and don’t take it apart and put it together alone.
- If there is rust in the appearance and the surface spalls after some time, it belongs to the phenomenon of metal oxide and it is not under warranty.

2.5 Other matters of attention

changes or modifications not expressly approved by the party responsible for compliance could void the user’ s authority to operate the equipment.

This equipment has been tested and found to comply with the limits for a Class B digital device, pursuant to Part 15 of the FCC Rules. These limits are designed to provide reasonable protection against harmful interference in a residential installation. This equipment generates, uses and can radiate radio frequency energy and, if not installed and used in accordance with the instructions, may cause harmful interference to radio communications. However, there is no guarantee that interference will not occur in a particular installation.

If this equipment does cause harmful interference to radio or television reception, which can be determined by turning the equipment off and on, the user is encouraged to try to correct the interference by one or more of the following measures:

-- Reorient or relocate the receiving antenna.

-- Increase the separation between the equipment and receiver.

-- Connect the equipment into an outlet on a circuit different from that to which the receiver is connected.

-- Consult the dealer or an experienced radio/TV technician for help.