Alpina Series Installation Instructions

Touch-Free Vandal Resistant Faucets

CHICAGO FAUCETS®
Geberit Group

Safety Information

Read this entire user guide to ensure proper installation. Compliance and conformity to local codes and ordinances is the responsibility of the installer. The following safety notes must always be complied with during handling of this product:

- Make sure there is enough space and lighting available during installation and service.
- Do not modify or convert this Chicago Faucets product yourself. All warranties will be voided.

Internal Antenna Specifications

- Peak Gain of the antenna: 1.5 dBi
- Frequency range: 2.4 GHz
- FCC ID: 2APTX-CFC05
- IC 31327-CFC05

Operating static pressure: 20-125 PSI (138-862 kPa)

Min. static pressure for mixing: 30 PSI (207 kPa)

COLD water inlet temperature range: 40-80 F (4-27 C)

HOT water inlet temperature range: 100-180 F (38-82 C)

Max. hot water range outlet from thermostatic mixing valve: 80-120 F (27-49 C)

Max. hot water range outlet from mechanical mixing valve: 40-140 F (4-60 C)

Max. pressure differential between Hot & Cold water supplies: 20%; Min. inlet water supply temperature differential: 20 F (9 C)

Notice to the Installer

Read this entire instruction sheet before installing to ensure proper installation. Installation must comply with local codes and ordinances. Do not use pipe dope.Care shall be exercised when installing the device to prevent marring the exposed, decorative surfaces. The supply piping to these devices shall be securely anchored to the building structure to prevent installed device from unnecessary movement when operated by the user.

FCC Caution: Any changes or modifications not expressly approved by the party responsible for compliance could void the user's authority to operate this equipment.

This equipment complies with FCC radiation exposure limits set forth for an uncontrolled environment. This equipment can be installed and operated at a distance of 5 mm between the radiator and your body. This Device complies with Innovation, Science and Economic Development Canada License-exempt RSS standard(s). Operation is subject to the following two conditions: 1) this device may not cause interference, and 2) this device must accept any interference, including interference that may cause undesired operation of the device.This equipment complies with RSS-102 radiation exposure limits set forth for an uncontrolled environment. This equipment should be installed and operated with minimum distance of 15 mm between the radiator aand body extremities.

Cet appareil est conforme aux normes RSS exemptes de licence d'Innovation, Science et Développement économique Canada. Son fonctionnement est soumis aux deux conditions suivantes: 1) cet appareil ne doit pas provoquer d'interférences, et 2) cet appareil doit accepter toute interférence, y compris les interférences susceptibles de provoquer un fonctionnement indésirable de l'appareil. Cet équipement est conforme aux limites d'exposition aux rayonnements RSS-102 établies pour un environnement non contrôlé. Cet équipement doit être installé et utilisé à distance minimum de 15 mm entre le radiateur et votre corps.

Installation may be performed at different times of construction by different individuals. Instructions should be left onwith the facility or maintenance manager.

NOTE: Before installation, turn off water supplies to existing faucet and remove faucet if replacing. Clean faucet basin and clear away debris. **Flush all supply lines before connecting to faucet.** Failure to do so can result in debris clogging the inlets and/or internal control and mixing valves.

In order to complete the installation, you will need the following tools and supplies:

- Phillips Screwdriver, #1, #2, #3
- Adjustable Wrench
- Drill, with 3/16˝ Bit
- Plumbers Putty
- Mallet
- Tape Measure
- Silicone-based Lubricant
- 1/2˝ Deep Socket or #3 Flat Head Screwdriver
- 3mm hex key

Mounting Faucet

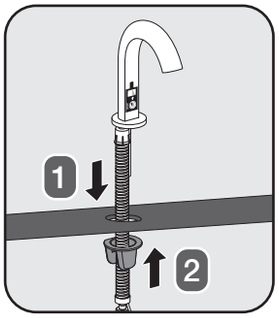

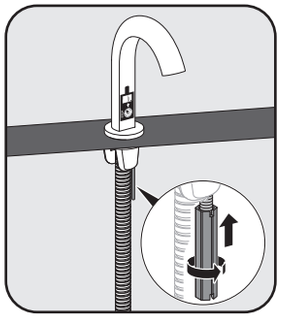

1. Feed the spout hose through the deck and position the spout.
2. Position the spout through the cup washer.
3. Tighten nut onto threaded rod using a screwdriver, wrench, or 1/2˝ socket.

Install Faucet Adapter

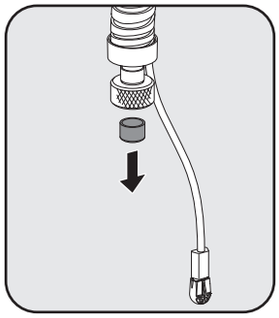

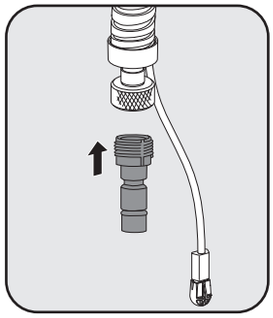

1. Remove and discard bottom cap.
2. Connect brass adapter to spout hose

Mounting Control Box

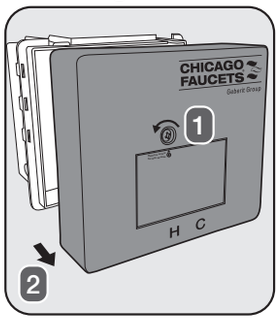

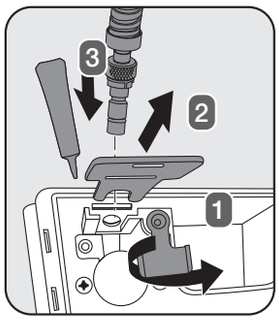

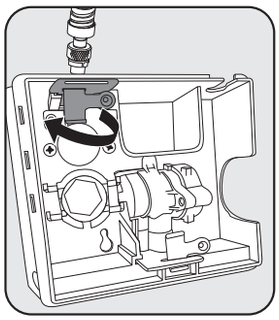

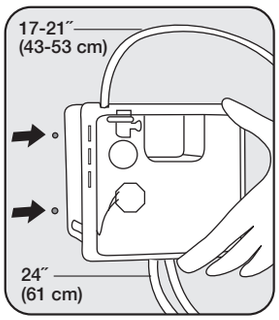

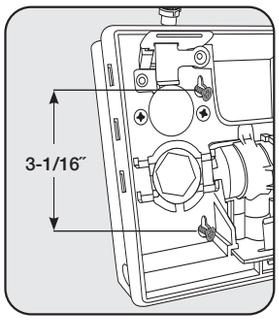

1. Remove the control box cover by using a #2 Phillips screwdriver to loosen the cover screw.
2. Pivot the yellow locking tab and remove the metal key at the top of the control box. Apply a silicone-based lubricant to the end of the spout hose and insert it through the hole.
3. Be sure to seat the hose firmly before reinstalling the metal key and securing it with the yellow locking tab.
4. Determine the position of the coantrol box under the sink. Hold the control box against the wall and mark the locations of the two mounting holes. Orientation is not critical.
5. Drill 3/16˝ holes, install wall anchors and mounting screws. Leave at least 1/2˝ (12mm) of the screw head exposed. Secure the control box to the wall using a #2 Phillips screwdriver.

Connecting Water Supply and Positioning Power Wire from Spout (dual supply unit shown)

IMPORTANT: The filter screen gaskets seal the connection against leaks and must be installed as shown.

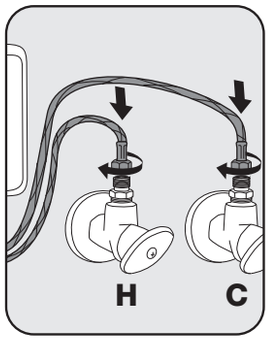

1. Attach the 3/8˝ female compression supply hoses from the control box to the supply stops. Use a wrench to tighten the nuts to the supply stops.

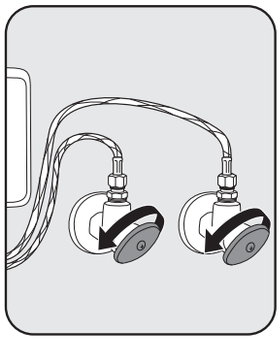

2. Open the supply stops and check for leaks. Note: water may run through spout.

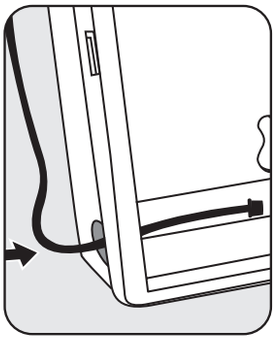

3. Bring wire into box. Use length of box for measurement. Snap into holder on side.

IMPORTANT: Remove any debris or hardware from the sink before opening the supplies and testing the faucet.

WARNING! Delivery of water to fixtures intended for hand washing is recommended to be controlled by valves listed to ASSE 1070. This fitting is NOT factory preset and can be adjusted to deliver water at temperatures exceeding 110°F (43°C). Further, mechanical mixing valves DO NOT provide automatic control of water temperature. Due to effects of various water conditions, periodic verification of outlet water temperature is required. Spout hose (865.963.00.0) is not to be used as a pressurized supply line and is only for connecting faucet to the control box.

Connect Power: Wire Placement

IMPORTANT!
Be sure when connecting wires to avoid obstructing screw hole for control box cover.

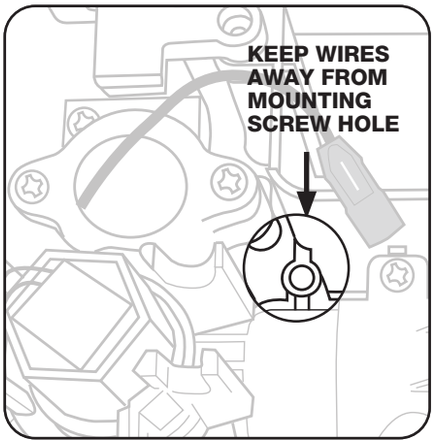

USE THE YELLOW WIRE HARNESS
As indicated in the following sections, the yellow wire harness will help organize wires in the box.

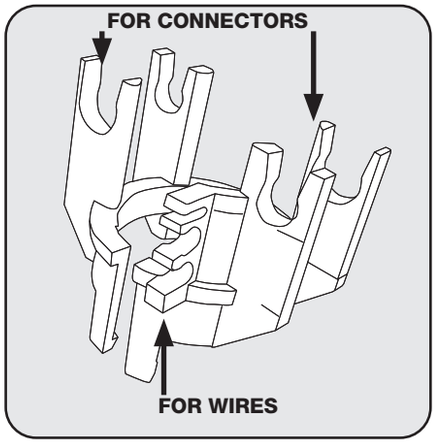

Connect Power: Battery (DC) Power

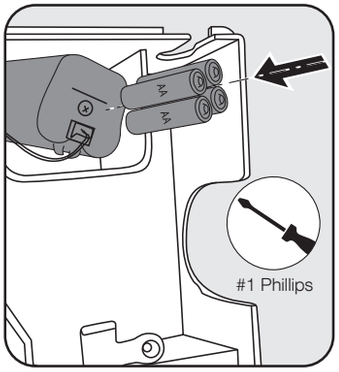

1. Open the yellow battery housing and insert 4 'AA' batteries. NOTE: Make sure the batteries are oriented according to the diagram inside the housing before testing the faucet.

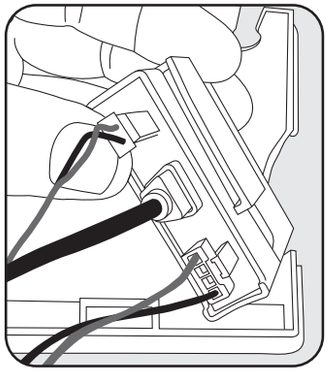

2. Attach the two adapter wires and spout cable to controller.

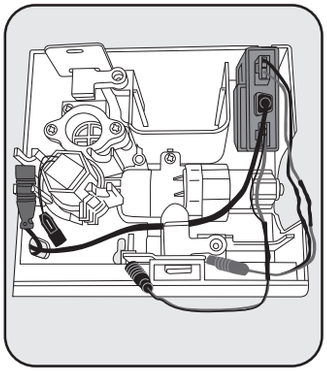

3. Place controller into control box.

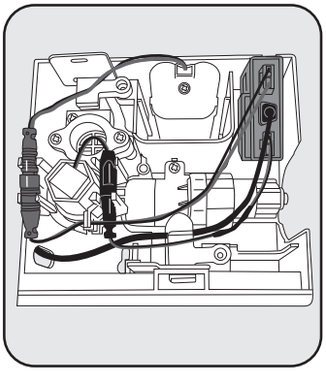

4. Connect adapter wires to battery and solenoid – gray connector to gray connector and black connector to black connector. Secure in holders on either side of solenoid.

Connect Power: LTPS (DC) Power

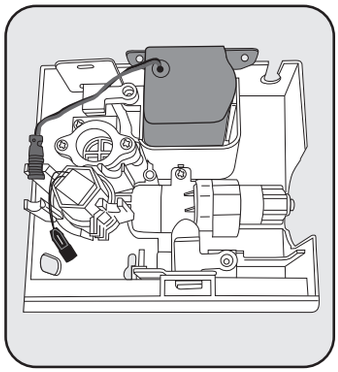

1. Insert LTPS battery module in control box as shown.

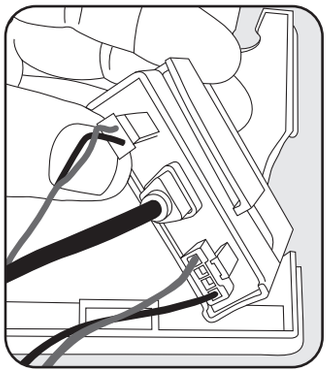

2. Attach the two adapter wires and spout cable to controller.

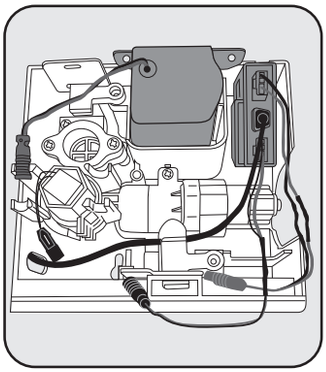

3. Place controller into control box.

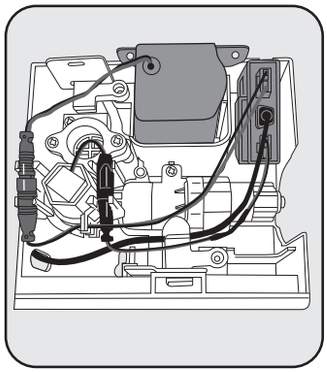

4. Connect adapter wires to battery and solenoid – gray connector to gray connector and black connector to black connector. Secure in holders on either side of solenoid.

Connect Power: (AC) Power

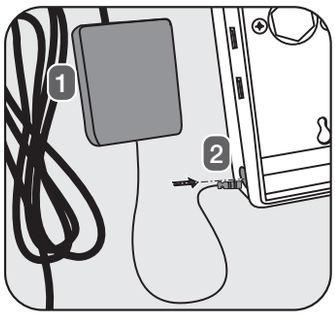

1. Choose a location and mount the transformer. Run the cable from the transformer through the opening in the control box.

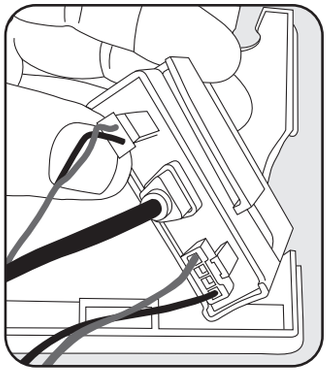

2. Attach the two adapter wires and spout cable to controller.

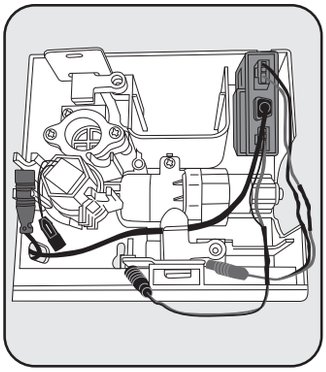

3. Place controller into control box.

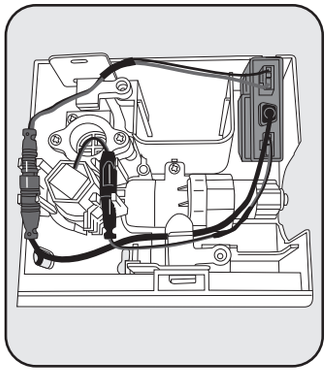

4. Connect adapter wires to solenoid – gray connector to gray connector and black connector to black connector. Secure in holders on either side of solenoid.

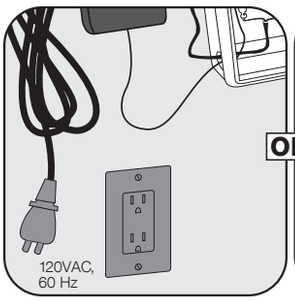

i. Plug the transformer into the wall.

OR

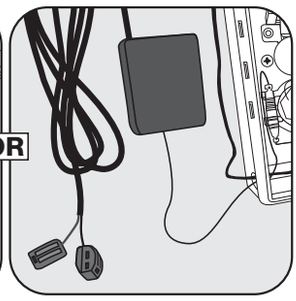

ii. Wire up the transformer to the main line.

Connect Power: Self Sustaining Power System (SSPS)

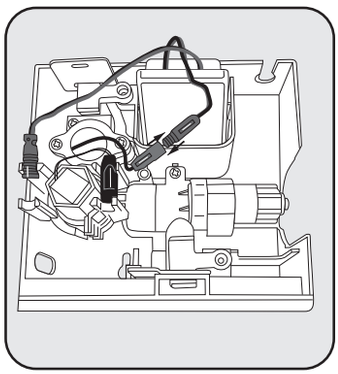

1. Insert SSPS module in control box as shown. Connect the SSPS battery pack to the turbine (blue to blue connectors). Secure lines to available slots to avoid pinching wires.

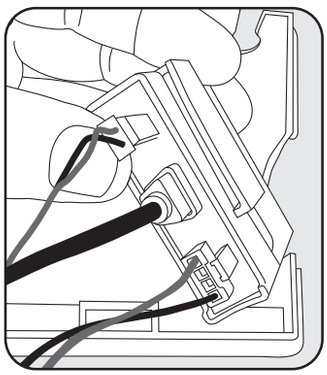

2. Attach the two adapter wires and spout cable to controller.

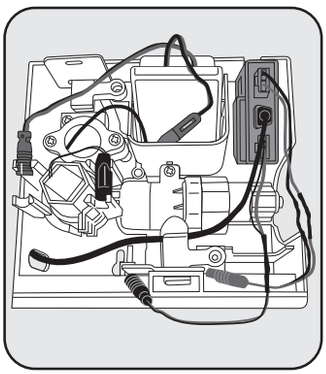

3. Place controller into control box.

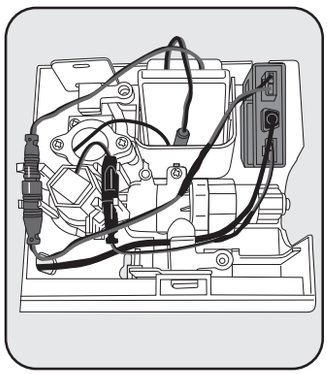

4. Connect adapter wires to battery and solenoid – gray connector to gray connector and black connector to black connector. Secure in holders on either side of solenoid.

Completing Installation: Testing and Adjustment

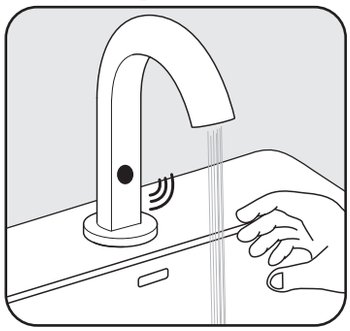

1. Once wiring is complete, the red sensor light at the faucet outlet will glow continuously for 5 seconds. After the light switches off, place your hands in front of the faucet. The faucet should activate and water should flow.

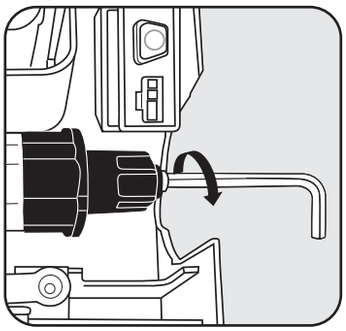

2. Adjusting the Water Temperature

a. The mixer handle inside control box is used to adjust water temperature in dual-supply installations. Loosen the cap screw until the handle turns freely (do not remove the screw) with a 3mm (7/64″) hex wrench.

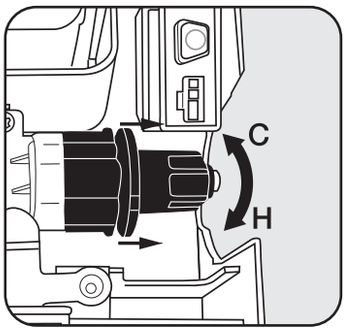

b. As a safety feature the cap must be partially pulled from the valve to adjust temperature. (Move the controller if necessary to access the handle.) Turn the handle clockwise to decrease temperature or counter-clockwise to increase temperature.

c. Push the cap in and tighten cap screw.

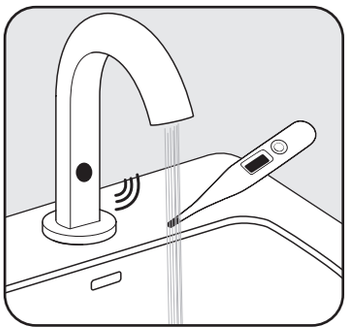

d. Mixed water temperature must be checked at the point of use and the CFC mixing valve adjusted to ensure delivery of water at a safe temperature no exceeding 110°F (43°C). Water temperatures in excess 110°F (43°C) are dangerous and may cause scalding, severe injury or death!

3. Reinstall the control box cover and secure it with the #2 Phillips screw.

This equipment has been tested and found to comply with the limits for a Class B digital device, pursuant to Part 15 of the FCC Rules. These limits are designed to provide reasonable protection against harmful interference in a residential installation. This equipment generates uses and can radiate radio frequency energy and, if not installed and used in accordance with the instructions, may cause harmful interference to radio communications. However, there is no guarantee that interference will not occur in a particular installation. If this equipment does cause harmful interference to radio or television reception, which can be determined by turning the equipment off and on, the user is encouraged to try to correct the interference by one of the following measures:

- Reorient or relocate the receiving antenna.
- Increase the separation between the equipment and receiver.
- Connect the equipment into an outlet on a circuit different from that to which the receiver is connected.
- Consult the dealer or an experienced radio/TV technician for help.

This device complies with Part 15 of the FCC Rules. Operation is subject to the following two conditions: (1) This device may not cause harmful interference, and (2) this device must accept any interference received, including interference that may cause undesired operation.

QUICK TROUBLESHOOTING

Before troubleshooting, remove any objects in detection zone and make sure sensor is clear of debris. Ensure power is applied and solid red light appears during first 5 seconds after power-up.

The faucet is leaking: From outlet – tighten or replace outlet insert using included key. From supply stops – install or replace filter screen gaskets (see diagram on pg. 1).

No water flow or flow is limited: Make sure supply hoses are connected and supply stops are fully open. Clean or replace filter screen gaskets or outlet insert.

Water flow does not stop: If water flows continuously but stops when hand enters detection zone, reverse solenoid electrical connections.

Faucet does not properly detect user: Remove and reapply power or run faucet to maximum run time. This will cause automatic recalibration of sensing field. Recalibration is complete when solid red light disappears.

If the steps above do not solve the problem, you may need to replace the spout assembly or control box. For additional information contact Chicago Faucets customer service at 800/832-8783

Care and Maintenance

Periodic inspection and yearly maintenance by a licensed contractor is required for all thermostatic mixing elements. Corrosive water conditions and/or unauthorized adjustments or repair could render the thermostatic valve ineffective for service intended. Regular checking and cleaning of the valve's internal components and check stops helps assure maximum life and proper product function. Frequency of cleaning and inspection depends on local water conditions. All Chicago Faucets fittings are designed and engineered to meet or exceed industry performance standards. Care should be taken when cleaning this product. Do not use abrasive cleaners, chemicals, or solvents as they can result in surface damage. Use mild soap with warm water for cleaning and protecting the surface of Chicago Faucets fittings.

For additional technical assistance, call 800/TEC-TRUE (800-832-8783) or visit our website at chicagofaucets.com.

CHICAGO FAUCETS LIMITED WARRANTY

TO WHOM DOES THIS WARRANTY APPLY? — The Company extends the following limited warranty to the original user only.

WHAT DOES THIS WARRANTY COVER AND HOW LONG DOES IT LAST?
This warranty covers the following Commercial Products:

LIFETIME FAUCET WARRANTY — The "Faucet," defined as any metal cast, forged, stamped or formed portion of the Product, not including electronic or moving parts or other products separately covered by this Limited Warranty or water restricting components or other components, is warranted against material manufacturing defects for the life of the Product.

FIVE YEAR FAUCET WARRANTY — Certain Products and portions of the Product are warranted against material manufacturing defects for a period of five (5) years from the date of Product purchase. Products warranted against material manufacturing defects for a period of five (5) years from the date of Product purchase are referred to by the product numbers 42X, 43X, 15XX and E-Tronic® - 4X, 5X, 6X, 7X, 8X and 9X. All zinc die cast portions of Product are warranted against material manufacturing defects for a period of five (5) years from the date of Product purchase.

THREE YEAR ELECTRONICS WARRANTY — Electronic components, including the solenoid, are warranted for three (3) years from the date of installation.

FIVE YEAR CARTRIDGE WARRANTY — The "Cartridge", defined as the metal portion of any Product typically referred to by the product numbers containing 1-099, 1-100, 377X, 217X and 274X, excluding any rubber or plastic components, is warranted against material manufacturing defects for a period of five (5) years from the date of Product purchase. All Cartridges included in the Company's Single Control or Shower Products also are warranted against material manufacturing defects for a period of five (5) years from the date of Product purchase.

ONE YEAR FINISH WARRANTY – COMMERCIAL — For Products used in commercial applications, the finish of the Product is warranted against material manufacturing defects for a period of one (1) year from the date of Product purchase.

OTHER WARRANTIES — All other Products not covered above are warranted against material manufacturing defects for a period of one (1) year from the date of Product purchase.

Other restrictions and limitations apply. For complete warranty details, call Chicago Faucets Customer Service at 847-803-5000 or visit chicagofaucets.com.

LTPS End of Life Directives (Recycling) In an effort to produce environmentally conscious products, the LTPS contains materials that are required to be recycled by specialized companies. Please ensure you dispose of your LTPS according to local regulations. Follow applicable laws and regulations for transport, shipping, and disposal of batteries. For details on, and locations for recycling lithium based batteries, please contact a government recycling agency, your waste-disposal service, or visit reputable on-line recycling sources such as www.call2recycle.org.

The Chicago Faucet Company
2100 South Clearwater Drive
Des Plaines, IL 60018
Phone: 847/803-5000
Fax: 847/849-1845
Technical: 800/832-8783
www.chicagofaucets.com

© 2024 Chicago Faucet Company