POWER SMITH WORK LIGHTS

6000 LUMEN LED WORK LIGHT

PVL6000A

Operator's Manual

TOLL-FREE HELP LINE: 888-552-8665

WWW.POWERSMITHTPRODUCTS.COM

WARNING: To reduce the risk of injury, user must read and understand this operator's manual before operating this product.

2 YEAR WARRANTY
GARANTIE D'ANNÉE
GARANTÍA DEL AÑO

SAVE THIS MANUAL FOR FUTURE REFERENCE

IMPORTANT SAFETY INSTRUCTIONS

READ AND UNDERSTAND ALL WARNINGS, CAUTIONS AND OPERATING INSTRUCTIONS BEFORE USING THIS EQUIPMENT. Failure to follow all instructions listed below may result in electric shock, fire and/or serious personal injury.

CAUTION: RISK OF ELECTRIC SHOCK, Do not use with extension cord near water or where water may accumulate. Keep work light at least 16 feet from pools and spas. Keep plugs and receptacles dry. Use only three wire outdoor extension cords with grounded plugs and grounded receptacles.

WARNING: TO REDUCE THE RISK OF FIRE, ELECTRIC SHOCK OR PERSONAL INJURY.

- **Ground Fault Circuit Interrupter (GFCI) protection should be provided** on the circuit(s) or outlet(s) to be used for the work light at wet location. Receptacles are available having the built-in GFCI protection and are able to be used for this measure of safety.
- **Use only with an extension cord for outdoor use,** such as an extension cord of cord type: SW, SW-A, SOW, SOW-A, STW, STW-A, STOW, STOW-A, SJW, SJW-A, SJOW, SJOW-A, SJTW, SJTW-A, or SJTOW, SJTOW-A.
- **Do not look directly at the lighted lamps to avoid eye injuries.**
- **Always keep the work light away from any flammable surface or materials.**
- **Always check damaged or worn-out parts before using the work light.** Broken parts will affect the work light operation. Replace or repair damaged or worn parts immediately. If repairs are needed, consult a professional electrician.
- **Do not use a pressure washer to clean this product.**
- **Do not modify the work light in any way.** Unauthorized modification may impair the function and/or safety and could affect the life of the product. There are specific applications for which the work light was designed.
- **Store work light in a secure place out of the reach of children.** Inspect it for good working condition prior to storage and before re-use.

Caution: Changes or modifications to this unit not expressly approved by the party responsible for compliance could void the user's authority to operate the equipment.

NOTE: This equipment has been tested and found to comply with the limits for a Class B digital device, pursuant to part 15 of the FCC Rules. These limits are designed to provide reasonable protection against harmful interference in a residential installation. This equipment generates, uses and can radiate radio frequency energy and, if not installed and used in accordance with the instructions, may cause harmful interference to radio communications. However, there is no guarantee that interference will not occur in a particular installation. If this equipment does cause harmful interference to radio or television reception, which can be determined by turning the equipment off and on, the user is encouraged to try to correct the interference by one or more of the following measures:
— Reorient or relocate the receiving antenna.
— increase the separation between the equipment and receiver.
— Connect the equipment into an outlet on a circuit different from that to which the receiver is connected.
— Consult the dealer or an experienced radio/TV technician for help.

WARNING: This device complies with part 15 of the FCC Rules. Operation is subject to the following two conditions: (1) This device may not cause harmful interference, and (2) this device must accept any interference received, including interference that may cause undesired operation.

SAVE THESE INSTRUCTIONS

SPECIFICATIONS

- Model: ---------- PVL6000A
- Rated Power: ---------- 120V~, 60Hz, 52W
- Brightness: ---------- 6000 Lumens
- Color Temperature: --------5000K Bright White
- Cord Length:---------- 6 ft.
- Tripod Height: ---------- 30.5” - 68”
- Net Weight: ---------- 8.2 lb

KNOWING YOUR WORK LIGHT

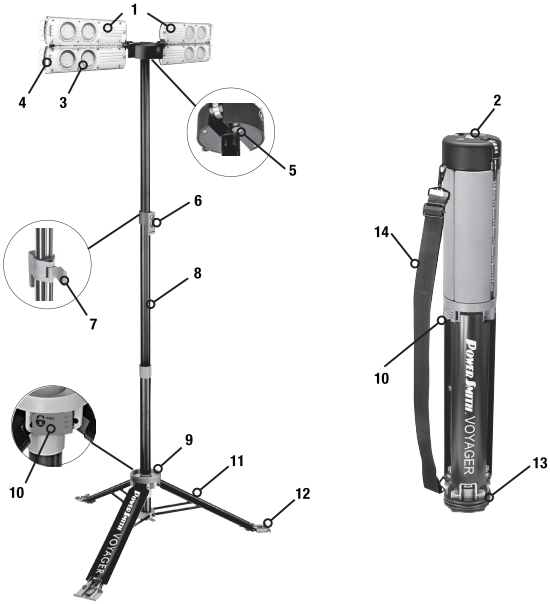

FIG 1

1. Light Heads
2. Lock Button for Light Heads
3. LEDs
4. Night and Alert LEDs
5. On-Board Switch
6. Remote Control
7. Tripod Locking Clips
8. Tripod
9. Leg Connector
10. Leg Locking Clip
11. Tripod Legs
12. Anti-Slip Feet
13. Power Cord
14. Shoulder Strap

UNPACKING AND CONTENT

IMPORTANT! Due to modern mass production techniques, it is unlikely the product is faulty or that a part is missing. If you find anything wrong, do not operate the product until the parts have been replaced or the fault has been rectified. Failure to do so could result in serious personal injury.

CONTENTS IN PACKAGE

Description	QTY	Description	QTY
Work Light	1	Foot Spikes	3
Shoulder Strap	1	Quick Start Guide	1
Operator's Manual	1		

ASSEMBLY INSTRUCTION

SETTING UP AND BREAKING DOWN THE LIGHT (FIG 2)

Your work light is fully assembled and ready to use out of box.

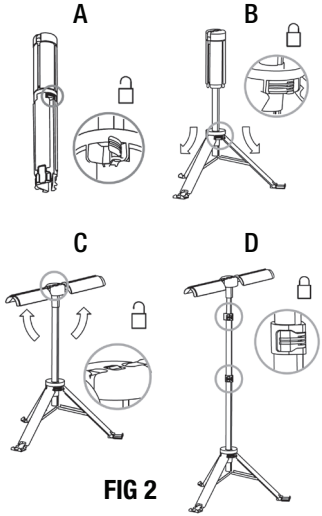

FIG 2

To Set Up the Light: From folded position A to working position D.

1. Unwrap the power cord (13).
2. Release the leg locking clip (10). See position A.
3. Expand the tripod legs (11) and then lock the leg locking clip. See position B.
4. Place the light head locking button (2) in Unlock position, then flip the light heads (1) up. See position C.
5. Release tripod locking clips (7), raise the tripod (8) and lock the tripod locking clips. See position D.
6. Adjust the light heads (1) to be desired position.

To Break Down the Light: From postion D back to position A.

1. Release the tripod locking clips (7), lower tripod all the way down and lock the tripod locking clips.
2. Fold the light heads (1) down in a tube shape.
3. Release the leg locking clip (10).
4. Raise the leg connector (9) until the light heads nest inside.
5. Lock the leg locking clip.
6. Wrap the power cord.

You may also refer to "QUICK START GUIDE" sheet which comes with the product.

OPERATION

ON-BOARD SWITCH

Your light has a red on-board switch (5-FIG1). See Figure 1 for its location. This switch turns the light On and Off and controls the light mode. The light mode rotates in the following sequence by each press on the switch:

Work Light - Night Light - Flashing Alert Light - OFF

The switch has a delayed "OFF" function. If a light mode stays on for more than 15 seconds, the next press on the swich will turn off the light.

REMOTE CONTROL (FIG 3)

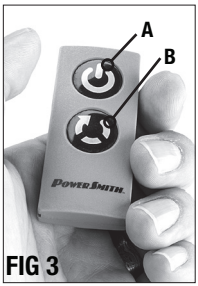

FIG 3

Your light includes a remote control LT6Z763 (6-FIG1). It docks in the middle of the tripod pole.

There are two buttons on the remote. The top one (A) is to turn the light On or Off. The bottom one (B) is to select the light mode among Work Light, Night Light and Flashing Alert Light.

Slide the remote up to take it off the holder. Always keep it in the holder when not in use.

The maximum control range is approximately 60 feet from the light.

The remote is powered by a 3V Lithium-Ion button battery CR2032L. Remove the four screws on the back cover to replace the battery.

The included remote control has been paired with your LED Work Light at the factory. If you are using a replacement remote control, pairing the remote with the light is needed. Unplug the light and wait at least 10 seconds. Plug the light back in, then press and hold the On/Off button (A) on the remote for at least 7 seconds until the light turns on. This completes the pairing process and the remote is ready to use.

ADJUSTING THE LIGHT HEADS

Your light has four adjustable light heads. They can be configured in dozens of ways to get light where it is needed.

Flipping the Light Heads: Place the lock button (2) in Unlock position. Flip the light heads on each side up or down to the desired position. Lock the light heads by placing the lock button in Lock position. See Fig 4 & 5.

Rotating the Light Heads: The light heads are able to rotate 330° around their center axis. See Fig 6.

CAUTION: Do not force the light head. If it stops rotating in one direction, try the other direction to reach the desired position.

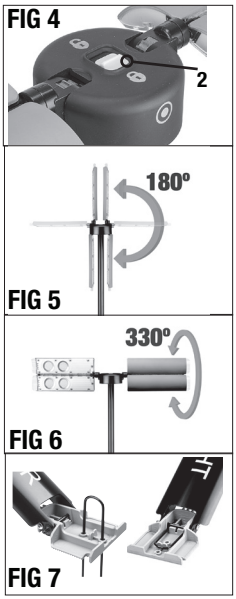

ACCESSORIES

Foot Spike (FIG 7)

Three foot spikes are included for extra hold in tough conditions. Hammer the foot spike into soft ground though two holes on the foot to give the light extra stability. The foot spike can be stored on the foot as shown in FIG 6.

Shoulder Strap:

An adjustable shoulder strap is Included for easy transport.

MAINTENANCE

Your work light requires very little care and maintenance. Simply clean the lens regularly with a non-abrasive cleaner. Use the similar care for the stand and tripod.

WARNING: Always make sure the work light is unplugged and completely cool before attempting to clean it.

WARRANTY

This product is warranted free from defects in material and workmanship for 2 (Two) years after date of purchase. This limited warranty does not cover normal wear and tear or damage from neglect or accident. The original purchaser is covered by this warranty and it is not transferable. Prior to returning your product to store location of purchase, please call the Toll-Free Help Line for possible solutions.

ACCESSORIES INCLUDED IN THIS PRODUCT ARE NOT COVERED BY THE 2 YEAR WARRANTY.

HELP LINE

For questions about this or any other **PowerSmith**™ product,

Please call Toll-Free: **888-552-8665**
Or visit our website: **www.powersmithproducts.com**

©Richpower Industries, Inc. All Rights reserved

Richpower Industries, Inc.
736 Hampton Road
Williamston, SC 29697

Printed in China, on recycled paper