COPYRIGHT © Hangzhou EZVIZ Software Co., Ltd. ALL RIGHTS RESERVED.
Any and all information, including, among others, wordings, pictures, graphs are the properties of Hangzhou EZVIZ Software Co., Ltd. (hereinafter referred to as “EZVIZ”). This user manual (hereinafter referred to as “the Manual”) cannot be reproduced, changed, translated, or distributed, partially or wholly, by any means, without the prior written permission of EZVIZ. Unless otherwise stipulated, EZVIZ does not make any warranties, guarantees or representations, express or implied, regarding to the Manual.

About this Manual

The Manual includes instructions for using and managing the product. Pictures, charts, images and all other information hereinafter are for description and explanation only. The information contained in the Manual is subject to change, without notice, due to firmware updates or other reasons. Please find the latest version in the EZVIZ™ website (http://www.ezvizlife.com).

Revision Record

New release – January, 2021

Trademarks Acknowledgement

EZVIZ™, ™, and other EZVIZ’s trademarks and logos are the properties of EZVIZ in various jurisdictions. Other trademarks and logos mentioned below are the properties of their respective owners.

Legal Disclaimer

TO THE MAXIMUM EXTENT PERMITTED BY APPLICABLE LAW, THE PRODUCT DESCRIBED, WITH ITS HARDWARE, SOFTWARE AND FIRMWARE, IS PROVIDED “AS IS”, WITH ALL FAULTS AND ERRORS, AND EZVIZ MAKES NO WARRANTIES, EXPRESS OR IMPLIED, INCLUDING WITHOUT LIMITATION, MERCHANTABILITY, SATISFACTORY QUALITY, FITNESS FOR A PARTICULAR PURPOSE, AND

NON-INFRINGEMENT OF THIRD PARTY. IN NO EVENT WILL EZVIZ, ITS DIRECTORS, OFFICERS, EMPLOYEES, OR AGENTS BE LIABLE TO YOU FOR ANY SPECIAL, CONSEQUENTIAL, INCIDENTAL, OR INDIRECT DAMAGES, INCLUDING, AMONG OTHERS, DAMAGES FOR LOSS OF BUSINESS PROFITS, BUSINESS INTERRUPTION, OR LOSS OF DATA OR DOCUMENTATION, IN CONNECTION WITH THE USE OF THIS PRODUCT, EVEN IF EZVIZ HAS BEEN ADVISED OF THE POSSIBILITY OF SUCH DAMAGES.

TO THE MAXIMUM EXTENT PERMITTED BY APPLICABLE LAW, IN NO EVENT SHALL EZVIZ’S TOTAL LIABILITY FOR ALL DAMAGES EXCEED THE ORIGINAL PURCHASE PRICE OF THE PRODUCT.

EZVIZ DOES NOT UNDERTAKE ANY LIABILITY FOR PERSONAL INJURY OR PROPERTY DAMAGE AS THE RESULT OF PRODUCT INTERRUPTION OR SERVICE TERMINATION CAUSED BY: A) IMPROPER INSTALLATION OR USAGE OTHER THAN AS REQUESTED; B) THE PROTECTION OF NATIONAL OR PUBLIC INTERESTS; C) FORCE MAJEURE; D) YOURSELF OR THE THIRD PARTY, INCLUDING WITHOUT LIMITATION, USING ANY THIRD PARTY'S PRODUCTS, SOFTWARE, APPLICATIONS, AND AMONG OTHERS.

REGARDING TO THE PRODUCT WITH INTERNET ACCESS, THE USE OF PRODUCT SHALL BE WHOLLY AT YOUR OWN RISKS. EZVIZ SHALL NOT TAKE ANY RESPONSIBILITES FOR ABNORMAL OPERATION, PRIVACY LEAKAGE OR OTHER DAMAGES RESULTING FROM CYBER ATTACK, HACKER ATTACK, VIRUS INSPECTION, OR OTHER INTERNET SECURITY RISKS; HOWEVER, EZVIZ WILL PROVIDE TIMELY TECHNICAL SUPPORT IF REQUIRED. SURVEILLANCE LAWS AND DATA PROTECTION LAWS VARY BY JURISDICTION.

Basics

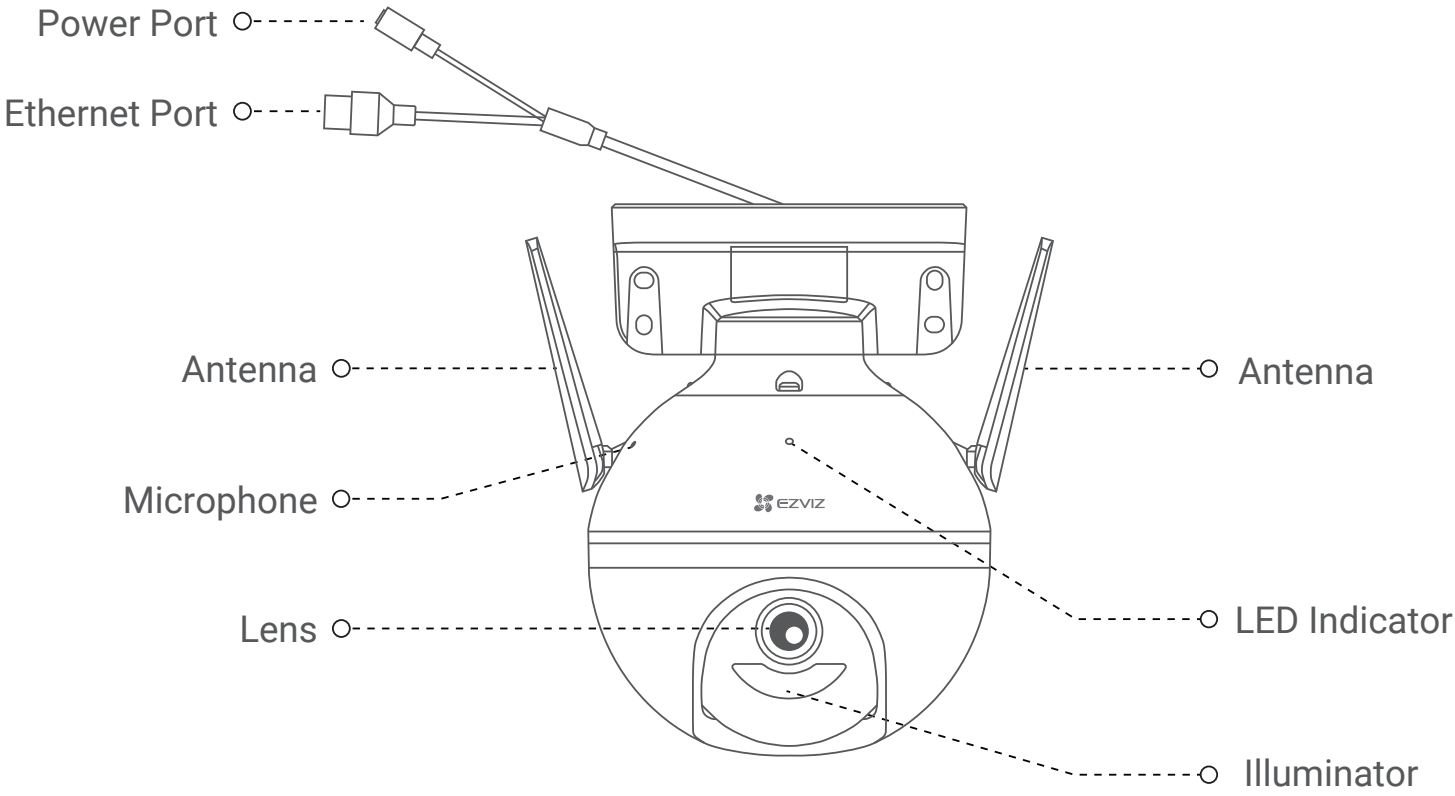

Name	Description
LED Indicator	• Solid Red: Camera starting up. • Slow-flashing Red: Wi-Fi connection failed. • Fast-flashing Red: Camera exception (e.g. Micro SD card error). • Fast-flashing Blue: Camera ready for Wi-Fi connection. • Slow-flashing Blue: Camera running properly. • Solid Blue: App visiting camera.

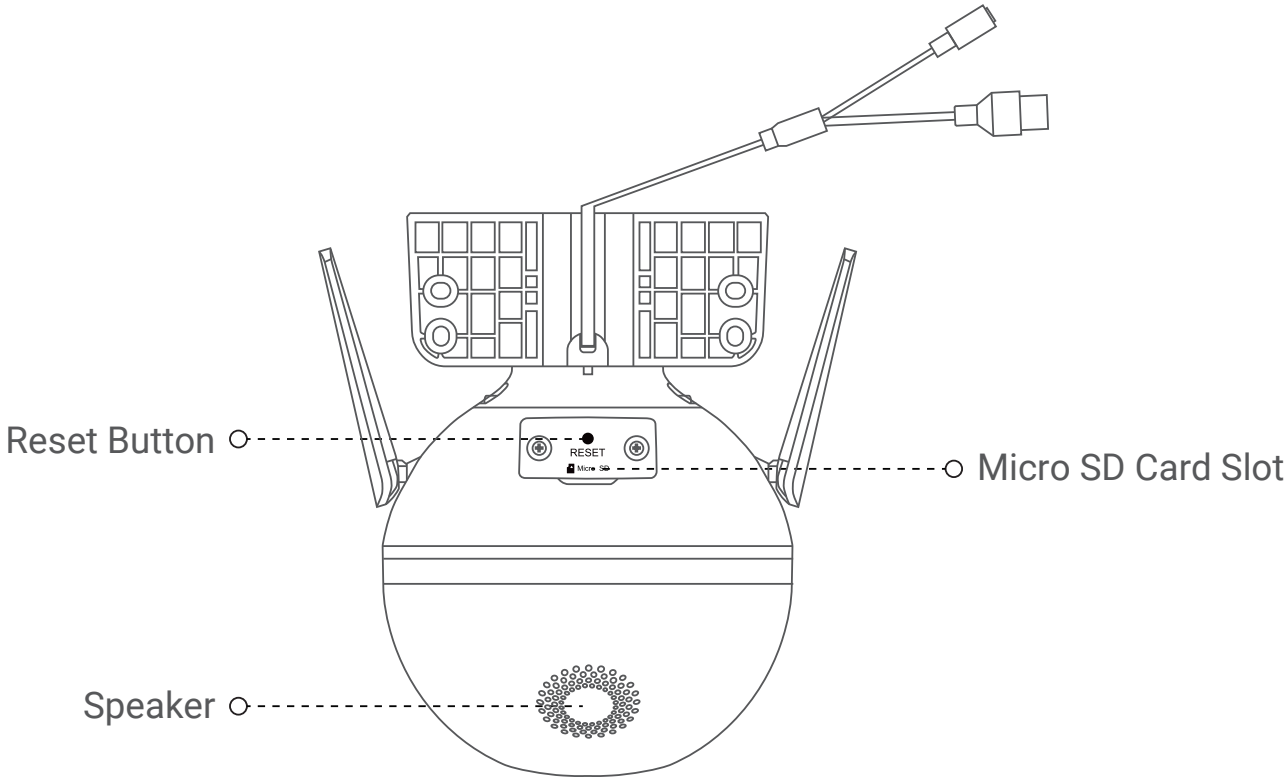

Name	Description
Micro SD Card (sold separately)	Initialize the card in the EZVIZ app before using it.
Reset Button	Press and hold for 5s to restart the cameara and all parameters will be restored to default settings.
MIC	Converts sound into an electrical signal.
Speaker	Converts an electrical audio signal into a corresponding sound.

Connect to Power Source

Connect the camera to the power source. Indicator flashing rapidly blue means that the camera has started up.

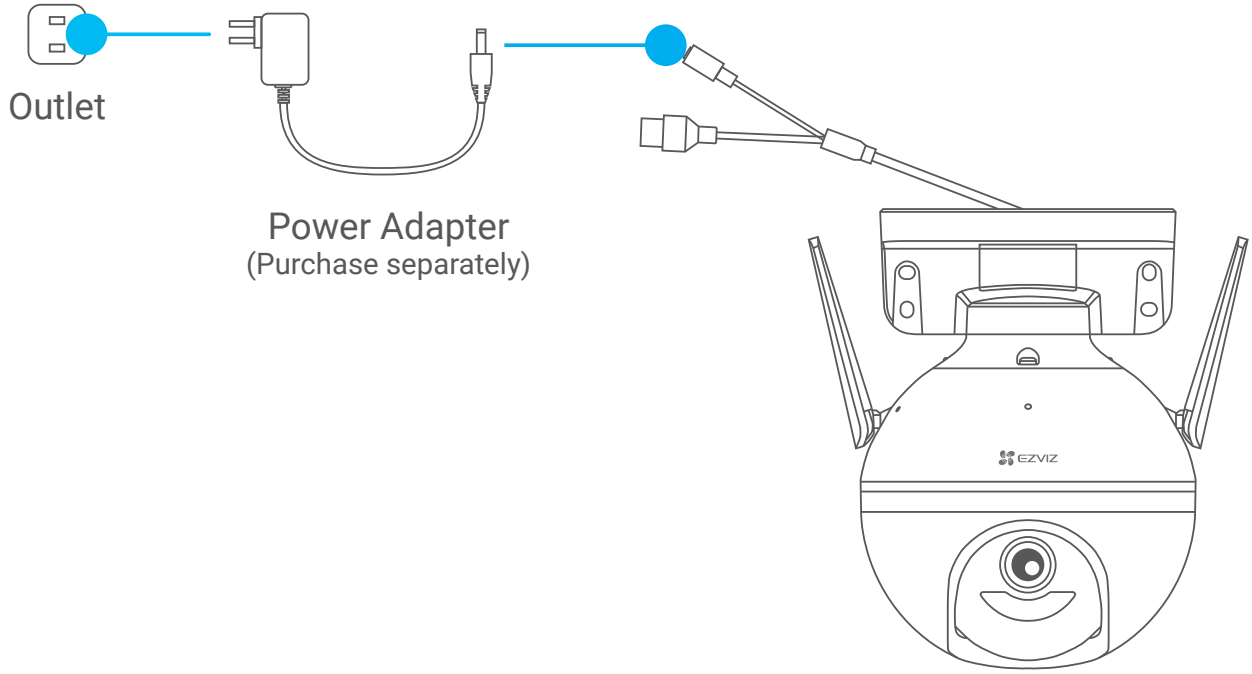

Wring

You can connect the camera to the internet through wireless connection or wired connection.

Wireless Connection

1. Create a user account

--Connect your mobile phone to Wi-Fi using your 2.4GHz network.
--Search for "EZVIZ" in the App Store or Google Play Store™ .
--Download and install the EZVIZ app.
--Launch the app.
--Create and register an EZVIZ user account by following the start-up wizard.

2. Add a camera to EZVIZ

--Log in to your account using the EZVIZ app.
--On the Home screen, tap “+” on the upper-right corner to go to the Scan QRCode interface.

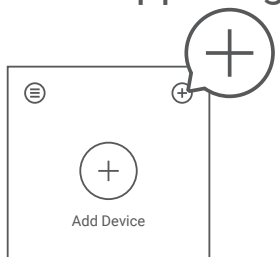

--Scan the QR code on the bottom of the camera.

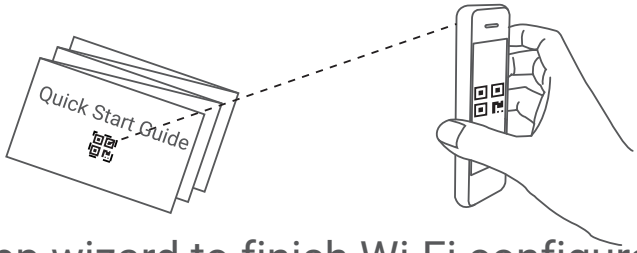

--Follow the EZVIZ app wizard to finish Wi-Fi configuration.

Hold the Reset button for 5s in any of the following cases:
• The camera fails to connect to your Wi-Fi network.
• You want to select another Wi-Fi network.

Wired Connection

1. Connect the camera to the router with network cable (purchase separately).

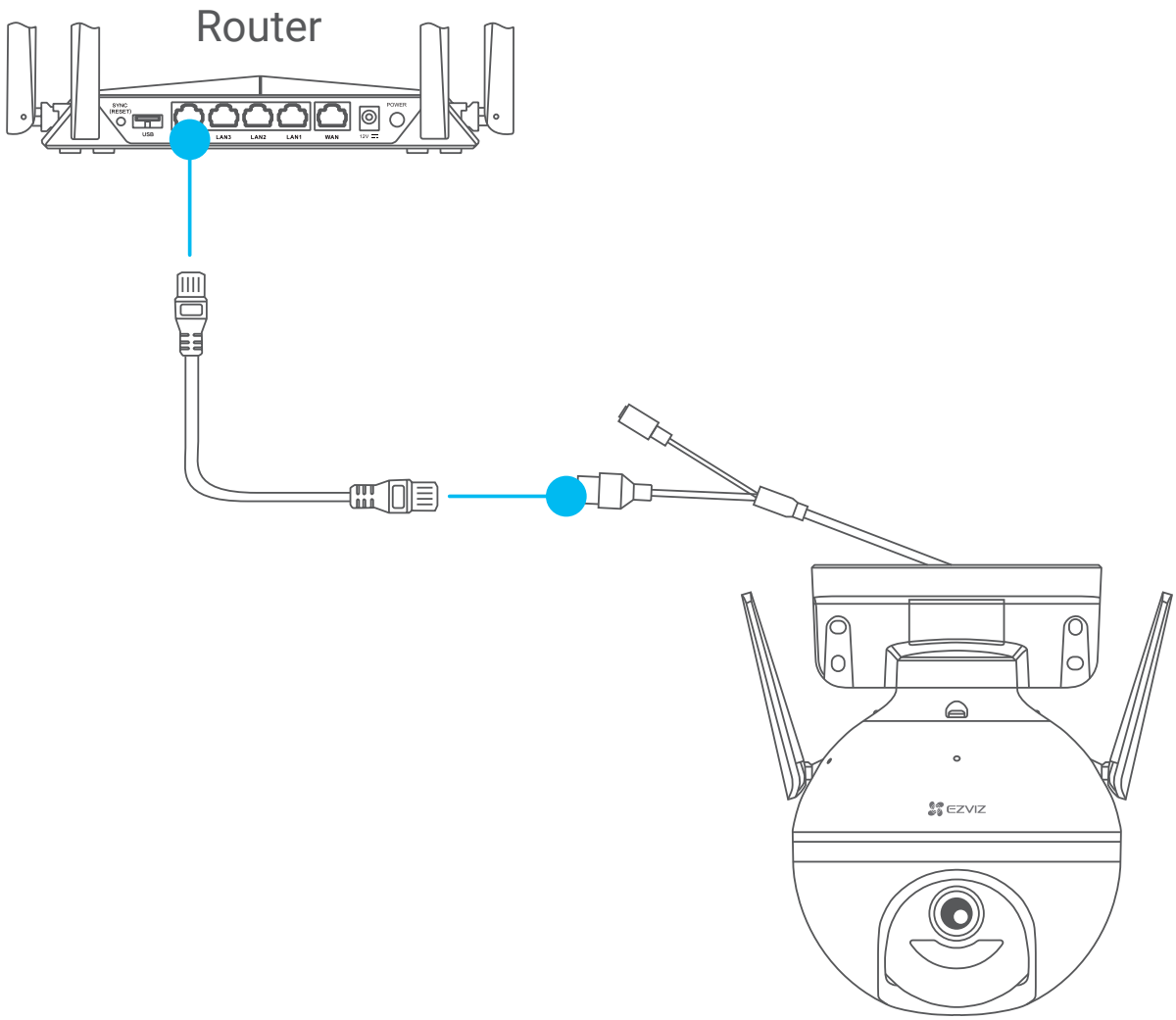

2. Log in to your account using EZVIZ app.

3 On the Home screen, tap “+” on the upper-right corner to go to the Scan QR Code interface.

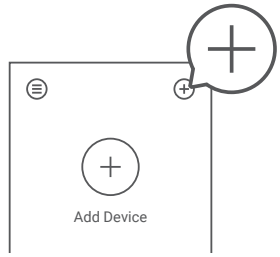

4 Scan the QR code on the bottom of the camera or on the cover of the Quick Start Guide.

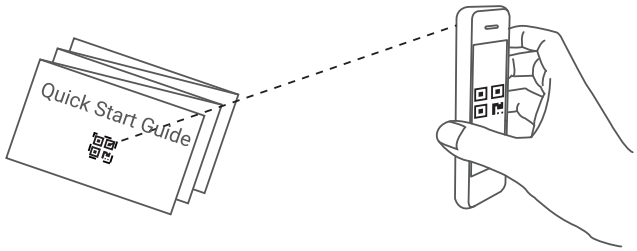

5 Follow the EZVIZ app wizard to add your camera to the EZVIZ account.

Installation

- Make sure the wall is strong enough to hold three times the weight of the camera.
- Camera working temperature: -30°C— 60°C.
- Do not aim the camera lens at strong light such as sun or incandescent lamp. The strong light can cause fatal damage to the camera.

1 Insert Micro SD Card（Optional）

Remove the SD card slot cover using screw driver. Insert Micro SD card, and then initialize the card on the EZVIZ app.

1. Rotate the camera counterclockwise as shown below

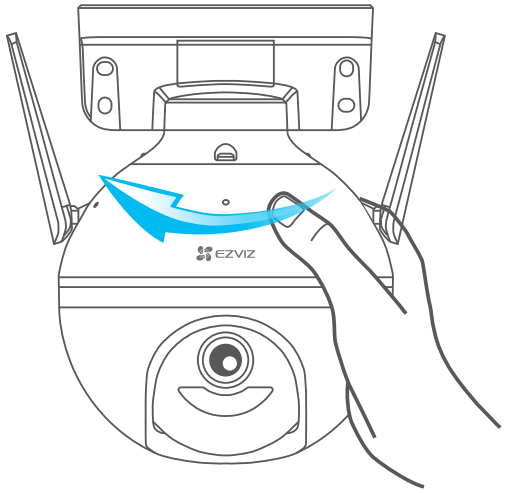

2. Insert Micro SD Card

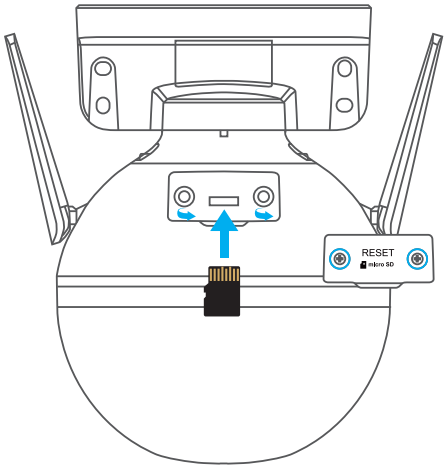

2 Install Camera

The camera can be installed on the ceiling, on the wall, or on the pole.

Ceiling Mounted

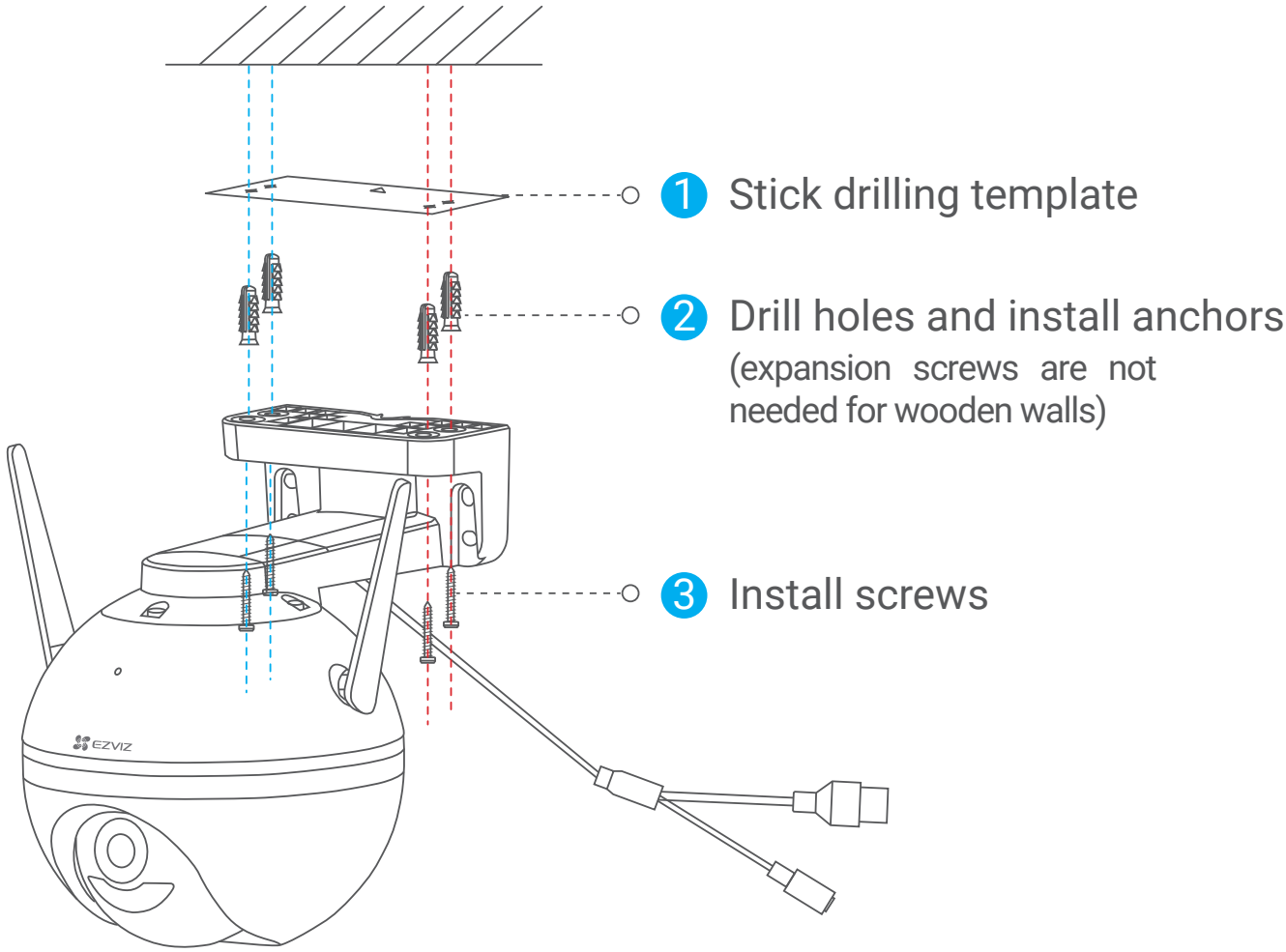

Wall Mounted

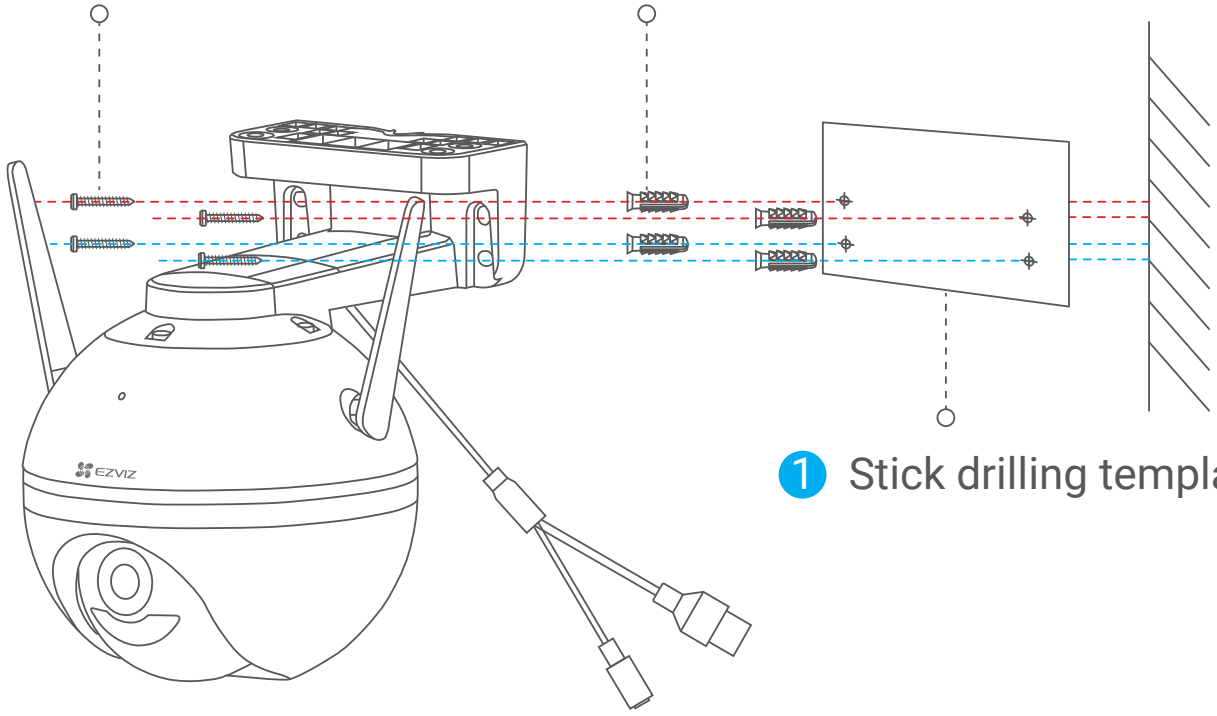

Pole Mounted

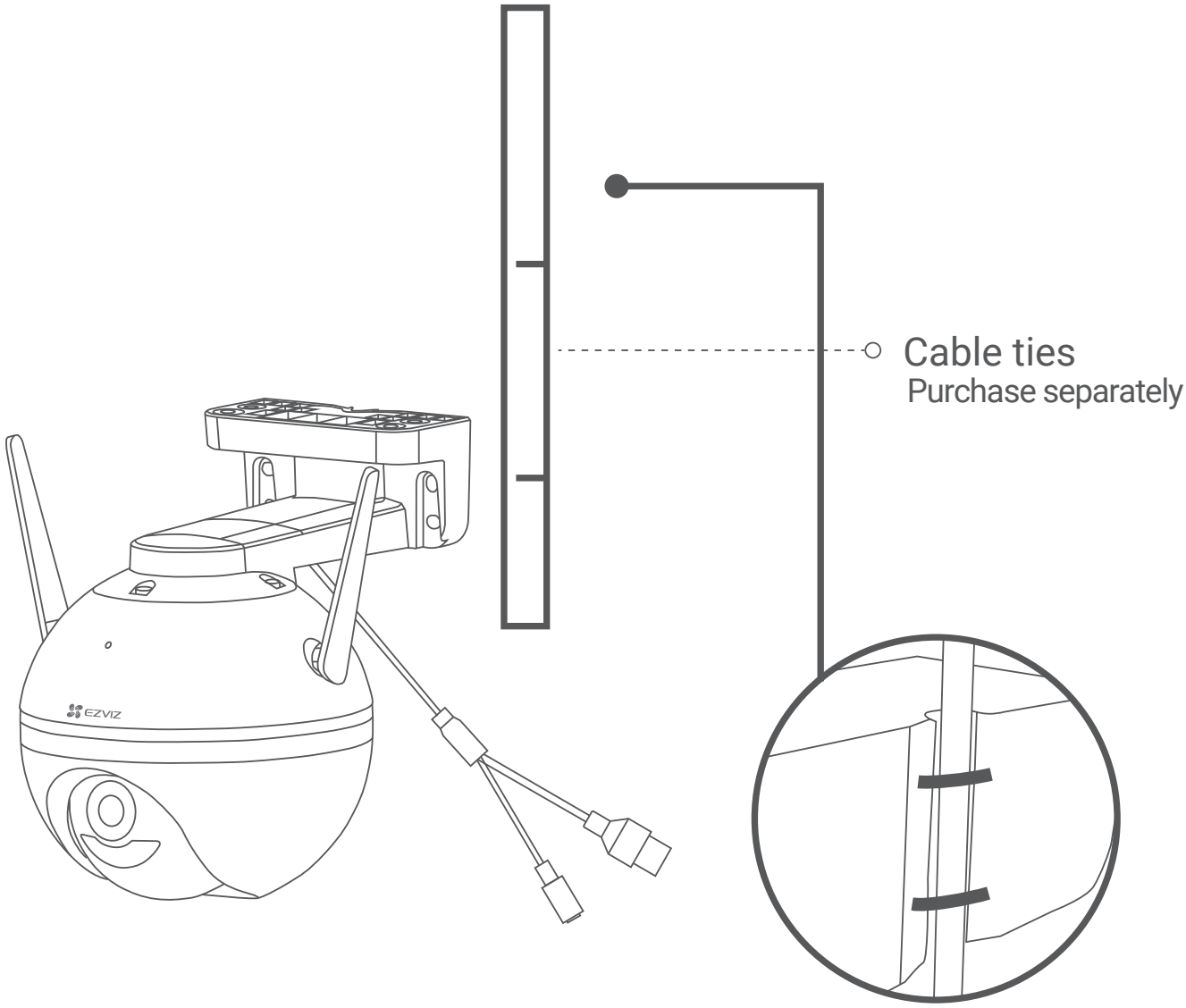

For detailed information, please visit www.ezviz.eu.

Box Content

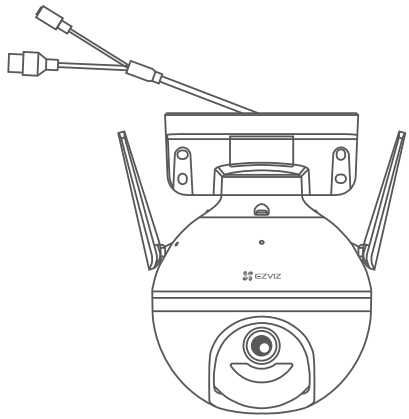

Camera

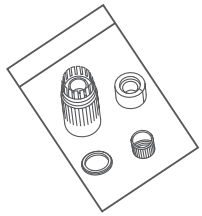

Waterproof Kit

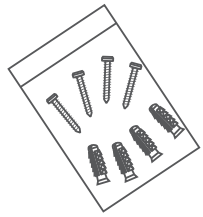

Screw Kit

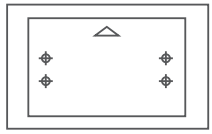

Drilling Template

Quick Start Guide

Regulatory Information

This product and - if applicable - the supplied accessories too are marked with "CE" and comply therefore with the applicable harmonized European standards listed under the Radio Equipment Directive 2014/53/EU, the EMC Directive 2014/30/EU, the RoHS Directive 2011/65/EU.

2012/19/EU (WEEE directive): Products marked with this symbol cannot be disposed of as unsorted municipal waste in the European Union. For proper recycling, return this product to your local supplier upon the purchase of equivalent new equipment, or dispose of it at designated collection points. For more information see: www.recyclethis.info

2006/66/EC and its amendment 2013/56/EU (battery directive): This product contains a battery that cannot be disposed of as unsorted municipal waste in the European Union. See the product documentation for specific battery information. The battery is marked with this symbol, which may include lettering to indicate cadmium (Cd), lead (Pb), or mercury (Hg). For proper recycling, return the battery to your supplier or to a designated collection point. For more information see: www.recyclethis.info

EC DECLARATION OF CONFORMITY

Hereby, Hangzhou EZVIZ Software Co., Ltd. declares that the radio equipment type [CS-C1C, CS-C1HC, CS-C1T, CS-C2C, CS-CV206, CS-CV310, CS-C3N, CS-C3W, CS-C3WN, CS-C3X, CS-C6N, CS-CV246, CS-CV248, CS-C6CN, CS-C6C, CS-C6W, CS-TY1, CS-TY2, CS-TY3, CS-CV336, CS-DP1, CS-DP1C, CS-DP2C, CS-DB2C, CS-C4W, CS-C4C, CS-CV228, CS-C5W, CS-C5C, CS-C5HC, CS-C5X, CS-C5HX, CS-C8W, CS-C8C, CS-CP1, CS-C3A, CS-BC1, CS-BC1-B1, CS-BC1-B2, CS-BC1-B3, CS-BC1-B4, CS-BC1C, CS-W2H, CS-X5S-4W, CS-X5S-8W, CS-A1-32W, CS-T9-A, CS-T4-A] is in compliance with Directive 2014/53/EU.
The full text of the EC DECLARATION OF CONFORMITY is available at the following web link:
http://www.ezvizlife.com/declaration-of-conformity.

Use only power supplies listed in the Table.

Equipment model	Adapter manufacture	Adapter model
CS-C1C/ CS-C1HC/ CS-C1T/ CS-C2C/ CS-CV206/ CS-CV246/CS-C6N/ CS-C6CN/ CS-C6C/ CS-TY1/ CS-TY2/ CS-TY3/ CS-W2D/ CS-A1-32W/ CS-T9-A/ CS-BC1C/ CS-CP1	Shenzhen Honor Electronic Co Ltd	ADS-5RE-06 05050EPCU/EPC(US), ADS-5RH-06 05050EPB(UK), ADS-5RH-06 05050EPG(EU), ADS-5RH-06 05050EPSA(AU), ADS-5RH-06 05050EPBR(BR), ADS-5RH-06 05050EPI(IN), ADS-5MA-06A 05050GPK(KR)
	Sichuan Jiuzhou Electronic Technology Co., Ltd	DYS05100CP-U, DYS05100CP-E
CS-CV248/ CS-C6W/ CS-C6Wi/ CS-CV336/ CS-DP1/ CS-DP1C/ CS-DP2C/ CS-C3A/ CS-BC1/ CS-CP1	Shenzhen Honor Electronic Co Ltd	ADS-10LA-06 05010EPCU/EPC(US), ADS-10RH-06 05010EPB (UK), ADS-10RH-06 05010EPG(EU), ADS-10RH-06 05010EPSA(SA), ADS-10RH-06 05010EPBR(BR), ADS-10RH-06 05010EPI(IN), ADS-12CG-06 05010EPC(JP)
	Sichuan Jiuzhou Electronic Technology Co., Ltd	DYS05200CQ-U, DYS05200CQ-E
CS-CV310/ CS-C3N/ CS-C3W/ CS-C3WN/ CS-C3X/ CS-SD1/ CS-C4W/ CS-C4C/ CS-CV228/ CS-C8W/ CS-C8C/ CS-W2H/ CS-W3C-WD1200G/ CS-T8-B	Shenzhen Honor Electronic Co Ltd	ADS-12FG-12N 12012EPCU(US), ADS-12FG-12N 12012EPB(UK), ADS-12FG-12N 12012EPG(EU), ADS-12FB-12 12012EPSA(AU), ADS-12FG-12N 12012EPBR(BR), ADS-12FG-12N 12012EPI(IN)
CS-X5S-4W/ CS-X5S-8W/ CS-X5S-16H	Moso Power Supply Technology Co. Ltd	MSA-C1500IC12.0-18P-GB(UK), MSA-C1500IC12.0-18P-DE, MSA-C1500IC12.0-18P-AU(AU), MSA-C1500IC12.0-18P-BR(BR), ADS-25FSG-12 12018GPI(IN)

Important Safety Information

Note: Please read the manual before using the device.

This symbol on the device indicates that the safety compatibility manual and / or installation manual must be read, which contains information related to the safe operation of the device.
Caution: Be sure to read these instructions before operating the equipment.

This symbol on the device indicates that the surface or component is overheating. If you touch this surface, you may cause personal injury.
Warning: To reduce the risk of personal injury due to overheating of the components, wait until the surface cools down before touching it.

Warning: The separate earthing terminal must be permanently connected to earth.
Warning: For SELV DC input: the DC power source shall comply with the Safety Extra-Low Voltage (SELV) requirements of IEC 60950-1.

Caution: Do not block ventilation openings while the system is on, and keep at least 2 cm distance from ventilation openings and walls or other things which may block the openings.
Warning: Disposal of a battery into fire or a hot oven, or mechanically crushing or cutting of a battery that can result in an explosion.
Warning: Leaving a battery in an extremely high temperature surrounding environment that can result in an explosion or the leakage of flammable liquid or gas.
Warning: A battery subjected to extremely low air pressure that may result in an explosion or the leakage of flammable liquid or gas.
Warning: Dispose of used batteries according to the instructions.
Warning: Replace only with the same or equivalent type recommended by the manufacturer.
Caution: THE PRODUCT IS BUILT IN A REPLACEABLE BATTERY.
Warning: Do not ingest battery, Chemical Burn Hazard.
Caution: This product contains a coin/button cell battery. If the coin / button cell battery is swallowed, it can cause severe internal burns in just 2 hours and can lead to death.
Caution: Keep new and used batteries away from children.
Caution: If the battery compartment does not close securely, stop using the product and keep it away from children.
Caution: If you think batteries might have been swallowed or placed inside any part of the body, seek immediate medical attention.
Caution: Risk of fire or explosion if the battery is replaced by an incorrect type.

FCC Information

Please take attention that changes or modification not expressly approved by the party responsible for compliance could void the user's authority to operate the equipment.

FCC compliance

This equipment has been tested and found to comply with the limits for a Class B digital device, pursuant to part 15 of the FCC Rules. These limits are designed to provide reasonable protection against harmful interference in a residential installation. This equipment generates, uses and can radiate radio frequency energy and, if not installed and used in accordance with the instructions, may cause harmful interference to radio communications. However, there is no guarantee that interference will not occur in a particular installation. If this equipment does cause harmful interference to radio or television reception, which can be determined by turning the equipment off and on, the user is encouraged to try to correct the interference by one or more of the following measures:

—Reorient or relocate the receiving antenna.

—Increase the separation between the equipment and receiver.

—Connect the equipment into an outlet on a circuit different from that to which the receiver is connected.

—Consult the dealer or an experienced radio/TV technician for help.

This equipment should be installed and operated with a minimum distance 20cm between the radiator and your body.

FCC Conditions

This device complies with part 15 of the FCC Rules. Operation is subject to the following two conditions:

1. This device may not cause harmful interference.
2. This device must accept any interference received, including interference that may cause undesired operation.

Industry Canada ICES-003 Compliance

This device meets the CAN ICES-3 (B)/NMB-3(B) standards requirements.

This device complies with Industry Canada licence-exempt RSS standard(s). Operation is subject to the following two conditions:

(1) this device may not cause interference, and

(2) this device must accept any interference, including interference that may cause undesired operation of the device.

Under Industry Canada regulations, this radio transmitter may only operate using an antenna of a type and maximum (or lesser) gain approved for the transmitter by Industry Canada. To reduce potential radio interference to other users, the antenna type and its gain should be so chosen that the equivalent isotropically radiated power (e.i.r.p.) is not more than that necessary for successful communication.

This equipment should be installed and operated with a minimum distance 20cm between the radiator and your body.

Le présent appareil est conforme aux CNR d'Industrie Canada applicables aux appareils radioexempts de licence. L'exploitation est autorisée aux deux conditions suivantes :

(1) l'appareil ne doit pas produire de brouillage, et

(2) l'utilisateur de l'appareil doit accepter tout brouillage radioélectrique subi, même si le brouillage est susceptible d'en compromettre le fonctionnement.

Conformément à la réglementation d'Industrie Canada, le présent émetteur radio peut
fonctionner avec une antenne d'un type et d'un gain maximal (ou inférieur) approuvé pour l'émetteur par Industrie Canada. Dans le but de réduire les risques de brouillage radioélectrique à l'intention des autres utilisateurs, il faut choisir le type d'antenne et son gain de sorte que la puissance isotrope rayonnée équivalente (p.i.r.e.) ne dépasse pas l'intensité nécessaire à l'établissement d'une communication satisfaisante.

Cet équipement doit être installé et utilisé à une distance minimale de 20 cm entre le radiateur et votre corps.

IFETEL Information

La operación de este equipo está sujeta a las siguientes dos condiciones:

(1) es posible que este equipo o dispositivo no cause interferencia perjudicialy

(2) este equipo o dispositivo debe aceptar cualquier interferencia, incluyendo la que pueda causar su operación no deseada.

EZVIZ™