COPYRIGHT © Hangzhou EZVIZ Software Co., Ltd.. ALL RIGHTS RESERVED.
Any and all information, including, among others, wordings, pictures, graphs are the properties of Hangzhou EZVIZ Software Co., Ltd. (hereinafter referred to as “EZVIZ”). This user manual (hereinafter referred to as “the Manual”) cannot be reproduced, changed, translated, or distributed, partially or wholly, by any means, without the prior written permission of EZVIZ. Unless otherwise stipulated, EZVIZ does not make any warranties, guarantees or representations, express or implied, regarding to the Manual.

About this Manual

The Manual includes instructions for using and managing the product. Pictures, charts, images and all other information hereinafter are for description and explanation only. The information contained in the Manual is subject to change, without notice, due to firmware updates or other reasons. Please find the latest version in the EZVIZ ™ website (http://www.ezvizlife.com).

Revision Record

New release – May, 2022

Trademarks Acknowledgement

EZVIZ ™, ™, and other EZVIZ’s trademarks and logos are the properties of EZVIZ in various jurisdictions. Other trademarks and logos mentioned below are the properties of their respective owners.

Legal Disclaimer

TO THE MAXIMUM EXTENT PERMITTED BY APPLICABLE LAW, THE PRODUCT DESCRIBED, WITH ITS HARDWARE, SOFTWARE AND FIRMWARE, IS PROVIDED “AS IS”, WITH ALL FAULTS AND ERRORS, AND EZVIZ MAKES NO WARRANTIES, EXPRESS OR IMPLIED, INCLUDING WITHOUT LIMITATION, MERCHANTABILITY, SATISFACTORY QUALITY, FITNESS FOR A PARTICULAR PURPOSE, AND NON-INFRINGEMENT OF THIRD PARTY. IN NO EVENT WILL EZVIZ, ITS DIRECTORS, OFFICERS, EMPLOYEES, OR AGENTS BE LIABLE TO YOU FOR ANY SPECIAL, CONSEQUENTIAL, INCIDENTAL, OR INDIRECT DAMAGES, INCLUDING, AMONG OTHERS, DAMAGES FOR LOSS OF BUSINESS PROFITS, BUSINESS INTERRUPTION, OR LOSS OF DATA OR DOCUMENTATION, IN CONNECTION WITH THE USE OF THIS PRODUCT, EVEN IF EZVIZ HAS BEEN ADVISED OF THE POSSIBILITY OF SUCH DAMAGES.

TO THE MAXIMUM EXTENT PERMITTED BY APPLICABLE LAW, IN NO EVENT SHALL EZVIZ’S TOTAL LIABILITY FOR ALL DAMAGES EXCEED THE ORIGINAL PURCHASE PRICE OF THE PRODUCT.

EZVIZ DOES NOT UNDERTAKE ANY LIABILITY FOR PERSONAL INJURY OR PROPERTY DAMAGE AS THE RESULT OF PRODUCT INTERRUPTION OR SERVICE TERMINATION CAUSED BY: A) IMPROPER INSTALLATION OR USAGE OTHER THAN AS REQUESTED; B) THE PROTECTION OF NATIONAL OR PUBLIC INTERESTS; C) FORCE MAJEURE; D) YOURSELF OR THE THIRD PARTY, INCLUDING WITHOUT LIMITATION, USING ANY THIRD PARTY’S PRODUCTS, SOFTWARE, APPLICATIONS, AND AMONG OTHERS.

REGARDING TO THE PRODUCT WITH INTERNET ACCESS, THE USE OF PRODUCT SHALL BE WHOLLY AT YOUR OWN RISKS. EZVIZ SHALL NOT TAKE ANY RESPONSIBILITES FOR ABNORMAL OPERATION, PRIVACY LEAKAGE OR OTHER DAMAGES RESULTING FROM CYBER ATTACK, HACKER ATTACK, VIRUS INSPECTION, OR OTHER INTERNET SECURITY RISKS; HOWEVER, EZVIZ WILL PROVIDE TIMELY TECHNICAL SUPPORT IF REQUIRED. SURVEILLANCE LAWS AND DATA PROTECTION LAWS VARY BY JURISDICTION. PLEASE CHECK ALL RELEVANT LAWS IN YOUR JURISDICTION BEFORE USING THIS PRODUCT IN ORDER TO ENSURE THAT YOUR USE CONFORMS TO THE APPLICABLE LAW. EZVIZ SHALL NOT BE LIABLE IN THE EVENT THAT THIS PRODUCT IS USED WITH ILLEGITIMATE PURPOSES.

IN THE EVENT OF ANY CONFLICTS BETWEEN THE ABOVE AND THE APPLICABLE LAW, THE LATTER PREVAILS.

Table of Contents

Overview 1

1. Package Contents 1
2. Basics 1

Setup 2

1. Power-on 2
2. Connect to the Internet 2

Installation 3

1. Use Micro SD Card (Optional) 3
2. Install the Base 4
3. Install the Camera 4

View Your Device 5

1. Live View 5
2. Settings 6

EZVIZ Connect 7

1. Use Amazon Alexa 7
2. Use Google Assistant 7

FAQ 8

Overview

1. Package Contents

Camera (x1)

Power Adapter (x1)

Power Cable (x1)

Drill Template (x1)

Mounting Plate (x1)

Screw Kit (x1)

Regulatory Information (x1)

Quick Start Guide (x1)

The power adapter's appearance is subject to the actual one you have bought.

2. Basics

Front View

Name	Description
LED Indicator	Solid Red: Camera starting up.
	Slow-flashing Red: Network exception.
	Fast-flashing Red: Camera exception (e.g. Micro SD card error).
	Solid Blue: Video being viewed in the EZVIZ app.
	Slow-flashing Blue: Camera running properly.
	Fast-flashing Blue: Camera ready for Wi-Fi connection.

Back View

Name	Description
Micro SD Card (sold separately)	Initialize the card in the EZVIZ app before using it.
Reset Button	Hold for 5 seconds to restart and set all parameters to default.

Setup

1. Power-on

Plug the power cable into the camera, and then plug the power adapter into an outlet as shown in the figure below.

2. Connect to the Internet

1. Get the EZVIZ App

- Connect your mobile phone to Wi-Fi (suggested).
- Download and install the EZVIZ app by searching “EZVIZ” in the App Store or Google Play™.
- Launch the app and register an EZVIZ user account.

EZVIZ App	
Download on the App Store	GET IT ON Google Play

If you have already used the app, please make sure that it is the latest version. To find out if an update is available, go to the app store and search for EZVIZ.

2. Add camera to EZVIZ

- Hold the reset button for 5s. When the LED indicator flashes blue quickly, indicates that the camera is ready for Wi-Fi configuration.

- Log in to your EZVIZ user account.
- On the Home screen, tap “+” on the upper-right corner to go to the Scan QR Code interface.
- Scan the QR code on the Quick Start Guide cover or on the body of the camera.

- Follow the EZVIZ app wizard to finish Wi-Fi configuration.

If you want to change your camera's Wi-Fi, press and hold the reset button for 5s and repeat the steps above.

Installation

1. Use Micro SD Card (Optional)

1. Insert Micro SD Card

- Rotate the sphere upwards until you see the card slot.
- Insert the Micro SD card (sold separately) into the card slot as shown in the figure below.

2. Install the Base

The camera can be placed horizontally or mounted on the ceiling. Here we take ceiling mounting as an example.

- Please install the device indoor as the device is not waterproof.
- Make sure the ceiling is strong enough to withstand three times the weight of the camera.
- Avoid positioning the camera in an area that gets a lot of light shining directly into the camera lens.
- Recommended mounting height: 3 meters above the ground.

- Place the drill template onto the surface you have chosen to mount the camera.
- (For cement wall/ceiling only) Drill screw holes according to the template, and insert three anchors.
- Use three metal screws to fix the camera base.

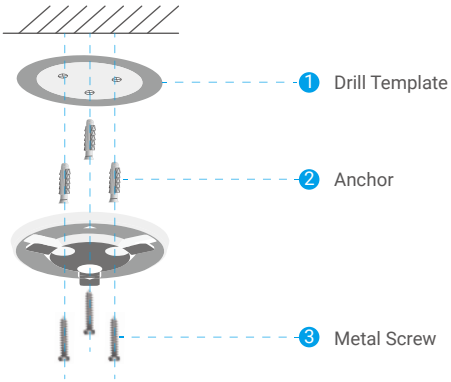

3. Install the Camera

Mount the camera to the base, and turn it clockwise until it is fixed.

View Your Device

The app interface may be different due to version update, and the interface of the app you installed on your phone shall prevail.

1. Live View

When you launch the EZVIZ app, the device page displays as shown below.
You can view and listen to a live feed, take snapshots or recordings, and choose video definition as needed.

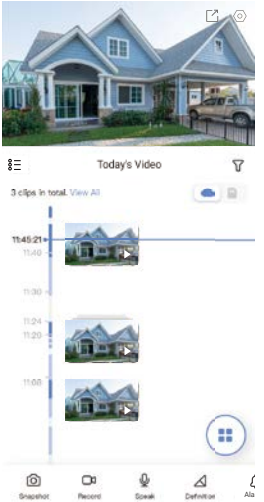

Swipe left and right across the screen to see more icons.

Icon	Description
	Share. Share your device.
	Settings. View or change the device settings.
	Snapshot. Take a snapshot.
	Record. Manually start/stop recording.
	Definition. Select video resolution from Full HD, Ultra HD or Hi-Def.
	Pan/Tilt/Zoom. Rotate the camera to get broader field of view.
	Talk. Tap the icon, and then follow the on-screen instructions to talk to or listen to people in front of the camera.
	360° Picture. Tap to generate a 360 degree view picture.
	Privacy Mode. Enable to hide the screen display.
	Multi-screen Live. Tap to select window layouts.

Please refer to the actual interface for specific information.

2. Settings

In the settings page, you can set the parameters of the device.

Parameter	Description
Intelligent Detection	You can select a detection type and set detection sensitivity and detection zones here.
Audible Notification	You can select warning tones between Mute, Intensive, Soft or even custom the warning tone.
Message Notification	When enabled, you can review the events from device in Library tab.
Offline Notification	If enabled, notifications will be pushed to your app once the device is offline.
Audio	When disabled, both live view and recorded videos will not have audio.
OSD	When enabled, OSD with the device name will be displayed on all videos captured by the camera.
Flip Image	Tap to flip images.
Device Sleep Mode	When sleep mode is on, the device stops monitoring and recording.
Camera Status Light	If enabled, the LED indicator on the camera will be on; otherwise the LED indicator will not be on.
Auto Zoom Tracking	If enabled, when someone appears, the camera will follow the movement with fixed view. Zooming and focusing is supported only under Full HD.
Tracking View	You can choose whether the lens rotate or not when tracking.
PTZ Position Calibration	You can calibrate the camera when there is an offset for PTZ preset position or rotating position in the 360°Picture.
360° Picture	Tap to generate a 360 degree view picture.
Record List	You can see micro SD card capacity, used space and free space here, and also you can enable or disable cloud storage service here.
Video Encryption	If enabled, images captured by the camera can only be avaliable after you enter a password.
Change Encryption Password	You can change encryption password here.
Network	Make your device offiline first, and then you can connect your device to a new network.
Space	You can place the device into any one of the spaces.
Time Zone	You can select time zone as needed here.
Time Format	You can select date format as needed here.
User Guide	You can read user guide of the camera here.
Device Version	You can see device version here.
Share the device	You can share the device to you family member or guest.
Restart the device	Tap to restart the camera.
Delete Device	Tap to delete the camera from EZVIZ cloud. After you have deleted the camera, videos stored in the cloud will not be deleted. Once you add the camera again, the videos can still be viewed.

i For privacy protection, please remove SD card or other storage media(if any)when transferring the device to others.

EZVIZ Connect

1. Use Amazon Alexa

These instructions will enable you to control your EZVIZ devices with Amazon Alexa. If you run into any difficulties during the process, please refer to **Troubleshooting**.

Before you start, make sure that:

1. EZVIZ devices are connected to the EZVIZ app.
2. In the EZVIZ app, turn off the "Image Encryption" in the Device Settings page.
3. You have an Alexa-enabled device (i.e Echo Spot, Echo-Show, All-new Echo-Show, Fire TV (all generations), Fire TV stick (second generation only), or Fire TV Edition smart TVs).
4. The Amazon Alexa app is already installed on your smart device, and you have created an account.

To Control EZVIZ devices with Amazon Alexa:

1. Open the Alexa app and select "Skills and Games" from the menu.
2. On the Skills and Games screen, search for "EZVIZ", and you will find "EZVIZ" skills.
3. Select your EZVIZ device's skill, then tap **ENABLE TO USE**.
4. Enter your EZVIZ username and password, and tap **Sign in**.
5. Tap the **Authorize** button to authorize Alexa to access your EZVIZ account, so that Alexa can control your EZVIZ devices.
6. You will see "EZVIZ has been successfully linked", then tap **DISCOVER DEVICES** to allow Alexa to discover all your EZVIZ devices.
7. Go back to Alexa app menu and select "Devices", and under devices you will see all your EZVIZ devices.

Voice Command

Discover a new smart device via the "Smart Home" menu in the Alexa app or the Alexa Voice Control function.
Once the device is found, you can control it with your voice. Speak simple commands to Alexa.

Your device's name for example: "show xxxx camera," can be modified in the EZVIZ app. Every time you change the name of the device, you will need to discover the device again to update the name.

Troubleshooting

What do I do if Alexa fails to discover my device?

Check if there are any Internet connecting problems.
Try to reboot the smart device and re-discover the device on Alexa.

Why does the device's status show "Offline" on Alexa?

Your wireless connection might have been disconnected. Reboot the smart device and re-discover on Alexa.
Internet access on your router could be unavailable. Check if your router is connected to the Internet and try again.

For details about countries that support the using of Amazon Alexa, see its official website.

2. Use Google Assistant

With the Google Assistant, you can activate your EZVIZ device and watch live by speaking Google Assistant voice commands.

The following devices and apps are required:

1. A functional EZVIZ app.
2. In the EZVIZ app, turn off the "Image Encryption" and turn on the "Audio" in the Device Settings page.
3. A TV with functional Chromecast connecting to it.
4. The Google Assistant app on your phone.

To get started, follow the steps below:

1. Set up the EZVIZ device and make sure it works properly on the app.
2. Download the Google Home app from the App Store or Google Play Store™ and log into your Google account.
3. On the Myhome screen, tap “+” on the upper-left corner, and select "Set up device" from the menu list to go to the Set up interface.
4. Tap **Works with Google**, and search for "EZVIZ", where you will find "EZVIZ" skills.
5. Enter your EZVIZ username and password, and tap **Sign in**.

6. Tap the **Authorize** button to authorize Google to access your EZVIZ account, so that Google can control your EZVIZ devices.
7. Tap **Return to app**.
8. Follow the above steps to complete the authorization. When synchronization is completed, EZVIZ service will be listed under your list of services. To see a list of compatible devices under your EZVIZ account, tap on the EZVIZ service icon.
9. Now try some commands. Use the name of the camera that you created when you set up the system.

Users can manage devices as a single entity or in a group. Adding devices to a room allows users to control a group of devices at the same time using one command.
See the link for more information:
https://support.google.com/googlehome/answer/7029485?co=GENIE.Platform%3DAndroid&hl=en

FAQ

Q: What kind of network connection does the camera support?

A: The camera supports wireless connection and wired connection, which can be selected according to the network situation.

Q: If the camera is offline, will the video recording be continued?

A: If the camera is powered on but disconnect to the Internet, then video recording on micro SD card will continue but cloud recording will stop. If the camera is powered off, both video recordings will stop.

Q: Why the alarm is triggered when nobody in the image?

A: Try to set the alarm sensitivity lower. Please notice that vehicle and animals are also the trigger source.

Q: What if I forget my password?

A: Please go to the EZVIZ app > login page, tap on “Forgot password?” > Enter your account’s email address or phone number. (Send)> Input the verification code > Reset your password.

Q: Why can't I receive my verification code?

A:
1. If you registered the account via email, please check your junk mail.
   If still haven't received the verification code, you might have email filter/block restricting this email, please check with your email provider.
2. If you registered an account via mobile number, please confirm whether your mobile can receive SMS short codes or not.
3. If you still haven't received the verification code, please provide your number, your country, time of request to the support center at support@ezvizlife.com or contact your regional support team.

Q: How to solve Wi-Fi configuration failed?

A: Please check the following settings:

1. Ensure that your mobile phone is connected to the Wi-Fi and the Wi-Fi network is working properly.
2. Check the network condition:
   - Make sure your network has no firewall or other limits.
   - Ensure the router can distribute IP address to your device or disable the static IP setting (DHCP is enabled by default on all EZVIZ devices).
3. Reset your camera; ensure that your device is in ready mode or Wi-Fi configuration mode > then use the EZVIZ app for device Wi-Fi configuration.

i For additional information about the device, please refer to www.ezviz.com.

Regulatory Information

This product and - if applicable - the supplied accessories too are marked with "CE" and comply therefore with the applicable harmonized European standards listed under the Radio Equipment Directive 2014/53/EU, the EMC Directive 2014/30/EU, the RoHS Directive 2011/65/EU.

2012/19/EU (WEEE directive): Products marked with this symbol cannot be disposed of as unsorted municipal waste in the European Union. For proper recycling, return this product to your local supplier upon the purchase of equivalent new equipment, or dispose of it at designated collection points. For more information see: www.recyclethis.info.

2006/66/EC and its amendment 2013/56/EU (battery directive): This product contains a battery that cannot be disposed of as unsorted municipal waste in the European Union. See the product documentation for specific battery information. The battery is marked with this symbol, which may include lettering to indicate cadmium (Cd), lead (Pb), or mercury (Hg). For proper recycling, return the battery to your supplier or to a designated collection point. For more information see: www.recyclethis.info.

EC DECLARATION OF CONFORMITY

Hereby, Hangzhou EZVIZ Software Co., Ltd. declares that the radio equipment type [refer to the cover of the quick start guide] is in compliance with Directive 2014/53/EU.
The full text of the EC DECLARATION OF CONFORMITY is available at the following web link: http://www.ezvizlife.com/declaration-of-conformity.

Important Safety Information

	Note: Please read the manual before using the device.
	Alternating current.
	Direct current.
	This symbol on the device indicates that the safety compatibility manual and / or installation manual must be read, which contains information related to the safe operation of the device. **Caution:** Be sure to read these instructions before operating the equipment.
	This symbol on the device indicates that the surface or component is overheating. If you touch this surface, you may cause personal injury. **Warning:** To reduce the risk of personal injury due to overheating of the components, wait until the surface cools down before touching it.
	Warning: The separate earthing terminal must be permanently connected to earth. **Warning:** For SELV DC input: the DC power source shall comply with the Safety Extra-Low Voltage (SELV) requirements of EN/IEC 60950-1, EN/IEC 62368-1. **Warning:** The power source should meet limited power source or PS2 requirements according to IEC/EN 60950-1 or IEC/EN 62368-1.
	Caution: Do not block ventilation openings while the system is on, and keep at least 2 cm distance from ventilation openings and walls or other things which may block the openings. **Warning:** Disposal of a battery into fire or a hot oven, or mechanically crushing or cutting of a battery that can result in an explosion. **Warning:** Leaving a battery in an extremely high temperature surrounding environment that can result in an explosion or the leakage of flammable liquid or gas. **Warning:** A battery subjected to extremely low air pressure that may result in an explosion or the leakage of flammable liquid or gas. **Warning:** Dispose of used batteries according to the instructions. **Warning:** Replace only with the same or equivalent type recommended by the manufacturer. **Caution:** THE PRODUCT IS BUILT IN A REPLACEABLE BATTERY. **Warning:** Do not ingest battery, Chemical Burn Hazard. **Caution:** This product contains a coin/button cell battery. If the coin/button cell battery is swallowed, it can cause severe internal burns in just 2 hours and can lead to death. **Caution:** Keep new and used batteries away from children. **Caution:** If the battery compartment does not close securely, stop using the product and keep it away from children. **Caution:** If you think batteries might have been swallowed or placed inside any part of the body, seek immediate medical attention. **Caution:** Risk of fire or explosion if the battery is replaced by an incorrect type. **Warning**: Do not attempt to disassemble, repair, or alter the device. **Warning**: To avoid electric shock, please wear shoes with rubber soles. To avoid injuries, please wear glooves when maintaining the device. **Warning**: If you are not familiar with knowledge of cable laying and cable connection, please make sure that the power switch has been turned off before installation and maintenance. **Warning**: If you want to disconnect the device from the power source, please unplug the DC power terminal that connects the power adapter and device. **Warning:** Flame may spread outside and ignite nearby combustible material without front cover! Please reinstall the front cover correctly before normal operation. **Warning:** Do not detach the front cover when the device is working properly. The front cover can only be detached when you need to restart the device. After restarting the device, please reinstall the front cover correctly before normal operation.

Use only power adapters listed in the Table.

Adapter manufacture	Adapter model
Shenzhen Honor Electronic Co., Ltd	ADS-10LA-06 05010EPCU/EPC(US), ADS-10RH-06 05010EPB (UK), ADS-10RH-06 05010EPG(EU), ADS-10RH-06 05010EPSA(SA), ADS-10RH-06 05010EPBR(BR), ADS-10RH-06 05010EPI(IN), ADS-12CG-06 05010EPC(JP)
Sichuan Jiuzhou Electronic Technology Co., Ltd	DYS05200CQ-U, DYS05200CQ-E

A 5V2A adapter is recommended, if the power adapter is not included in the package.

FCC Information

Please take attention that changes or modification not expressly approved by the party responsible for compliance could void the user's authority to operate the equipment.

FCC compliance

This equipment has been tested and found to comply with the limits for a Class B digital device, pursuant to part 15 of the FCC Rules. These limits are designed to provide reasonable protection against harmful interference in a residential installation. This equipment generates, uses and can radiate radio frequency energy and, if not installed and used in accordance with the instructions, may cause harmful interference to radio communications. However, there is no guarantee that interference will not occur in a particular installation. If this equipment does cause harmful interference to radio or television reception, which can be determined by turning the equipment off and on, the user is encouraged to try to correct the interference by one or more of the following measures:

—Reorient or relocate the receiving antenna.
—Increase the separation between the equipment and receiver.
—Connect the equipment into an outlet on a circuit different from that to which the receiver is connected.
—Consult the dealer or an experienced radio/TV technician for help.

This equipment should be installed and operated with a minimum distance 20cm between the radiator and your body.

FCC Conditions

This device complies with part 15 of the FCC Rules. Operation is subject to the following two conditions:

1. This device may not cause harmful interference.
2. This device must accept any interference received, including interference that may cause undesired operation.

Industry Canada ICES-003 Compliance

This device meets the CAN ICES-3 (B)/NMB-3(B) standards requirements.
This device complies with Industry Canada licence-exempt RSS standard(s). Operation is subject to the following two conditions:
(1) this device may not cause interference, and
(2) this device must accept any interference, including interference that may cause undesired operation of the device.
Under Industry Canada regulations, this radio transmitter may only operate using an antenna of a type and maximum (or lesser) gain approved for the transmitter by Industry Canada. To reduce potential radio interference to other users, the antenna type and its gain should be so chosen that the equivalent isotropically radiated power (e.i.r.p.) is not more than that necessary for successful communication.
This equipment should be installed and operated with a minimum distance 20cm between the radiator and your body.
(i) the device for operation in the band 5150-5250 MHz is only for indoor use to reduce the potential for harmful interference to co-channel mobile satellite systems;
(ii) the maximum antenna gain permitted for devices in the bands 5250-5350 MHz and 5470-5725 MHz shall comply with the e.i.r.p. limit; and
(iii) the maximum antenna gain permitted for devices in the band 5725-5825 MHz shall comply with the e.i.r.p. limits specified for point-to-point and non point-to-point operation as appropriate.
Users should also be advised that high-power radars are allocated as primary users (i.e. priority users) of the bands 5250-5350 MHz and 5650-5850 MHz and that these radars could cause interference and/or damage to LE-LAN devices.
Le présent appareil est conforme aux CNR d'Industrie Canada applicables aux appareils radioexempts de licence. L'exploitation est autorisée aux deux conditions suivantes :
(1) l'appareil ne doit pas produire de brouillage, et
(2) l'utilisateur de l'appareil doit accepter tout brouillage radioélectrique subi, même si le brouillage est susceptible d'en compromettre le fonctionnement.
Conformément à la réglementation d'Industrie Canada, le présent émetteur radio peut fonctionner avec une antenne d'un type et d'un gain maximal (ou inférieur) approuvé pour l'émetteur par Industrie Canada. Dans le but de réduire les risques de brouillage radioélectrique à l'intention des autres utilisateurs, il faut choisir le type d'antenne et son gain de sorte que la puissance isotrope rayonnée équivalente (p.i.r.e.) ne dépasse pas l'intensité nécessaire à l'établissement d'une communication satisfaisante.
Cet équipement doit être installé et utilisé à une distance minimale de 20 cm entre le radiateur et votre corps.
(i)Les dispositifs fonctionnant dans la bande 5150-5250 MHz sont réservés uniquement pour une utilisation à l'intérieur afin de réduire les risques de brouillage préjudiciable aux systèmes de satellites mobiles utilisant les mêmes canaux.
(ii) le gain d'antenne maximal autorisé pour les appareils dans les bandes 5250-5350 MHz et 5470-5725 MHz doivent respecter le pire limiter; et
(iii) le gain d'antenne maximal autorisé pour les appareils dans la bande 5725-5825 MHz doivent respecter le pire limites spécifiées pour le point-à-point et l'exploitation non point à point, le cas échéant.
Les utilisateurs de radars de haute puissance sont désignés utilisateurs principaux (c.-à-d., qu'ils ont la priorité) pour les bandes 5250-5350 MHz et 5650-5850 MHz et que ces radars pourraient causer du brouillage et/ou des dommages aux dispositifs LAN-EL.

IFETEL Information

La operación de este equipo está sujeta a las siguientes dos condiciones:
(1) es posible que este equipo o dispositivo no cause interferencia perjudicialy
(2) este equipo o dispositivo debe aceptar cualquier interferencia, incluyendo la que pueda causar su operación no deseada.