INSTRUCTION MANUAL

866- 2401S / 2402S / 2403S / 2404S / 2405S / 2406S / 2407S / 2408S / 2410S / 2411S / 2412S/ 2413S / 2415S / 2416S / 2417S / 2418S / 2419S / 2420S / 2421S / 2422S / 2423S / 2424S / 2425S / 2426S / 2427S / 2428S / 2429S / 2805S / 378H2S / 378H2HUTS / 378H3S / 378H3TS / 2201S

⚠ WARNING:

1. Never recharge non-rechargeable batteries.
2. Always remove exhausted batteries from the product.
3. Do not mix old and new batteries.
4. Do not mix different types of batteries.
5. Only use the recommended type of battery.
6. Always insert the batteries using the correct polarity.
7. Always remove exhausted batteries from the product.
8. Do not short circuit terminals.
9. Batteries are to be changed by an adult.
10. It is advisable to remove batteries from the unit if the. product is not to be used for long periods of time.

CAUTION:

.Do not operate this model in the vicinity of another model using the same frequency.
.Otherwise, radio signals may interfere with each other and the model cars may become out of control, causing accidents
.Use alkaline battery and rechargeable battery correctly.
.Always turn off power of the model car and the remote controller in sequence after use.
.If this model is to be stored for a long time, all batteries in the model car and the remote controller should be removed to avoid battery leakage.

To load battery on controller

(Please use it under guidance of adult)

Open the battery cover on controller in the direction as shown in .

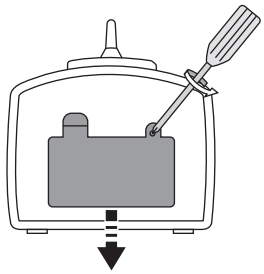

Set 2X1.5V battery in the correct direction.

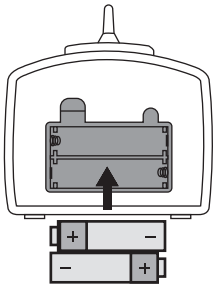

Replace the battery cover on controller in the direction as shown in .

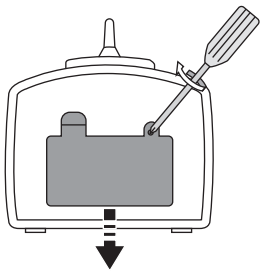

Installation of car body batteries group

(Please use it under guidance of adult)

Unscrew the battery cover with a plus driver, press the buckle and open the cover.

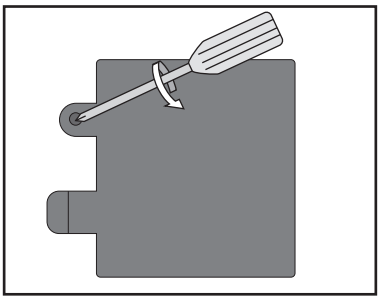

Set 3X1.5V batteries in the correct direction.

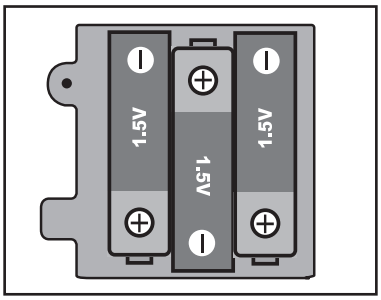

Replace the battery cover and fix with screw.

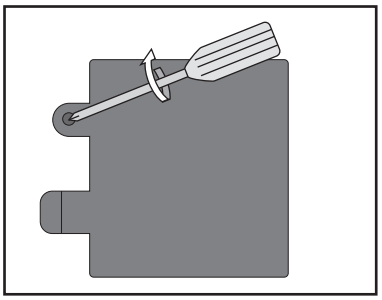

Operating Instruction

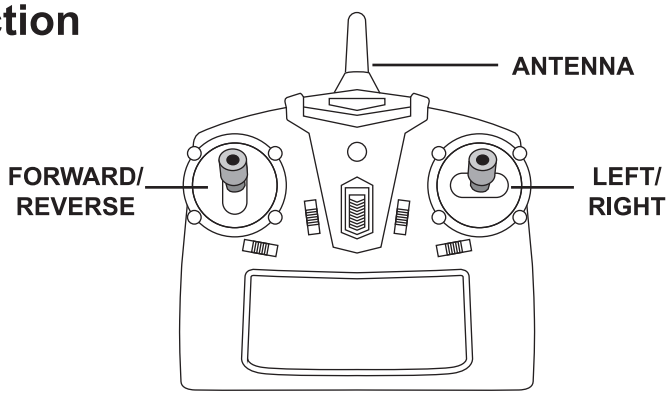

FCC Compliance Statements

This device complies with Part 15 of the FCC Rules. Operation is subject to the following two conditions: (1) this device may not cause harmful interference, and (2) this device must accept any interference received, including interference that may cause undesired operation.

Note: This equipment has been tested and found to comply with the limits for a Class B digital device, pursuant to Part 15 of the FCC Rules. These limits are designed to provide reasonable protection against harmful interference in a residential installation. This equipment generates, uses and can radiate radio frequency energy and, if not installed and used in accordance with the instructions, may cause harmful interference to radio communications. However, there is no guarantee that interference will not occur in a particular installation.

If this equipment does cause harmful interference to radio or television reception, which can be determined by turning the equipment off and on, the user is encouraged to try to correct the interference by one or more of the following measures:

-- Reorient or relocate the receiving antenna.

-- Increase the separation between the equipment and receiver.

-- Connect the equipment into an outlet on a circuit different from that to which the receiver is connected.

-- Consult the dealer or an experienced radio/TV technician for help.

Caution: Changes or modifications not expressly approved by the party responsible for compliance could void the user's authority to operate the equipment.

This equipment complies with FCC radiation exposure limits set forth for an uncontrolled environment. This transmitter must not be co-located or operating in conjunction with any other antenna or transmitter.