Google,™Android,™Google play and other marks are trademarks of Google LLC;
Pie is a trademark of Mondelez International, Inc. group.

Google,™Android,™Google Play y otras marcas son marcas comerciales de Google LLC.
Pie es una marca comercial del grupo Mondelez International, Inc.

WARRANTY

Dear customer, thank you for choosing YEZZ as your smartphone brand. The warranty period will be established by the legislation of the country in which you made your purchase. The accessories (headphones, charger and battery) have a three (3) month warranty.
Visit us at www.myyezz.com and click Support for more information on how to validate your warranty.

GARANTÍA

Estimado cliente, gracias por preferir a YEZZ como su marca de teléfonos inteligentes. El tiempo de garantía es el establecido por la legislación del país en donde realizó la compra. Los accesorios (auriculares, cargador y batería) tienen garantía por tres (3) meses.
Ingrese a www.myyezz.com y haga clic en Soporte para obtener más información sobre cómo validar su garantía.

www.myyezz.com

CONTACT US / CONTÁCTENOS

Colombia / Costa Rica / Dominican Republic / Ecuador / El Salvador / Guatemala / Honduras / Mexico / Nicaragua / Panama/ Peru / Uruguay / Venezuela	soporte@myyezz.com
USA	support@myyezz.com

Or consult the digital user's manual in your YEZZ smartphone
O consulte el manual de usuario digital en su teléfono inteligente YEZZ

5

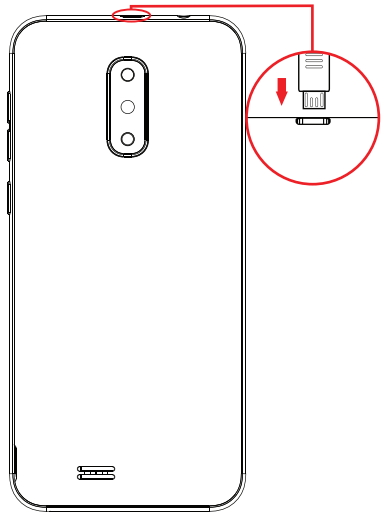

EN Insert USB cable and charge for 8 hours
ES Inserte el cable USB y cargue por 8 horas
PT Insira o cabo USB e carregue por 8 horas

MAX 1 PLUS

EN Quick Start Guide
ES Guía de Inicio Rápido
PT Guia de Início Rápido

1

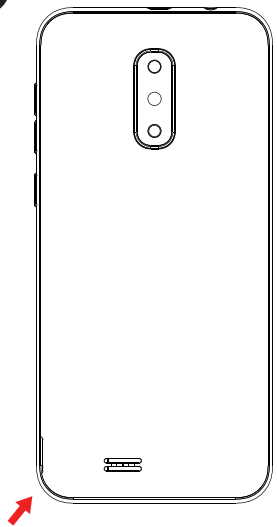

EN Remove battery cover
ES Remueva la cubierta trasera
PT Remova a capa de bateria

2

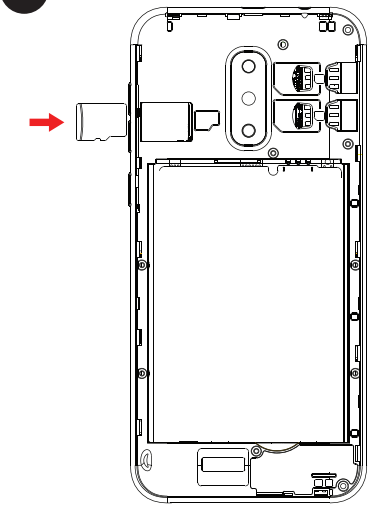

EN Insert memory card
ES Inserte la memoria
PT Insira o memória

3

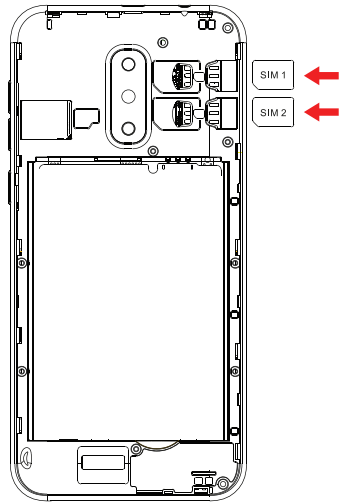

EN Insert SIM 1 + SIM 2
ES Inserte SIM 1 + SIM 2
PT Insira o(s) cartão(ões) SIM 1 e SIM2

4

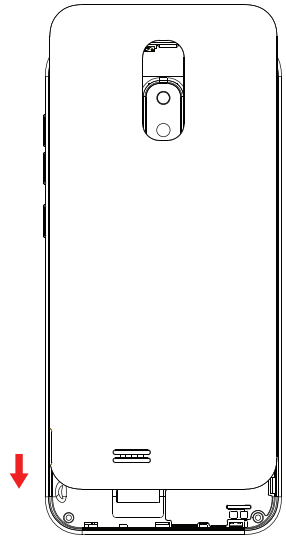

EN Replace battery cover
ES Reponer la cubierta trasera
PT Fechar a capa de bateria

FCC Warning:

Any Changes or modifications not expressly approved by the party responsible for compliance could void the user's authority to operate the equipment. This device complies with part 15 of the FCC Rules. Operation is subject to the following two conditions: (1) This device may not cause harmful interference, and (2) this device must accept any interference received, including interference that may cause undesired operation

Note: This equipment has been tested and found to comply with the limits for a Class B digital device, pursuant to part 15 of the FCC Rules. These limits are designed to provide reasonable protection against harmful interference in a residential installation. This equipment generates, uses and can radiate radio frequency energy and, if not installed and used in accordance with the instructions, may cause harmful interference to radio communications. However, there is no guarantee that interference will not occur in a particular installation. If this equipment does cause harmful interference to radio or television reception, which can be determined by turning the equipment off and on, the user is encouraged to try to correct the interference by one or more of the following measures:

—Reorient or relocate the receiving antenna.

—Increase the separation between the equipment and receiver.

—Connect the equipment into an outlet on a circuit different from that to which the receiver is connected.

—Consult the dealer or an experienced radio/TV technician for help.

Specific Absorption Rate (SAR) information- SAR tests are conducted using standard operating positions accepted by the FCC with the phone transmitting at its highest certified power level in all tested frequency bands, although the SAR is determined at the highest
certified power level, the actual SAR level of the phone while operating can be well below the maximum value. Before a new model phone is a available for sale to the public, it must be tested and certified to the FCC that it does not exceed the exposure limit established by the FCC, tests for each phone are performed in positions and locations as required by the FCC. For body worn operation, this model phone has been tested and meets the FCC RF exposure guidelines when used with an accessory designated for this product or when used with an accessory that contains no metal and that positions the handset a minimum of 1cm from the body. Non-compliance with the above restrictions may result in violation of RF exposure guidelines