TEST REPORT

Applicant Name :	Bolt Modus Corp
Address :	Oficina N.33 Edificio Ofidepositos Central, Calidonia - Distrito Federal, Panama
Report Number :	SZNS211213-64444E-SA
FCC ID:	2APW4MAX2

Test Standard (s)

FCC Part 2.1093

Sample Description

Product Type:	MAX2
Model No.:	MAX2
Trade Mark:	YEZZ
Date Received:	2021/12/14
Date of Test:	2022/2/21~2022/2/23
Report Date:	2022/2/25

Test Result:	Pass*

* In the configuration tested, the EUT complied with the standards above.

Prepared and Checked By:

Lance Li

EMC Engineer

Approved By:

Candy Li

EMC Engineer

Note: This report may contain data that are not covered by the A2LA accreditation and are marked with an asterisk "★ ".
Shenzhen Accurate Technology Co., Ltd. is not responsible for the authenticity of any test data provided by the applicant. Data included from the applicant that may affect test results are marked with an asterisk '*'. Customer model name, addresses, names, trademarks etc. are not considered data.
This report cannot be reproduced except in full, without prior written approval of the Company. Unless otherwise stated the results shown in this test report refer only to the sample(s) tested. This report is valid only with a valid digital signature. The digital signature may be available only under the Adobe software above version 7.0.

Shenzhen Accurate Technology Co., Ltd.
1/F., Building A, Changyuan New Material Port, Science & Industry Park, Nanshan District, Shenzhen, Guangdong, P.R. China
Tel: +86 755-26503290 Fax: +86 755-26503396 Web: www.atc-lab.com

Attestation of Test Results			
MODE		**Max. SAR Level(s) Reported(W/kg)**	**Limit (W/kg)**
GSM 850	1g Head SAR	0.09	**1. 6**
	1g Body SAR	0.25	
PCS 1900	1g Head SAR	0.07	
	1g Body SAR	0.47	
WCDMA Band 2	1g Head SAR	0.27	
	1g Body SAR	0.37	
WCDMA Band 5	1g Head SAR	0.05	
	1g Body SAR	0.09	
LTE Band 2	1g Head SAR	**0.45**	
	1g Body SAR	0.42	
LTE Band 4	1g Head SAR	**0.45**	
	1g Body SAR	**0.69**	
LTE Band 7	1g Head SAR	0.39	
	1g Body SAR	0.65	
LTE Band 12&17	1g Head SAR	0.16	
	1g Body SAR	0.40	
2.4Gwifi	1g Head SAR	0.29	
	1g Body SAR	0.30	
Simultaneous	1g Head SAR	**0.74**	
	1g Body SAR	**0.99**	
	1g Body SAR	**0.99(Hotspot)**	

Applicable Standards	**FCC 47 CFR part 2.1093** Radiofrequency radiation exposure evaluation: portable devices
	RF Exposure Procedures: TCB Workshop April 2015
	IEEE1528:2013 IEEE Recommended Practice for Determining the Peak Spatial-Average Specific Absorption Rate (SAR) in the Human Head from Wireless Communications Devices: Measurement Techniques
	IEC 62209-1:2016 Measurement procedure for the assessment of specific absorption rate of human exposure to radio frequency fields from hand-held and body-mounted wireless communication devices – Part 1: Devices used next to the ear (Frequency range of 300 MHz to 6 GHz)
	KDB procedures KDB 447498 D01 General RF Exposure Guidance v06 KDB 648474 D04 Handset SAR v01r03 KDB 865664 D01 SAR Measurement 100 MHz to 6 GHz v01r04 KDB 865664 D02 RF Exposure Reporting v01r02 KDB 941225 D01 3G SAR Procedures v03r01 KDB 941225 D05 SAR for LTE Devices v02r05 KDB 941225 D06 Hotspot Mode v02r01
Note: This wireless device has been shown to be capable of compliance for localized specific absorption rate (SAR) for General Population/Uncontrolled Exposure limits specified in **FCC 47 CFR part 2.1093** and has been tested in accordance with the measurement procedures specified in IEEE 1528-2013 and RF exposure KDB procedures. **The results and statements contained in this report pertain only to the device(s) evaluated.**	

TABLE OF CONTENTS

DOCUMENT REVISION HISTORY **5**
EUT DESCRIPTION **6**
TECHNICAL SPECIFICATION 6
REFERENCE, STANDARDS, AND GUIDELINES **7**
SAR LIMITS 8
FACILITIES **9**
DESCRIPTION OF TEST SYSTEM **10**
EQUIPMENT LIST AND CALIBRATION **15**
EQUIPMENTS LIST & CALIBRATION INFORMATION 15
SAR MEASUREMENT SYSTEM VERIFICATION **16**
LIQUID VERIFICATION 16
SYSTEM ACCURACY VERIFICATION 18
SAR SYSTEM VALIDATION DATA 19
EUT TEST STRATEGY AND METHODOLOGY **24**
TEST POSITIONS FOR DEVICE OPERATING NEXT TO A PERSON'S EAR 24
CHEEK/TOUCH POSITION 25
EAR/TILT POSITION 25
TEST POSITIONS FOR BODY-WORN AND OTHER CONFIGURATIONS 26
TEST DISTANCE FOR SAR EVALUATION 26
SAR EVALUATION PROCEDURE 27
CONDUCTED OUTPUT POWER MEASUREMENT **28**
TEST PROCEDURE 28
RADIO CONFIGURATION 28
MAXIMUM TARGET OUTPUT POWER 33
STANDALONE SAR TEST EXCLUSION CONSIDERATIONS **47**
ANTENNA DISTANCE TO EDGE 48
STANDALONE SAR TEST EXCLUSION CONSIDERATIONS 48
STANDALONE SAR ESTIMATION: 49
SAR TEST EXCLUSION FOR THE EUT EDGE CONSIDERATIONS RESULT 49
SAR MEASUREMENT RESULTS **50**
SAR TEST DATA 50
SAR MEASUREMENT VARIABILITY **61**
SAR SIMULTANEOUS TRANSMISSION DESCRIPTION **62**
SAR PLOTS **67**
APPENDIX A MEASUREMENT UNCERTAINTY **68**
APPENDIX B EUT TEST POSITION PHOTOS **69**
APPENDIX C PROBE CALIBRATION CERTIFICATES **70**
APPENDIX D DIPOLE CALIBRATION CERTIFICATES **71**

DOCUMENT REVISION HISTORY

Revision Number	Report Number	Description of Revision	Date of Revision
0	SZNS211213-64444E-SA	Original Report	2022/2/25

EUT DESCRIPTION

This report has been prepared on behalf of ***Bolt Modus Corp.*** and their product ***MAX2***, Model: ***MAX2***, FCC ID: ***2APW4MAX2*** or the EUT (Equipment under Test) as referred to in the rest of this report.

Technical Specification

Device Type:	Portable
Exposure Category:	Population / Uncontrolled
Antenna Type(s):	Internal Antenna
DTM Type:	Class B
Multi-slot Class:	GPRS(Class 12);
Body-Worn Accessories:	Headset
Face-Head Accessories:	None
Operation Mode :	GSM Voice, GPRS Data, WCDMA(R99 (Voice+Data), HSDPA/HSUPA/ HSPA+), FDD-LTE, Wi-Fi and Bluetooth
Frequency Band:	GSM 850: 824-849 MHz(TX); 869-894 MHz(RX) PCS 1900: 1850-1910 MHz(TX); 1930-1990 MHz(RX) WCDMA Band 2: 1850-1910 MHz(TX); 1930-1990 MHz(RX) WCDMA Band 5: 824-849 MHz(TX); 869-894 MHz(RX) LTE Band 2: 1850-1910 MHz(TX); 1930-1990 MHz(RX) LTE Band 4: 1710-1755 MHz(TX) ; 2110-2155 MHz(RX) LTE Band 7: 2500-2570 MHz(TX); 2620-2690 MHz(RX) LTE Band 12: 699-716 MHz(TX); 729-746 MHz(RX) LTE Band 17: 704-716 MHz(TX); 734-746 MHz(RX) Wi-Fi 2.4G: 2412 -2472 MHz(TX&RX) Bluetooth: 2402 -2480 MHz BLE: 2402 -2480 MHz
Conducted RF Power:	GSM 850: 32.71 dBm; PCS 1900: 29.41 dBm WCDMA Band 2: 20.63 dBm WCDMA Band 5: 22.88 dBm LTE Band 2: 24.12 dBm; LTE Band 4: 24.70 dBm LTE Band 7: 19.55 dBm; LTE Band 12: 23.64 dBm LTE Band 17: 24.07 dBm Wi-Fi 2.4G: 12.88 dBm Bluetooth(BDR/EDR): 4.35 dBm BLE: 4.97 dBm
Power Source:	Rechargeable Battery
Normal Operation:	Head and Body-worn

REFERENCE, STANDARDS, AND GUIDELINES

FCC:

The Report and Order requires routine SAR evaluation prior to equipment authorization of portable transmitter devices, including portable telephones. For consumer products, the applicable limit is 1.6 mW/g as recommended by the ANSI/IEEE standard C95.1-1992 [6] for an uncontrolled environment (Paragraph 65). According to the Supplement C of OET Bulletin 65 “Evaluating Compliance with FCC Guide-lines for Human Exposure to Radio frequency Electromagnetic Fields", released on Jun 29, 2001 by the FCC, the device should be evaluated at maximum output power (radiated from the antenna) under “worst-case” conditions for normal or intended use, incorporating normal antenna operating positions, device peak performance frequencies and positions for maximum RF energy coupling.

This report describes the methodology and results of experiments performed on wireless data terminal. The objective was to determine if there is RF radiation and if radiation is found, what is the extent of radiation with respect to safety limits. SAR (Specific Absorption Rate) is the measure of RF exposure determined by the amount of RF energy absorbed by human body (or its parts) – to determine how the RF energy couples to the body or head which is a primary health concern for body worn devices. The limit below which the exposure to RF is considered safe by regulatory bodies in North America is 1.6 mW/g average over 1 gram of tissue mass.

CE:

The order requires routine SAR evaluation prior to equipment authorization of portable transmitter devices, including portable telephones. For consumer products, the applicable limit is 2 mW/g as recommended by EN62209-1 for an uncontrolled environment. According to the Standard, the device should be evaluated at maximum output power (radiated from the antenna) under “worst-case” conditions for normal or intended use, incorporating normal antenna operating positions, device peak performance frequencies and positions for maximum RF energy coupling.

This report describes the methodology and results of experiments performed on wireless data terminal. The objective was to determine if there is RF radiation and if radiation is found, what is the extent of radiation with respect to safety limits. SAR (Specific Absorption Rate) is the measure of RF exposure determined by the amount of RF energy absorbed by human body (or its parts) – to determine how the RF energy couples to the body or head which is a primary health concern for body worn devices. The limit below which the exposure to RF is considered safe by regulatory bodies in Europe is 2 mW/g average over 10 gram of tissue mass.

The test configurations were laid out on a specially designed test fixture to ensure the reproducibility of measurements. Each configuration was scanned for SAR. Analysis of each scan was carried out to characterize the above effects in the device.

SAR Limits

FCC Limit(1g Tissue)

EXPOSURE LIMITS	SAR (W/kg)	
	(General Population / Uncontrolled Exposure Environment)	(Occupational / Controlled Exposure Environment)
Spatial Average (averaged over the whole body)	0.08	0.4
Spatial Peak (averaged over any 1 g of tissue)	**1.60**	8.0
Spatial Peak (hands/wrists/feet/ankles averaged over 10 g)	4.0	20.0

CE Limit(10g Tissue)

EXPOSURE LIMITS	SAR (W/kg)	
	(General Population / Uncontrolled Exposure Environment)	(Occupational / Controlled Exposure Environment)
Spatial Average (averaged over the whole body)	0.08	0.4
Spatial Peak (averaged over any 10 g of tissue)	2.0	10
Spatial Peak (hands/wrists/feet/ankles averaged over 10 g)	4.0	20.0

Population/Uncontrolled Environments are defined as locations where there is the exposure of individual who have no knowledge or control of their exposure.

Occupational/Controlled Environments are defined as locations where there is exposure that may be incurred by people who are aware of the potential for exposure (i.e. as a result of employment or occupation).

General Population/Uncontrolled environments Spatial Peak limit 1.6W/kg (FCC) & 2 W/kg (CE) applied to the EUT.

FACILITIES

The test site used by Shenzhen Accurate Technology Co., Ltd. to collect test data is located on the 1/F., Building A, Changyuan New Material Port, Science & Industry Park, Nanshan District, Shenzhen, Guangdong, P.R. China.

The test site has been approved by the FCC under the KDB 974614 D01 and is listed in the FCC Public Access Link (PAL) database, FCC Registration No.: 708358,the FCC Designation No.: CN1189.
Accredited by American Association for Laboratory Accreditation (A2LA) The Certificate Number is 4297.01 .

Listed by Innovation, Science and Economic Development Canada (ISEDC), the Registration Number is 5077A.

The test site has been registered with ISED Canada under ISED Canada Registration Number CN0016.

DESCRIPTION OF TEST SYSTEM

These measurements were performed with the automated near-field scanning system DASY5 from Schmid & Partner Engineering AG (SPEAG) which is the Fifth generation of the system shown in the figure hereinafter:

DASY5 System Description

The DASY5 system for performing compliance tests consists of the following items:

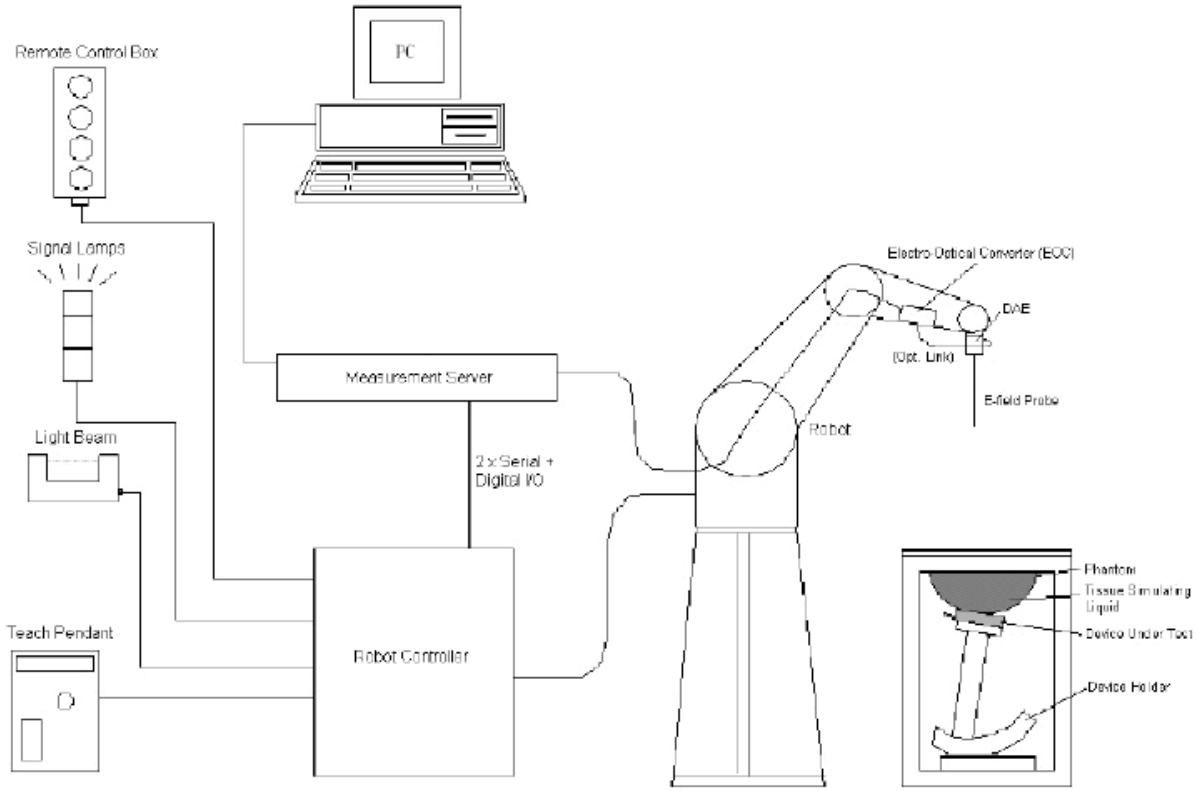

- A standard high precision 6-axis robot (Staubli TX=RX family) with controller, teach pendant and software. An arm extension for accommodating the data acquisition electronics (DAE).
- An isotropic field probe optimized and calibrated for the targeted measurement.
- A data acquisition electronics (DAE) which performs the signal application, signal multiplexing, AD-conversion, offset measurements, mechanical surface detection, collision detection, etc. The unit is battery powered with standard or rechargeable batteries. The signal is optically transmitted to the EOC.
- The Electro-optical converter (EOC) performs the conversion from optical to electrical signals for the digital communication to the DAE. To use optical surface detection, a special version of the EOC is required. The EOC signal is transmitted to the measurement server.
- The function of the measurement server is to perform the time critical tasks such as signal filtering, control of the robot operation and fast movement interrupts.
- The Light Beam used is for probe alignment. This improves the (absolute) accuracy of the probe positioning.
- A computer running Win7 professional operating system and the DASY52 software.
- Remote control and teach pendant as well as additional circuitry for robot safety such as warning lamps, etc.
- The phantom, the device holder and other accessories according to the targeted measurement.

DASY5 Measurement Server

The DASY5 measurement server is based on a PC/104 CPU board with a 400 MHz Intel ULV Celeron, 128 MB chip-disk and 128 MB RAM. The necessary circuits for communication with the DAE4 (or DAE3) electronics box, as well as the 16-bit AD converter system for optical detection and digital I/O interface are contained on the DASY6 I/O board, which is directly connected to the PC/104 bus of the CPU board.

The measurement server performs all real-time data evaluations of field measurements and surface detection, controls robot movements, and handles safety operations. The PC operating system cannot interfere with these time-critical processes. All connections are supervised by a watchdog, and disconnection of any of the cables to the measurement server will automatically disarm the robot and disable all program- controlled robot movements. Furthermore, the measurement server is equipped with an expansion port, which is reserved for future applications. Please note that this expansion port does not have a standardized pinout, and therefore only devices provided by SPEAG can be connected. Connection of devices from any other supplier could seriously damage the measurement server.

Data Acquisition Electronics

The data acquisition electronics (DAE4) consist of a highly sensitive electrometer-grade preamplifier with auto-zeroing, a channel and gain-switching multiplexer, a fast 16 bit AD-converter and a command decoder with a control logic unit. Transmission to the measurement server is accomplished through an optical downlink for data and status information, as well as an optical uplink for commands and the clock.

The mechanical probe mounting device includes two different sensor systems for frontal and sideways probe contacts. They are used for mechanical surface detection and probe collision detection.

The input impedance of both the DAE4 as well as of the DAE3 box is 200MOhm; the inputs are symmetrical and floating. Common mode rejection is above 80 dB.

EX3DV4 E-Field Probes

Frequency	10 MHz to > 6 GHz Linearity: ± 0.2 dB (30 MHz to 6 GHz)
Directivity	± 0.3 dB in TSL (rotation around probe axis) ± 0.5 dB in TSL (rotation normal to probe axis)
Dynamic Range	10 µW/g to > 100 mW/g Linearity: ± 0.2 dB (noise: typically < 1 µW/g)
Dimensions	Overall length: 337 mm (Tip: 20 mm) Tip diameter: 2.5 mm (Body: 12 mm) Typical distance from probe tip to dipole centers: 1 mm
Application	High precision dosimetric measurements in any exposure scenario (e.g., very strong gradient fields); the only probe that enables compliance testing for frequencies up to 6 GHz with precision of better 30%.
Compatibility	DASY3, DASY4, DASY52 SAR and higher, EASY4/MRI

SAM Twin Phantom

The SAM Twin Phantom (shown in front of DASY5) is a fiberglass shell phantom with shell thickness 2 mm, except in the ear region where the thickness is increased to 6 mm..

When the phantom is mounted inside allocated slot of the DASY5 platform, phantom reference points can be taught directly in the DASY5 V5.2 software. When the DASY5 platform is used to mount the

Phantom, some of the phantom teaching points cannot be reached by the robot in DASY5 V5.2. A special tool called P1a-P2aX-Former is provided to transform two of the three points, P1 and P2, to reachable locations. To use these new teaching points, a revised phantom configuration file is required.
In addition to our standard broadband liquids, the phantom can be used with the following tissue simulating liquids:

Sugar-water-based liquids can be left permanently in the phantom. Always cover the liquid when the system is not in use to prevent changes in liquid parameters due to water evaporation.
DGBE-based liquids should be used with care. As DGBE is a softener for most plastics, the liquid should be taken out of the phantom, and the phantom should be dried when the system is not in use (desirable at least once a week).

Do not use other organic solvents without previously testing the solvent resistivity of the phantom.
Approximately 25 liters of liquid is required to fill the SAM Twin phantom.

Calibration Frequency Points for EX3DV4 E-Field Probes SN: 3619 Calibrated: 2021/08/25

Calibration Frequency Point(MHz)	Frequency Range(MHz)		Conversion Factor		
	From	To	X	Y	Z
450 Head	350	550	8.89	8.89	8.89
600 Head	500	680	8.96	8.96	8.96
750 Head	680	810	8.63	8.63	8.63
835 Head	810	860	8.50	8.50	8.50
900 Head	860	1000	8.28	8.28	8.28
1750 Head	1650	1810	7.33	7.33	7.33
1900 Head	1810	2000	7.07	7.07	7.07
2450 Head	2350	2500	6.69	6.69	6.69
2600 Head	2500	2700	6.53	6.53	6.53
5250 Head	5140	5360	4.37	4.37	4.37
5600 Head	5490	5700	4.03	4.03	4.03
5800 Head	5700	5910	3.93	3.93	3.93

Area Scans

Area scans are defined prior to the measurement process being executed with a user defined variable spacing between each measurement point (integral) allowing low uncertainty measurements to be conducted. Scans defined for FCC applications utilize a 15mm 2 step integral, with 1.5mm interpolation used to locate the peak SAR area used for zoom scan assessments.

Where the system identifies multiple SAR peaks (which are within 25% of peak value) the system will provide the user with the option of assessing each peak location individually for zoom scan averaging.

Zoom Scan (Cube Scan Averaging)

The averaging zoom scan volume utilized in the DASY5 software is in the shape of a cube and the side dimension of a 1 g or 10 g mass is dependent on the density of the liquid representing the simulated tissue. A density of 1000 kg/m^3 is used to represent the head and body tissue density and not the phantom liquid density, in order to be consistent with the definition of the liquid dielectric properties, i.e. the side length of the 1g cube is 10mm,with the side length of the 10g cube is 21.5mm.

When the cube intersects with the surface of the phantom, it is oriented so that 3 vertices touch the surface of the shell or the center of a face is tangent to the surface. The face of the cube closest to the surface is modified in order to conform to the tangent surface.

The zoom scan integer steps can be user defined so as to reduce uncertainty, but normal practice for typical test applications (including FCC) utilize a physical step of 7 x7 x 7 (5mmx5mmx5mm) providing a volume of 30 mm in the X & Y & Z axis.

Tissue Dielectric Parameters for Head and Body Phantoms

The head tissue dielectric parameters recommended by the IEC 62209-1:2016

Recommended Tissue Dielectric Parameters for Head

Table A.3 – Dielectric properties of the head tissue-equivalent liquid

Frequency MHz	Relative permittivity ε_r	Conductivity (σ) S/m
300	45,3	0,87
450	43,5	0,87
750	*41,9*	*0,89*
835	41,5	0,90
900	41,5	0,97
1 450	40,5	1,20
1 500	*40,4*	*1,23*
1 640	*40,2*	*1,31*
1 750	*40,1*	*1,37*
1 800	40,0	1,40
1 900	40,0	1,40
2 000	40,0	1,40
2 100	*39,8*	*1,49*
2 300	*39,5*	*1,67*
2 450	39,2	1,80
2 600	*39,0*	*1,96*
3 000	38,5	2,40
3 500	*37,9*	*2,91*
4 000	*37,4*	*3,43*
4 500	*36,8*	*3,94*
5 000	*36,2*	*4,45*
5 200	*36,0*	*4,66*
5 400	*35,8*	*4,86*
5 600	*35,5*	*5,07*
5 800	*35,3*	*5,27*
6 000	*35,1*	*5,48*

NOTE For convenience, permittivity and conductivity values at those frequencies which are not part of the original data provided by Drossos et al. [33] or the extension to 5 800 MHz are provided (i.e. the values shown *in italics*). These values were linearly interpolated between the values in this table that are immediately above and below these values, except the values at 6 000 MHz that were linearly extrapolated from the values at 3 000 MHz and 5 800 MHz.

EQUIPMENT LIST AND CALIBRATION

Equipments List & Calibration Information

Equipment	Model	S/N	Calibration Date	Calibration Due Date
DASY5 Test Software	DASY52 52.10.4	N/A	NCR	NCR
DASY5 Measurement Server	DASY5 6.0.31	N/A	NCR	NCR
Data Acquisition Electronics	DAE4	1562	2021/12/13	2022/12/12
E-Field Probe	EX3DV4	3619	2021/08/25	2022/08/24
Mounting Device	MD4HHTV5	SD 000 H01 KA	NCR	NCR
SAM Twin Phantom	SAM-Twin V5.0	1744	NCR	NCR
Dipole, 750MHz	D750V3	1194	2020/1/13	2023/1/12
Dipole,1800MHz	D1800V2	2d018	2020/10/15	2023/10/14
Dipole,1900MHz	D1900V2	5d128	2021/10/27	2024/10/26
Dipole,2450MHz	D2450V2	751	2020/10/13	2023/10/12
Dipole,2600MHz	D2600V2	1162	2019/10/2	2022/10/1
Simulated Tissue Liquid Head(500-9500MHz)	HBBL600-10000V6	180622-2	Each Time	/
Network Analyzer	8753D	3410A08288	2021/7/07	2022/7/06
Dielectric Assessment Kit	DAK-3.5	1248	NCR	NCR
Signal Generator	SMB100A	108362	2021/12/23	2022/12/22
USB wideband power sensor	U2021XA	MY52350001	2021/12/23	2022/12/22
Power Amplifier	CBA 1G-070	T44328	2021/12/23	2022/12/22
Linear Power Amplifier	AS0860-40/45	1060913	2021/12/23	2022/12/22
Directional Coupler	4223-20	3.113.277	2021/12/23	2022/12/22
6dB Attenuator	8493B 6dB Attenuator	2708A 04769	2021/12/23	2022/12/22
Spectrum Analyzer	FSV40	101949	2021/12/13	2022/12/12
Wideband Radio Communication Tester	CMW500	143458	2021/03/03	2022/03/02

SAR MEASUREMENT SYSTEM VERIFICATION

Liquid Verification

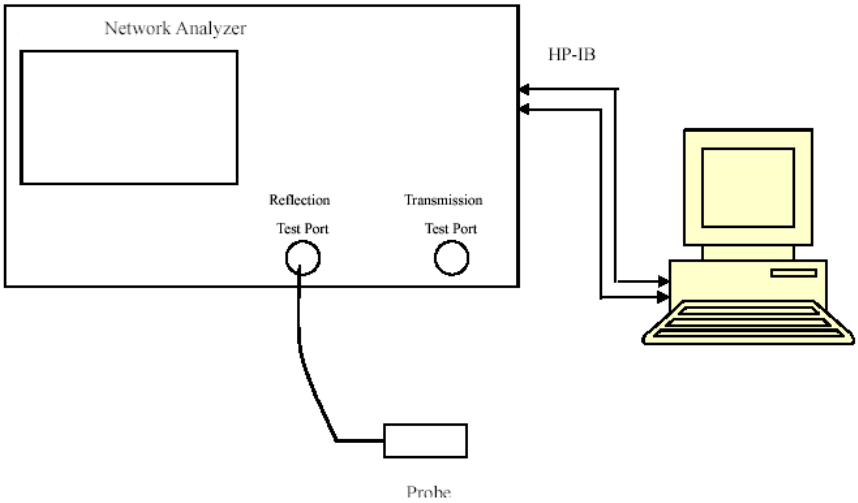

Liquid Verification Setup Block Diagram

Liquid Verification Results

Frequency (MHz)	Liquid Type	Liquid Parameter		Target Value		Delta (%)		Tolerance (%)
		ε_r	σ (S/m)	ε_r	σ (S/m)	$\Delta\varepsilon_r$	Δσ (S/m)	
704	Simulated Tissue Liquid	43.012	0.871	42.18	0.89	1.97	-2.13	±5
707.5	Simulated Tissue Liquid	42.964	0.875	42.16	0.89	1.91	-1.69	±5
711	Simulated Tissue Liquid	42.879	0.88	42.14	0.89	1.75	-1.12	±5
750	Simulated Tissue Liquid	42.816	0.876	41.90	0.89	2.19	-1.57	±5
824.2	Simulated Tissue Liquid	41.534	0.899	41.55	0.9	-0.04	-0.11	±5
826.4	Simulated Tissue Liquid	41.502	0.908	41.54	0.9	-0.09	0.89	±5
836.6	Simulated Tissue Liquid	42.07	0.928	41.5	0.9	1.37	3.11	±5
846.6	Simulated Tissue Liquid	41.782	0.935	41.5	0.91	0.68	2.75	±5
848.8	Simulated Tissue Liquid	41.4	0.939	41.5	0.91	-0.24	3.19	±5

**Liquid Verification above was performed on 2022/2/21.*

Frequency (MHz)	Liquid Type	Liquid Parameter		Target Value		Delta (%)		Tolerance (%)
		ε_r	σ (S/m)	ε_r	σ (S/m)	$\Delta\varepsilon_r$	Δσ (S/m)	
1720	Simulated Tissue Liquid	40.86	1.372	40.13	1.35	1.82	1.63	±5
1732.5	Simulated Tissue Liquid	39.767	1.37	40.12	1.36	-0.88	0.74	±5
1745	Simulated Tissue Liquid	39.819	1.382	40.1	1.37	-0.7	0.88	±5
1800	Simulated Tissue Liquid	39.305	1.39	40	1.4	-1.74	-0.71	±5

**Liquid Verification above was performed on 2022/2/22*

Frequency (MHz)	Liquid Type	Liquid Parameter		Target Value		Delta (%)		Tolerance (%)
		ε_r	σ (S/m)	ε_r	σ (S/m)	$\Delta\varepsilon_r$	Δσ (S/m)	
1850.2	Simulated Tissue Liquid	40.174	1.397	40	1.4	0.43	-0.21	±5
1852.4	Simulated Tissue Liquid	40.051	1.398	40	1.4	0.13	-0.14	±5
1860	Simulated Tissue Liquid	39.983	1.409	40	1.4	-0.04	0.64	±5
1880	Simulated Tissue Liquid	40.121	1.41	40	1.4	0.3	0.71	±5
1900	Simulated Tissue Liquid	39.525	1.437	40	1.4	-1.19	2.64	±5
1907.6	Simulated Tissue Liquid	39.577	1.44	40	1.4	-1.06	2.86	±5
1909.8	Simulated Tissue Liquid	39.504	1.448	40	1.4	-1.24	3.43	±5

**Liquid Verification above was performed on 2022/2/23.*

Frequency (MHz)	Liquid Type	Liquid Parameter		Target Value		Delta (%)		Tolerance (%)
		ε_r	σ (S/m)	ε_r	σ (S/m)	$\Delta\varepsilon_r$	Δσ	
2412	Simulated Tissue Liquid Head	38.646	1.814	39.28	1.77	-1.61	2.49	±5
2442	Simulated Tissue Liquid Head	38.451	1.834	39.22	1.79	-1.96	2.46	±5
2450	Simulated Tissue Liquid Head	38.5	1.849	39.20	1.80	-1.79	2.72	±5
2472	Simulated Tissue Liquid Head	38.292	1.851	39.17	1.82	-2.24	1.7	±5

**Liquid Verification above was performed on 2022/2/23.*

Frequency (MHz)	Liquid Type	Liquid Parameter		Target Value		Delta (%)		Tolerance (%)
		ε_r	σ (S/m)	ε_r	σ (S/m)	$\Delta\varepsilon_r$	Δσ (S/m)	
2510	Simulated Tissue Liquid Head	38.769	1.87	39.12	1.86	-0.9	0.54	±5
2535	Simulated Tissue Liquid Head	38.62	1.886	39.09	1.89	-1.2	-0.21	±5
2560	Simulated Tissue Liquid	39.921	1.912	39.05	1.92	2.23	-0.42	±5
2600	Simulated Tissue Liquid	39.745	1.941	39	1.96	1.91	-0.97	±5

**Liquid Verification above was performed on 2022/2/22.*

System Accuracy Verification

Prior to the assessment, the system validation kit was used to test whether the system was operating within its specifications of ±10%. The validation results are tabulated below. And also the corresponding SAR plot is attached as well in the SAR plots files.

The spacing distances in the **System Verification Setup Block Diagram** is given by the following:

a) s = 15 mm ± 0,2 mm for 300 MHz ≤ f ≤ 1 000 MHz;

b) s = 10 mm ± 0,2 mm for 1 000 MHz < f ≤ 3 000 MHz;

c) s = 10 mm ± 0,2 mm for 3 000 MHz < f ≤ 6 000 MHz.

System Verification Setup Block Diagram

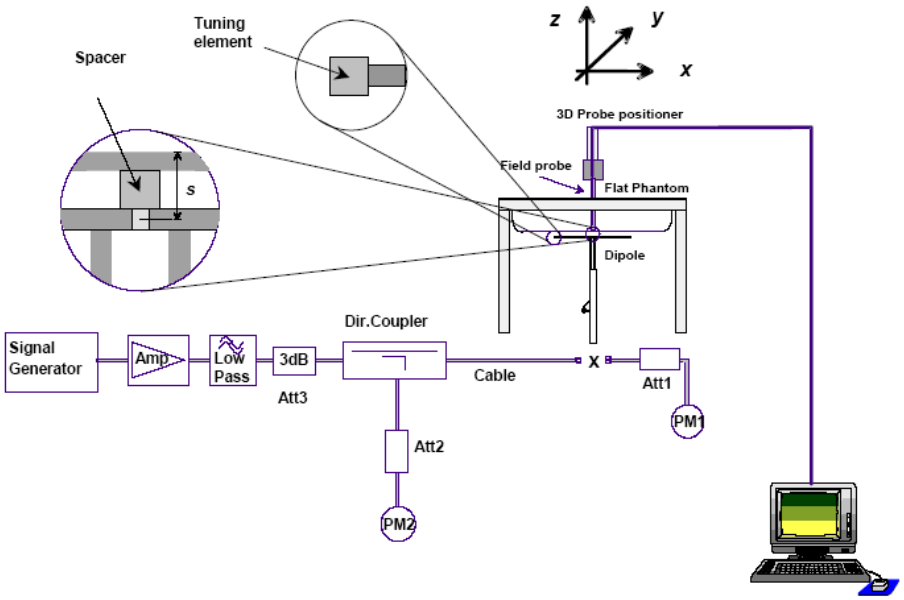

System Accuracy Check Results

Date	Frequency Band	Liquid Type	Input Power (mW)	Measured SAR (W/kg)		Normalized to 1W (W/kg)	Target Value (W/kg)	Delta (%)	Tolerance (%)
2022/2/21	750 MHz	Head	100	1g	0.811	8.11	8.55	-5.146	±10
2022/2/22	1800 MHz	Head	100	1g	4.28	42.8	39.3	8.906	±10
2022/2/23	1900 MHz	Head	100	1g	4.03	40.3	40.0	0.750	±10
2022/2/23	2450 MHz	Head	100	1g	4.97	49.7	53	-6.226	±10
2022/2/22	2600 MHz	Head	100	1g	6.03	60.3	55.4	8.845	±10

*The SAR values above are normalized to 1 Watt forward power.

SAR SYSTEM VALIDATION DATA

System Performance 750 MHz

DUT: Dipole 750MHz; Type: D750V3; Serial: 1194

Communication System: UID 0, CW (0); Frequency: 750 MHz;Duty Cycle: 1:1
Medium parameters used: f = 750 MHz; σ = 0.876 S/m; ε_r = 42.816; ρ = 1000 kg/m^3
Phantom section: Flat Section

DASY5 Configuration:

- Probe: EX3DV4- SN3619; ConvF(8.63, 8.63, 8.63); Calibrated: 2021/08/25
- Sensor-Surface: 4mm (Mechanical Surface Detection)
- Electronics: DAE4 Sn1562; Calibrated: 2021/12/13
- Phantom: Twin SAM; Type: QD000P40CD; Serial: TP:1744
- Measurement SW: DASY52, Version 52.10 (4); SEMCAD X Version 14.6.14 (7501)

System Performance Cheek at 750MHz/d=15mm, Pin=100mw/Area Scan (71x91x1): Interpolated grid: dx=1.500 mm, dy=1.500 mm
Maximum value of SAR (interpolated) = 0.856 W/kg

System Performance Cheek at 750MHz/d=15mm, Pin=100mw/Zoom Scan (7x7x7)/Cube 0: Measurement grid: dx=5mm, dy=5mm, dz=5mm
Reference Value = 31.26 V/m; Power Drift = -0.17 dB
Peak SAR (extrapolated) = 1.16 W/kg
SAR(1 g) = 0.811 W/kg; SAR(10 g) = 0.546 W/kg
Maximum value of SAR (measured) = 0.851 W/kg

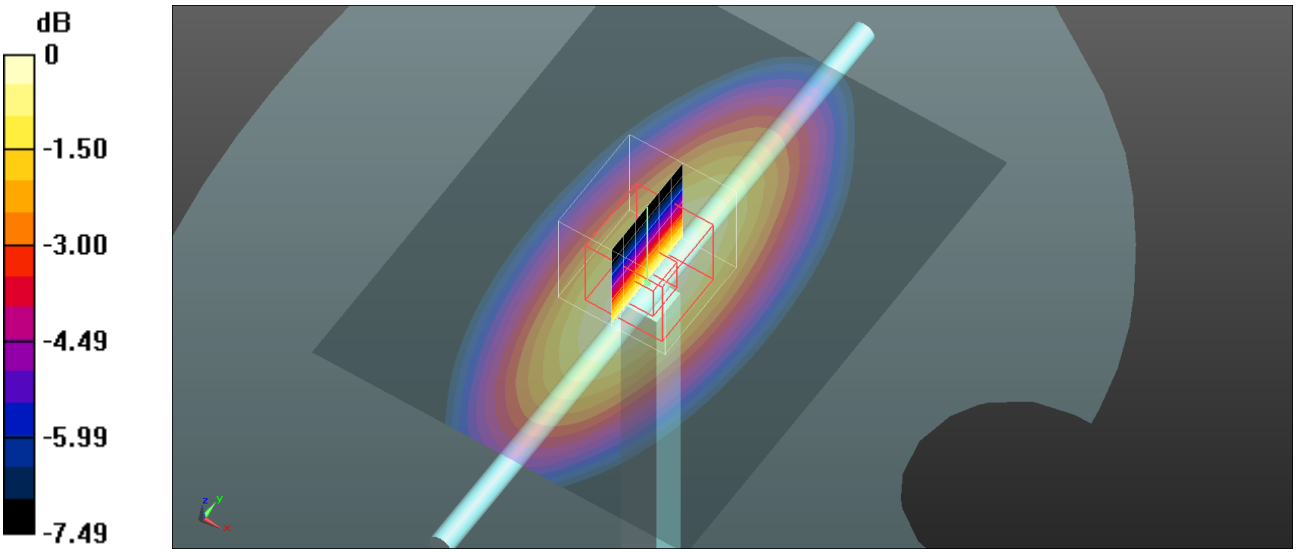

0 dB = 0.851 W/kg = -0.70 dBW/kg

System Performance 1800 MHz

DUT: D1800V2; Type: 1800MHz; Serial: 2d018

Communication System: UID 0, CW (0); Frequency: 1800 MHz;Duty Cycle: 1:1
Medium parameters used: f = 1800 MHz; σ = 1.39 S/m; ε_r = 39.305; ρ = 1000 kg/m^3
Phantom section: Flat Section

DASY5 Configuration:

- Probe: EX3DV4- SN3619; ConvF(7.33, 7.33, 7.33); Calibrated: 2021/08/25
- Sensor-Surface: 4mm (Mechanical Surface Detection)
- Electronics: DAE4 Sn1562; Calibrated: 2021/12/13
- Phantom: Twin SAM; Type: QD000P40CD; Serial: TP:1744
- Measurement SW: DASY52, Version 52.10 (4); SEMCAD X Version 14.6.14 (7501)

System Performance Cheek at 1800MHz/d=10mm, Pin=100mw/Area Scan (71x111x1): Interpolated grid: dx=1.500 mm, dy=1.500 mm
Maximum value of SAR (interpolated) = 4.57 W/kg
System Performance Cheek at 1800MHz/d=10mm, Pin=100mw/Zoom Scan (7x7x7)/Cube 0: Measurement grid: dx=5mm, dy=5mm, dz=5mm
Reference Value = 60.06 V/m; Power Drift = -0.11 dB
Peak SAR (extrapolated) = 6.26 W/kg
SAR(1 g) = 4.28 W/kg; SAR(10 g) = 2.33 W/kg
Maximum value of SAR (measured) = 4.66 W/kg

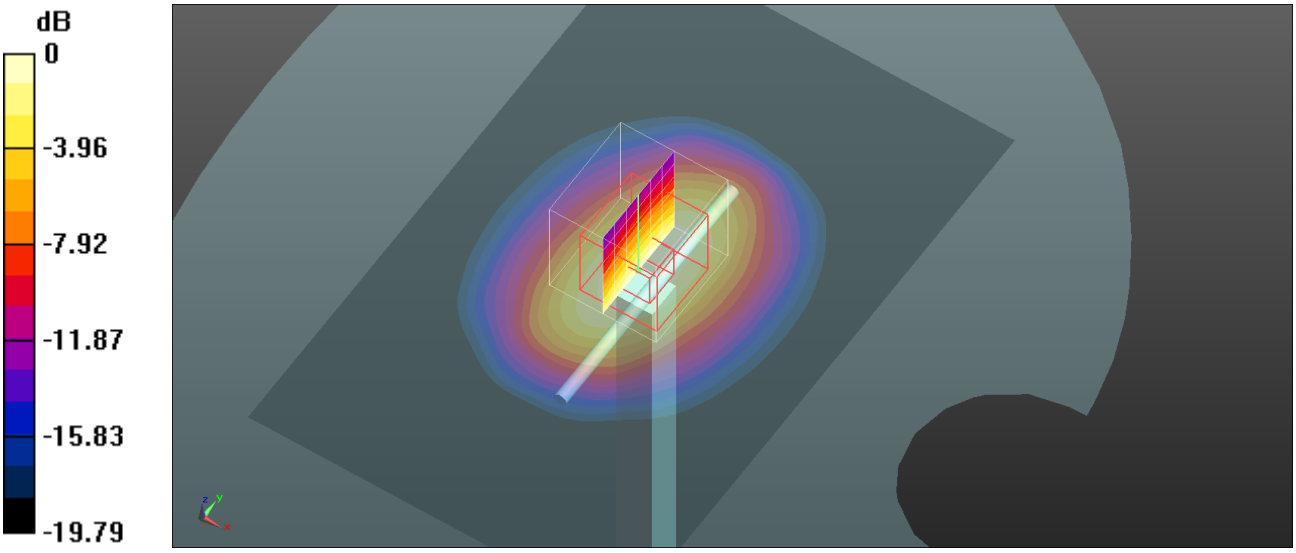

0 dB = 4.66 W/kg = 6.68 dBW/kg

System Performance 1900MHz

DUT: D1900V2; Type: 1900 MHz; Serial: 5d128

Communication System: UID 0, CW (0); Frequency: 1900 MHz;Duty Cycle: 1:1
Medium parameters used: f = 1900 MHz; σ = 1.437 S/m; ε_r =39.525; ρ = 1000 kg/m^3
Phantom section: Flat Section

DASY5 Configuration:

- Probe: EX3DV4- SN3619; ConvF(7.07, 7.07, 7.07); Calibrated: 2021/08/25
- Sensor-Surface: 4mm (Mechanical Surface Detection)
- Electronics: DAE4 Sn1562; Calibrated: 2021/12/13
- Phantom: Twin SAM; Type: QD000P40CD; Serial: TP:1744
- Measurement SW: DASY52, Version 52.10 (4); SEMCAD X Version 14.6.14 (7501)

System Performance Cheek at 1900MHz/d=10mm, Pin=100mw/Area Scan (71x111x1): Interpolated grid: dx=1.500 mm, dy=1.500 mm
Maximum value of SAR (interpolated) = 4.34 W/kg

System Performance Cheek at 1900MHz/d=10mm, Pin=100mw/Zoom Scan (7x7x7)/Cube 0: Measurement grid: dx=5mm, dy=5mm, dz=5mm
Reference Value = 60.55 V/m; Power Drift = -0.01 dB
Peak SAR (extrapolated) = 5.81 W/kg
SAR(1 g) = 4.03 W/kg; SAR(10 g) = 2.19 W/kg
Maximum value of SAR (measured) = 4.42 W/kg

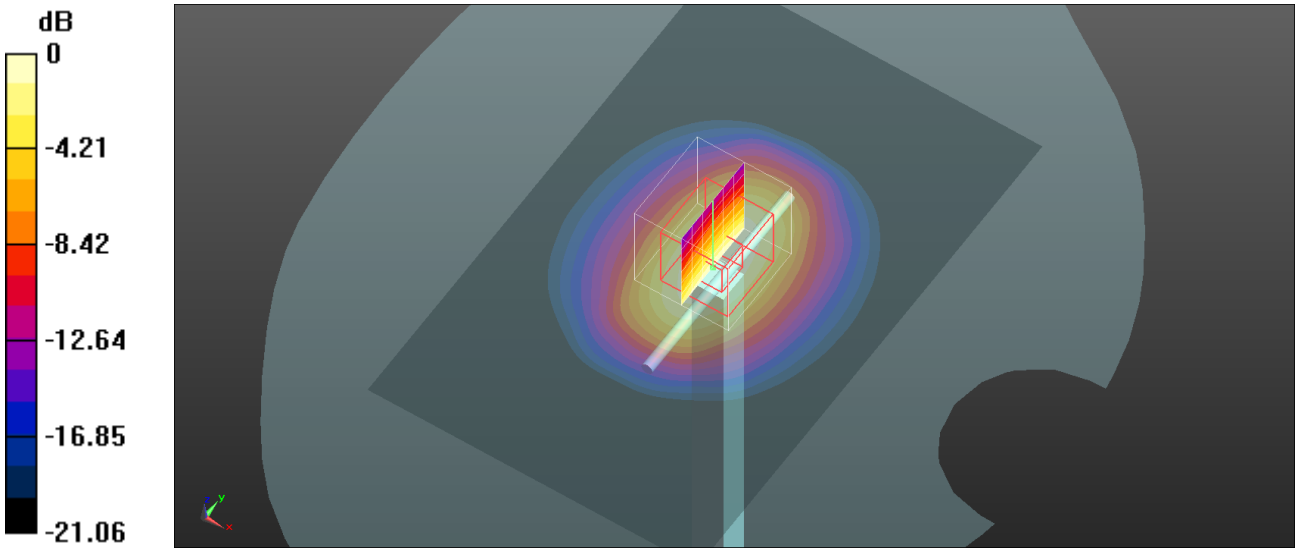

0 dB = 4.42 W/kg = 6.45 dBW/kg

System Performance 2450MHz

DUT: D2450V2; Type: 2450 MHz; Serial: 751

Communication System: UID 0, CW (0); Frequency: 2450 MHz;Duty Cycle: 1:1
Medium parameters used: f = 2450 MHz; σ = 1.849 S/m; ε_r = 38.5; ρ = 1000 kg/m^3
Phantom section: Flat Section

DASY5 Configuration:

- Probe: EX3DV4- SN3619; ConvF(6.69, 6.69, 6.69); Calibrated: 2021/08/25
- Sensor-Surface: 4mm (Mechanical Surface Detection)
- Electronics: DAE4 Sn1562; Calibrated: 2021/12/13
- Phantom: Twin SAM; Type: QD000P40CD; Serial: TP:1744
- Measurement SW: DASY52, Version 52.10 (4); SEMCAD X Version 14.6.14 (7501)

System Performance Cheek at 2450MHz/d=10mm, Pin=100mw/Area Scan (101x111x1): Interpolated grid: dx=1.000 mm, dy=1.000 mm
Maximum value of SAR (interpolated) = 5.61 W/kg

System Performance Cheek at 2450MHz/d=10mm, Pin=100mw/Zoom Scan (7x7x7)/Cube 0: Measurement grid: dx=5mm, dy=5mm, dz=5mm
Reference Value = 57.22 V/m; Power Drift = -0.03 dB
Peak SAR (extrapolated) = 8.11 W/kg
SAR(1 g) = 4.97 W/kg; SAR(10 g) = 2.49 W/kg
Maximum value of SAR (measured) = 5.59 W/kg

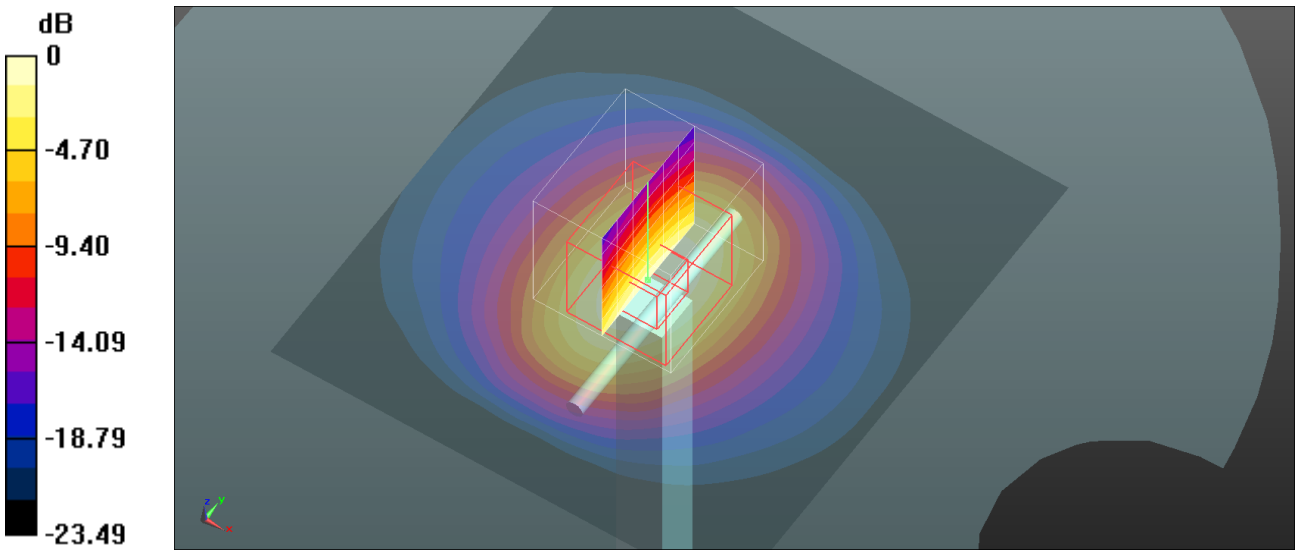

0 dB = 5.59 W/kg = 7.47 dBW/kg

System Performance 2600MHz

DUT: D2600V2; Type: 2600 MHz; Serial: 1162

Communication System: UID 0, CW (0); Frequency: 2600 MHz;Duty Cycle: 1:1
Medium parameters used: f = 2600 MHz; σ = 1.941 S/m; ε_r = 39.745; ρ = 1000 kg/m^3
Phantom section: Flat Section

DASY5 Configuration:

- Probe: EX3DV4- SN3619; ConvF(6.53, 6.53, 6.53); Calibrated: 2021/08/25
- Sensor-Surface: 4mm (Mechanical Surface Detection)
- Electronics: DAE4 Sn1562; Calibrated: 2021/12/13
- Phantom: Twin SAM; Type: QD000P40CD; Serial: TP:1744
- Measurement SW: DASY52, Version 52.10 (4); SEMCAD X Version 14.6.14 (7501)

System Performance Cheek at 2600MHz/d=10mm, Pin=100mw/Area Scan (101x131x1): Interpolated grid: dx=1.000 mm, dy=1.000 mm
Maximum value of SAR (interpolated) = 7.04 W/kg

System Performance Cheek at 2600MHz/d=10mm, Pin=100mw/Zoom Scan (7x7x7)/Cube 0: Measurement grid: dx=5mm, dy=5mm, dz=5mm
Reference Value = 62.52 V/m; Power Drift = -0.16 dB
Peak SAR (extrapolated) = 12.1 W/kg
SAR(1 g) = 6.03 W/kg; SAR(10 g) = 2.51 W/kg
Maximum value of SAR (measured) = 7.33 W/kg

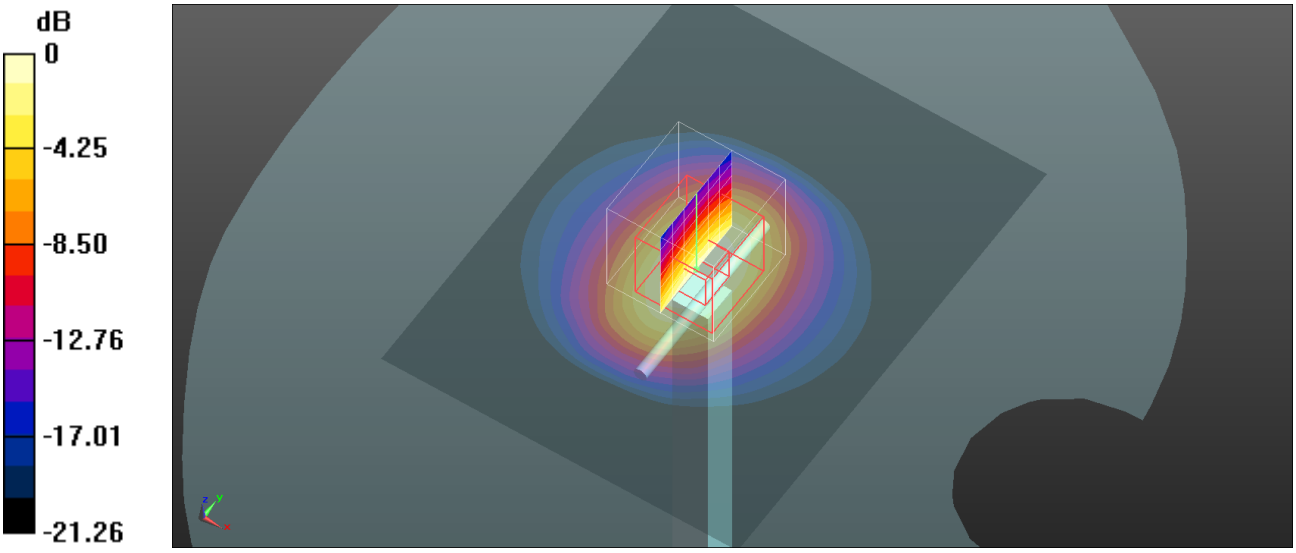

0 dB = 7.33 W/kg = 8.65 dBW/kg

EUT TEST STRATEGY AND METHODOLOGY

Test Positions for Device Operating Next to a Person's Ear

This category includes most wireless handsets with fixed, retractable or internal antennas located toward the top half of the device, with or without a foldout, sliding or similar keypad cover. The handset should have its earpiece located within the upper ¼ of the device, either along the centerline or off-centered, as perceived by its users. This type of handset should be positioned in a normal operating position with the "test device reference point" located along the "vertical centerline" on the front of the device aligned to the "ear reference point". The "test device reference point" should be located at the same level as the center of the earpiece region. The "vertical centerline" should bisect the front surface of the handset at its top and bottom edges. A "ear reference point" is located on the outer surface of the head phantom on each ear spacer. It is located 1.5 cm above the center of the ear canal entrance in the "phantom reference plane" defined by the three lines joining the center of each "ear reference point" (left and right) and the tip of the mouth.

A handset should be initially positioned with the earpiece region pressed against the ear spacer of a head phantom. For the SCC-34/SC-2 head phantom, the device should be positioned parallel to the "N-F" line defined along the base of the ear spacer that contains the "ear reference point". For interim head phantoms, the device should be positioned parallel to the cheek for maximum RF energy coupling. The "test device reference point" is aligned to the "ear reference point" on the head phantom and the "vertical centerline" is aligned to the "phantom reference plane". This is called the "initial ear position". While maintaining these three alignments, the body of the handset is gradually adjusted to each of the following positions for evaluating SAR:

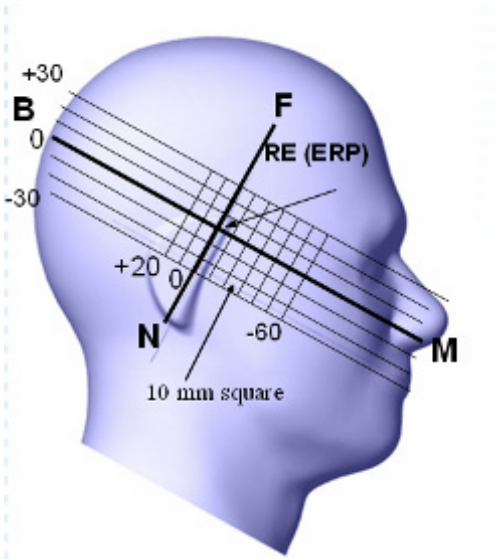

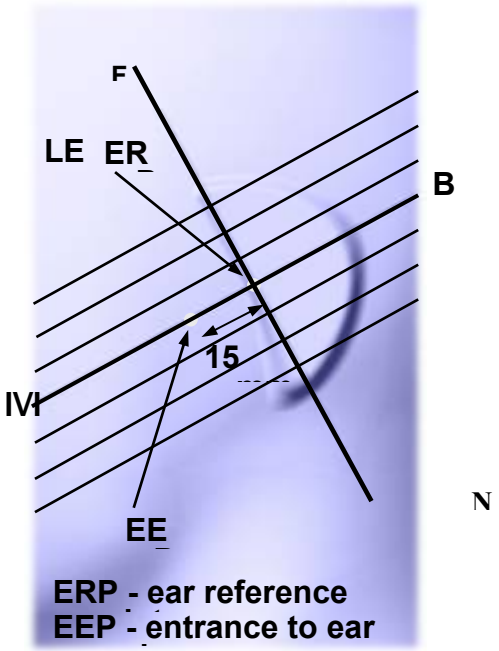

Cheek/Touch Position

The device is brought toward the mouth of the head phantom by pivoting against the "ear reference point" or along the "N-F" line for the SCC-34/SC-2 head phantom.

This test position is established:

When any point on the display, keypad or mouthpiece portions of the handset is in contact with the phantom.

(or) When any portion of a foldout, sliding or similar keypad cover opened to its intended self-adjusting normal use position is in contact with the cheek or mouth of the phantom.

For existing head phantoms – when the handset loses contact with the phantom at the pivoting point, rotation should continue until the device touches the cheek of the phantom or breaks its last contact from the ear spacer.

Cheek /Touch Position

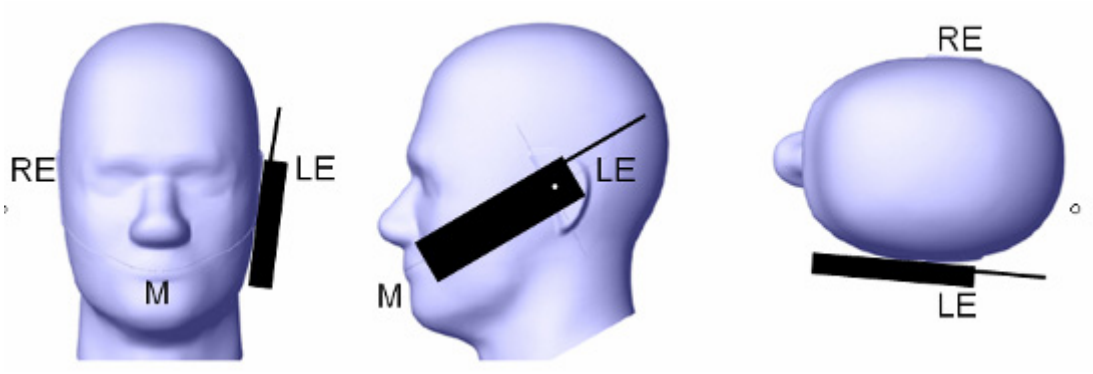

Ear/Tilt Position

With the handset aligned in the "Cheek/Touch Position":

1) If the earpiece of the handset is not in full contact with the phantom's ear spacer (in the "Cheek/Touch position") and the peak SAR location for the "Cheek/Touch" position is located at the ear spacer region or corresponds to the earpiece region of the handset, the device should be returned to the "initial ear position" by rotating it away from the mouth until the earpiece is in full contact with the ear spacer.

2) (otherwise) The handset should be moved (translated) away from the cheek perpendicular to the line passes through both "ear reference points" (note: one of these ear reference points may not physically exist on a split head model) for approximate 2-3 cm. While it is in this position, the device handset is tilted away from the mouth with respect to the "test device reference point" until the inside angle between the vertical centerline on the front surface of the phone and the horizontal line passing through the ear reference point is by 15 80°. After the tilt, it is then moved (translated) back toward the head perpendicular to the line passes through both "ear reference points" until the device touches the phantom or the ear spacer. If the antenna touches the head first, the positioning process should be repeated with a tilt angle less than 15° so that the device and its antenna would touch the phantom simultaneously. This test position may require a device holder or positioner to achieve the translation and tilting with acceptable positioning repeatability.

If a device is also designed to transmit with its keypad cover closed for operating in the head position, such positions should also be considered in the SAR evaluation. The device should be tested on the left and right side of the head phantom in the "Cheek/Touch" and "Ear/Tilt" positions. When applicable, each configuration should be tested with the antenna in its fully extended and fully retracted positions. These test configurations should be tested at the high, middle and low frequency channels of each operating mode; for example, AMPS, CDMA, and TDMA. If the SAR measured at the middle channel for each test configuration (left, right, Cheek/Touch, Tilt/Ear, extended and retracted) is at least 2.0 dB lower than the SAR limit, testing at the high and low channels is optional for such test configuration(s). If the transmission band of the test device is less than 10 MHz, testing at the high and low frequency channels is optional.

Ear /Tilt 15° Position

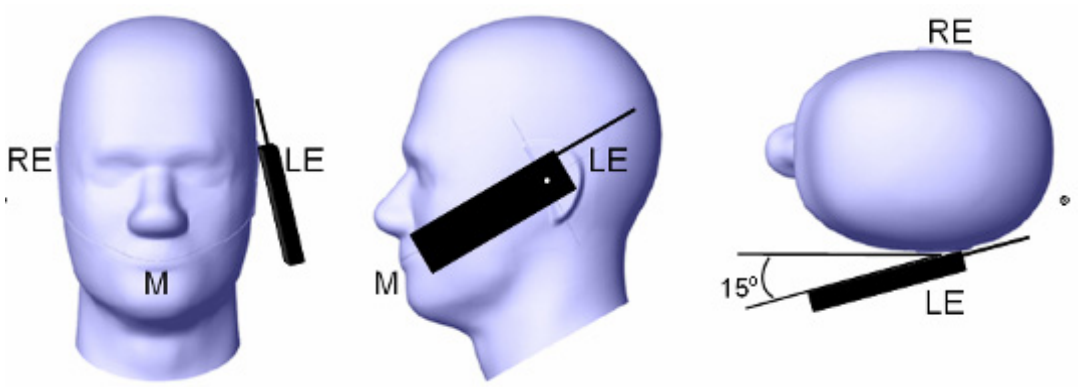

Test positions for body-worn and other configurations

Body-worn operating configurations should be tested with the belt-clips and holsters attached to the device and positioned against a flat phantom in normal use configurations. Devices with a headset output should be tested with a headset connected to the device. When multiple accessories that do not contain metallic components are supplied with the device, the device may be tested with only the accessory that dictates the closest spacing to the body. When multiple accessories that contain metallic components are supplied with the device, the device must be tested with each accessory that contains a unique metallic component. If multiple accessories share an identical metallic component (e.g., the same metallic belt-clip used with different holsters with no other metallic components), only the accessory that dictates the closest spacing to the body must be tested.

Body-worn accessories may not always be supplied or available as options for some devices that are intended to be authorized for body-worn use. A separation distance of 1.5 cm between the back of the device and a flat phantom is recommended for testing body-worn SAR compliance under such circumstances. Other separation distances may be used, but they should not exceed 2.5 cm. In these cases, the device may use body-worn accessories that provide a separation distance greater than that tested for the device provided however that the accessory contains no metallic components.

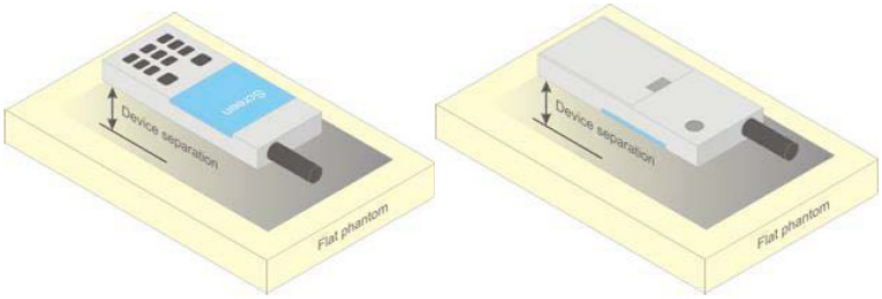

Figure 5 – Test positions for body-worn devices

Test Distance for SAR Evaluation

For this case the EUT(Equipment Under Test) is set 10mm away from the phantom, the test distance is 10mm.

SAR Evaluation Procedure

The evaluation was performed with the following procedure:

Step 1: Measurement of the SAR value at a fixed location above the ear point or central position was used as a reference value for assessing the power drop. The SAR at this point is measured at the start of the test and then again at the end of the testing.

Step 2: The SAR distribution at the exposed side of the head was measured at a distance of 4 mm from the inner surface of the shell. The area covered the entire dimension of the head or radiating structures of the EUT, the horizontal grid spacing was 15 mm x 15 mm, and the SAR distribution was determined by integrated grid of 1.5mm x 1.5mm. Based on these data, the area of the maximum absorption was determined by spline interpolation. The first Area Scan covers the entire dimension of the EUT to ensure that the hotspot was correctly identified.

Step 3: Around this point, a volume of 30 mm x 30 mm x 30 mm was assessed by measuring 7x 7 x 7 points. On the basis of this data set, the spatial peak SAR value was evaluated under the following procedure:

1) The data at the surface were extrapolated, since the center of the dipoles is 1.2 mm away from the tip of the probe and the distance between the surface and the lowest measuring point is 1.3 mm. The extrapolation was based on a least square algorithm. A polynomial of the fourth order was calculated through the points in z-axes. This polynomial was then used to evaluate the points between the surface and the probe tip.

2) The maximum interpolated value was searched with a straightforward algorithm. Around this maximum the SAR values averaged over the spatial volumes (1 g or 10 g) were computed by the 3D-Spline interpolation algorithm. The 3D-Spline is composed of three one dimensional splines with the “Not a knot"-condition (in x, y and z-directions). The volume was integrated with the trapezoidal-algorithm. One thousand points (10 x 10 x 10) were interpolated to calculate the averages.

All neighboring volumes were evaluated until no neighboring volume with a higher average value was found.

Step 4: Re-measurement of the SAR value at the same location as in Step 1. If the value changed by more than 5%, the evaluation was repeated.

CONDUCTED OUTPUT POWER MEASUREMENT

Test Procedure

The RF output of the transmitter was connected to the input of the Spectrum Analyzer through Connector.

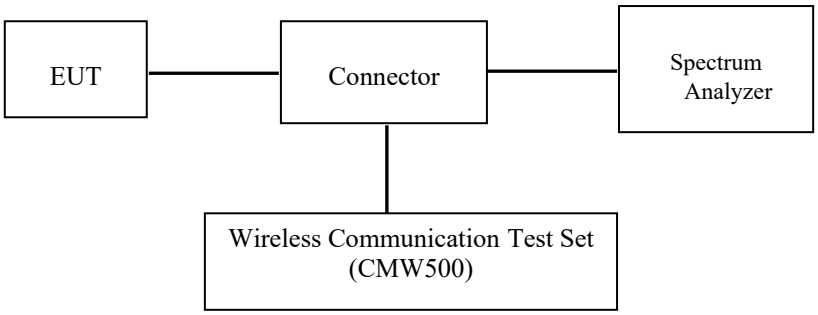

GSM/WCDMA/LTE

Radio Configuration

The power measurement was configured by the Wireless Communication Test Set.

GSM/GPRS/EGPRS

Function: Menu select > GSM Mobile Station > GSM 850/1900
Press Connection control to choose the different menus
Press RESET > choose all the reset all settings
Connection Press Signal Off to turn off the signal and change settings
Network Support > GSM + GPRS or GSM + EGSM
Main Service > Packet Data
Service selection > Test Mode A – Auto Slot Config. off
MS Signal Press Slot Config Bottom on the right twice to select and change the number of time slots and power setting
> Slot configuration > Uplink/Gamma
> 33 dBm for GPRS 850
> 30 dBm for GPRS 1900
> 27 dBm for EGPRS 850
> 26 dBm for EGPRS 1900
BS Signal Enter the same channel number for TCH channel (test channel) and BCCH channel
Frequency Offset > + 0 Hz
Mode > BCCH and TCH
BCCH Level > -85 dBm (May need to adjust if link is not stabe)
BCCH Channel > choose desire test channel [Enter the same channel number for TCH channel (test channel) and BCCH channel]

Channel Type > Off
P0 > 4 dB
Slot Config >Unchanged (if already set under MS signal)
TCH > choose desired test channel
Hopping > Off

Main Timeslot > 3
Network Coding Scheme > CS4 (GPRS) and MCS5 (EGPRS)
Bit Stream >2E9-1 PSR Bit Stream
AF/RF Enter appropriate offsets for Ext. Att. Output and Ext. Att. Input
Connection Press Signal on to turn on the signal and change settings

WCDMA Release 99

The following tests were conducted according to the test requirements outlines in section 5.2 of the 3GPP TS34.121-1 specification. The EUT has a nominal maximum output power of 24dBm (+1.7/-3.7).

WCDMA General Settings	Loopback Mode	Test Mode 1
	Rel99 RMC	12.2kbps RMC
	Power Control Algorithm	Algorithm2
	β_c/β_d	8/15

HSDPA

The following tests were conducted according to the test requirements outlines in section 5.2 of the 3GPP TS34.121-1 specification.

	Mode	HSDPA	HSDPA	HSDPA	HSDPA
	Subset	1	2	3	4
WCDMA General Settings	Loopback Mode	Test Mode 1			
	Rel99 RMC	12.2kbps RMC			
	HSDPA FRC	H-Set1			
	Power Control Algorithm	Algorithm2			
	β_c	2/15	12/15	15/15	15/15
	β_d	15/15	15/15	8/15	4/15
	β_d(SF)	64			
	β_c/β_d	2/15	12/15	15/8	15/4
	β_{hs}	4/15	24/15	30/15	30/15
	MPR(dB)	0	0	0.5	0.5
HSDPA Specific Settings	DACK	8			
	DNAK	8			
	DCQI	8			
	Ack-Nack repetition factor	3			
	CQI Feedback	4ms			
	CQI Repetition Factor	2			
	Ahs=βhs/ βc	30/15			

HSUPA

The following tests were conducted according to the test requirements outlines in section 5.2 of the 3GPP TS34.121-1 specification.

	Mode	**HSUPA**	**HSUPA**	**HSUPA**	**HSUPA**	**HSUPA**
	Subset	**1**	**2**	**3**	**4**	**5**
WCDMA General Settings	Loopback Mode	Test Mode 1				
	Rel99 RMC	12.2kbps RMC				
	HSDPA FRC	H-Set1				
	HSUPA Test	HSUPA Loopback				
	Power Control Algorithm	Algorithm2				
	β_c	11/15	6/15	15/15	2/15	15/15
	β_d	15/15	15/15	9/15	15/15	0
	β_{ec}	209/225	12/15	30/15	2/15	5/15
	β_c/β_d	11/15	6/15	15/9	2/15	-
	β_{hs}	22/15	12/15	30/15	4/15	5/15
	CM(dB)	1.0	3.0	2.0	3.0	1.0
	MPR(dB)	0	2	1	2	0
HSDPA Specific Settings	DACK	8				
	DNAK	8				
	DCQI	8				
	Ack-Nack repetition factor	3				
	CQI Feedback	4ms				
	CQI Repetition Factor	2				
	Ahs=β_{hs}/β_c	30/15				
HSUPA Specific Settings	DE-DPCCH	6	8	8	5	7
	DHARQ	0	0	0	0	0
	AG Index	20	12	15	17	21
	ETFCI	75	67	92	71	81
	Associated Max UL Data Rate kbps	242.1	174.9	482.8	205.8	308.9
	Reference E_FCls	E-TFCI 11 E E-TFCI PO 4 E-TFCI 67 E-TFCI PO 18 E-TFCI 71 E-TFCI PO23 E-TFCI 75 E-TFCI PO26 E-TFCI 81 E-TFCI PO 27		E-TFCI 11 E-TFCI PO4 E-TFCI 92 E-TFCI PO 18	E-TFCI 11 E E-TFCI PO 4 E-TFCI 67 E-TFCI PO 18 E-TFCI 71 E-TFCI PO23 E-TFCI 75 E-TFCI PO26 E-TFCI 81 E-TFCI PO 27	

HSPA+

Sub-test	β_c (Note3)	β_d	β_{HS} (Note1)	β_{ec}	β_{ed} (2xSF2) (Note 4)	β_{ed} (2xSF4) (Note 4)	CM (dB) (Note 2)	MPR (dB) (Note 2)	AG Index (Note 4)	E-TFCI (Note 5)	E-TFCI (boost)
1	1	0	30/15	30/15	$\beta_{ed}1$: 30/15 $\beta_{ed}2$: 30/15	$\beta_{ed}3$: 24/15 $\beta_{ed}4$: 24/15	3.5	2.5	14	105	105

Note 1: Δ_{ACK}, Δ_{NACK} and Δ_{CQI} = 30/15 with β_{hs} = 30/15 * β_c .
Note 2: CM = 3.5 and the MPR is based on the relative CM difference, MPR = MAX(CM-1,0).
Note 3: DPDCH is not configured, therefore the β_c is set to 1 and β_d = 0 by default.
Note 4: β_{ed} can not be set directly; it is set by Absolute Grant Value.
Note 5: All the sub-tests require the UE to transmit 2SF2+2SF4 16QAM EDCH and they apply for UE using E-DPDCH category 7. E-DCH TTI is set to 2ms TTI and E-DCH table index = 2. To support these E-DCH configurations DPDCH is not allocated. The UE is signalled to use the extrapolation algorithm.

The following tests were conducted according to the test requirements in Table C.11.1.4 of 3GPP TS 34.121-1

FDD-LTE

For UE Power Class 1 and 3, the allowed Maximum Power Reduction (MPR) for the maximum output power in Table 6.2.2-1due to higher order modulation and transmit bandwidth configuration (resource blocks) is specified in Table 6.2.3-1.

Table 6.2.3-1: Maximum Power Reduction (MPR) for Power Class 1 and 3

Modulation	Channel bandwidth / Transmission bandwidth (N_{RB})						MPR (dB)
	1.4 MHz	3.0 MHz	5 MHz	10 MHz	15 MHz	20 MHz	
QPSK	> 5	> 4	> 8	> 12	> 16	> 18	≤ 1
16 QAM	≤ 5	≤ 4	≤ 8	≤ 12	≤ 16	≤ 18	≤ 1
16 QAM	> 5	> 4	> 8	> 12	> 16	> 18	≤ 2

For UE Power Class 1 and 3 the specific requirements and identified sub clauses are specified in Table 6.2.4-1 along with the allowed A-MPR values that may be used to meet these requirements. The allowed A-MPR values specified below in Table 6.2.4.-1 to 6.2.4-15 are in addition to the allowed MPR requirements specified in sub clause 6.2.3.

Table 6.2.4-1: Additional Maximum Power Reduction (A-MPR)

Network Signalling value	Requirements (subclause)	E-UTRA Band	Channel bandwidth (MHz)	Resources Blocks (N_{RB})	A-MPR (dB)
NS_01	6.6.2.1.1	Table 5.5-1	1.4, 3, 5, 10, 15, 20	Table 5.6-1	N/A
NS_03	6.6.2.2.1	2, 4,10, 23, 25, 35, 36	3	>5	≤ 1
			5	>6	≤ 1
			10	>6	≤ 1
			15	>8	≤ 1
			20	>10	≤ 1
NS_04	6.6.2.2.2	41	5	>6	≤ 1
			10, 15, 20	Table 6.2.4-4	
NS_05	6.6.3.3.1	1	10,15,20	≥ 50	≤ 1
NS_06	6.6.2.2.3	12, 13, 14, 17	1.4, 3, 5, 10	Table 5.6-1	N/A
NS_07	6.6.2.2.3 6.6.3.3.2	13	10	Table 6.2.4-2	
NS_08	6.6.3.3.3	19	10, 15	> 44	≤ 3
NS_09	6.6.3.3.4	21	10, 15	> 40	≤ 1
				> 55	≤ 2
NS_10		20	15, 20	Table 6.2.4-3	
NS_11	6.6.2.2.1	23	1.4, 3, 5, 10, 15, 20	Table 6.2.4-5	
NS_12	6.6.3.3.5	26	1.4, 3, 5	Table 6.2.4-6	
NS_13	6.6.3.3.6	26	5	Table 6.2.4-7	
NS_14	6.6.3.3.7	26	10, 15	Table 6.2.4-8	
NS_15	6.6.3.3.8	26	1.4, 3, 5, 10, 15	Table 6.2.4-9 Table 6.2.4-10	
NS_16	6.6.3.3.9	27	3, 5, 10	Table 6.2.4-11, Table 6.2.4-12, Table 6.2.4-13	
NS_17	6.6.3.3.10	28	5, 10	Table 5.6-1	N/A
NS_18	6.6.3.3.11	28	5	≥ 2	≤ 1
			10, 15, 20	≥ 1	≤ 4
NS_19	6.6.3.3.12	44	10, 15, 20	Table 6.2.4-14	
NS_20	6.2.2 6.6.2.2.1 6.6.3.2	23	5, 10, 15, 20	Table 6.2.4-15	
...					
NS_32	-	-	-	-	-

Maximum Target Output Power

Max Target Power(dBm)			
Mode/Band	**Channel**		
	Low	**Middle**	**High**
GSM 850	34.0	34.0	34.0
GPRS 1 TX Slot	34.0	34.0	34.0
GPRS 2 TX Slot	33.0	33.0	33.0
GPRS 3 TX Slot	31.5	31.5	31.5
GPRS 4 TX Slot	30.0	30.0	30.0
PCS 1900	29.5	29.5	29.5
GPRS 1 TX Slot	29.5	29.5	29.5
GPRS 2 TX Slot	29.0	29.0	29.0
GPRS 3 TX Slot	27.0	27.0	27.0
GPRS 4 TX Slot	26.0	26.0	26.0
WCDMA Band 2	21.0	21.0	21.0
HSDPA	21.0	21.0	21.0
HSUPA	21.0	21.0	21.0
HSPA+	21.0	21.0	21.0
WCDMA Band 5	23.0	23.0	23.0
HSDPA	22.0	22.0	22.0
HSUPA	22.0	22.0	22.0
HSPA+	22.0	22.0	22.0
LTE Band 2	24.5	24.5	24.5
LTE Band 4	25.0	25.0	25.0
LTE Band 7	20.0	20.0	20.0
LTE Band 12	24.5	24.5	24.5
LTE Band 17	24.5	24.5	24.5
WLAN 2.4G	13.0	13.0	13.0
Bluetooth BDR/EDR	4.5	4.5	4.5
BLE	5.5	5.5	5.5

Test Results:

GSM:

Band	Channel No.	Frequency (MHz)	RF Output Power (dBm)
GSM 850	128	824.2	32.37
	190	836.6	32.55
	251	848.8	32.71
PCS 1900	512	1850.2	29.41
	661	1880	29.16
	810	1909.8	28.85

GPRS:

Band	Channel No.	Frequency (MHz)	RF Output Power (dBm)			
			1 slot	2 slots	3 slots	4 slots
GSM 850	128	824.2	33.47	32.61	30.72	29.46
	190	836.6	33.55	32.95	31.17	29.73
	251	848.8	33.62	32.74	30.94	29.62
PCS 1900	512	1850.2	29.33	28.60	26.71	25.60
	661	1880	29.11	28.30	26.45	25.06
	810	1909.8	28.76	28.02	26.05	24.70

For SAR, the time based average power is relevant, the difference in between depends on the duty cycle of the TDMA signal.

Number of Time slot	1	2	3	4
Duty Cycle	1:8	1:4	1:2.66	1:2
Time based Ave. power compared to slotted Ave. power	-9 dB	-6 dB	-4.25 dB	-3 dB
Crest Factor	8	4	2.66	2

The time based average power for GPRS

Band	Channel No.	Frequency (MHz)	RF Output Power (dBm)			
			1 slot	2 slots	3 slots	4 slots
GSM 850	128	824.2	24.47	26.61	26.47	26.46
	190	836.6	24.55	**26.95**	26.92	26.73
	251	848.8	24.62	26.74	26.69	26.62
PCS 1900	512	1850.2	20.33	**22.60**	22.46	22.60
	661	1880	20.11	22.30	22.20	22.06
	810	1909.8	19.76	22.02	21.80	21.70

Note:

1. Rohde & Schwarz Radio Communication Tester (CMU200) was used for the measurement of GSM peak and average output power for active timeslots.
2 .For GSM voice, 1 timeslot has been activated with power level 5 (850 MHz band) and 0 (1900 MHz band).
3 .For GPRS, 1, 2, 3 and 4 timeslots has been activated separately with power level 3(850 MHz band) and 3(1900 MHz band).

WCDMA Band 2:

Test Condition	Test Mode	3GPP Sub Test	Averaged Mean Power (dBm)		
			Low Frequency	Mid Frequency	High Frequency
Normal	RMC12.2k		**20.63**	20.40	20.33
	HSDPA	1	**19.49**	19.42	19.21
		2	19.27	19.11	19.02
		3	19.31	19.39	19.02
		4	19.09	18.90	18.98
	HSUPA	1	18.99	**19.46**	19.00
		2	18.99	19.34	18.88
		3	19.00	19.35	18.97
		4	18.84	19.24	18.82
		5	18.87	19.47	18.85
	HSPA+	1	19.46	**19.49**	19.27

WCDMA Band 5:

Test Condition	Test Mode	3GPP Sub Test	Averaged Mean Power (dBm)		
			Low Frequency	Mid Frequency	High Frequency
Normal	RMC12.2k		22.62	22.80	**22.88**
	HSDPA	1	21.42	21.64	**21.84**
		2	21.35	21.26	21.79
		3	21.16	21.50	21.70
		4	21.21	21.16	21.73
	HSUPA	1	20.99	21.64	21.67
		2	20.83	21.63	21.51
		3	20.74	21.44	21.67
		4	20.78	21.40	21.56
		5	20.87	21.60	**21.78**
	HSPA+	1	**20.70**	20.44	20.63

Note:

1. The default test configuration is to measure SAR with an established radio link between the EUT and a communication test set using a 12.2 kbps RMC (reference measurement Channel) Configured in Test Loop Model 1.
2. KDB 941225 D01-Body SAR is not required for HSDPA/HSUPA/ HSPA+ when the maximum average output of each RF channel is less than ¼ dB higher than measured 12.2kbps RMC or the maximum SAR for 12.2kbps RMC is < 75% of SAR limit.

LTE Band 2:

Test Bandwidth	Test Modulation	Resource Block & RB offset	Target MPR	Meas MPR	Low Channel (dBm)	Middle Channel (dBm)	High Channel (dBm)
1.4M	QPSK	RB1#0	0	0	24.12	22.96	22.75
		RB1#3	0	0	24.00	22.81	22.49
		RB1#5	0	0	23.97	22.87	22.48
		RB3#0	1	1	24.00	22.91	22.70
		RB3#3	1	1	24.01	22.92	22.66
		RB6#0	1	1	23.21	22.02	22.04
	16-QAM	RB1#0	1	1	22.89	22.13	21.84
		RB1#3	1	1	22.85	21.93	21.68
		RB1#5	1	1	23.06	22.10	21.71
		RB3#0	2	2	23.18	21.80	21.94
		RB3#3	2	2	23.15	21.81	21.78
		RB6#0	2	2	22.04	21.04	21.07
3M	QPSK	RB1#0	0	0	23.91	22.99	22.95
		RB1#8	0	0	23.79	22.66	22.63
		RB1#14	0	0	23.99	22.83	22.43
		RB6#0	1	1	23.16	21.92	22.15
		RB6#9	1	1	23.10	21.89	21.90
		RB15#0	1	1	23.16	21.94	22.10
	16-QAM	RB1#0	1	1	23.34	22.04	21.94
		RB1#8	1	1	23.25	21.85	21.79
		RB1#14	1	1	23.39	22.04	21.54
		RB6#0	2	2	22.03	20.91	21.22
		RB6#9	2	2	22.13	21.01	20.96
		RB15#0	2	2	22.11	20.89	21.28
5M	QPSK	RB1#0	0	0	23.69	22.69	22.60
		RB1#13	0	0	23.39	22.33	22.18
		RB1#24	0	0	23.59	22.82	22.18
		RB15#0	1	1	22.81	21.47	21.76
		RB15#10	1	1	22.89	21.44	21.72
		RB25#0	1	1	22.79	21.55	21.74
	16-QAM	RB1#0	1	1	22.59	21.97	21.75
		RB1#13	1	1	22.39	21.49	21.51
		RB1#24	1	1	22.61	22.13	21.43
		RB15#0	2	2	21.78	20.42	20.70
		RB15#10	2	2	21.92	20.56	20.82
		RB25#0	2	2	21.82	20.61	20.76

Test Bandwidth	Test Modulation	Resource Block & RB offset	Target MPR	Meas MPR	Low Channel (dBm)	Middle Channel (dBm)	High Channel (dBm)
10M	QPSK	RB1#0	0	0	23.12	21.99	21.65
		RB1#25	0	0	23.25	22.20	22.09
		RB1#49	0	0	22.52	22.31	21.95
		RB25#0	1	1	22.65	21.34	20.95
		RB25#25	1	1	22.22	21.46	21.46
		RB50#0	1	1	22.59	21.30	21.20
	16-QAM	RB1#0	1	1	22.59	21.04	20.45
		RB1#25	1	1	22.85	21.33	21.14
		RB1#49	1	1	22.19	21.51	21.03
		RB25#0	2	2	21.77	20.33	19.91
		RB25#25	2	2	21.44	20.66	20.69
		RB50#0	2	2	21.61	20.57	20.24
15M	QPSK	RB1#0	0	0	23.32	22.05	22.33
		RB1#38	0	0	23.01	22.01	21.69
		RB1#74	0	0	22.34	22.79	21.99
		RB36#0	1	1	22.71	21.13	20.84
		RB36#39	1	1	21.81	21.68	21.35
		RB75#0	1	1	22.19	21.44	20.95
	16-QAM	RB1#0	1	1	22.84	21.24	21.63
		RB1#38	1	1	22.52	21.24	21.04
		RB1#74	1	1	21.86	21.92	21.30
		RB36#0	2	2	21.70	20.16	19.95
		RB36#39	2	2	20.83	20.81	20.26
		RB75#0	2	2	21.34	20.60	20.03
20M	QPSK	RB1#0	0	0	23.48	22.21	22.83
		RB1#50	0	0	22.69	22.08	21.51
		RB1#99	0	0	21.95	22.48	21.96
		RB50#0	1	1	22.44	21.05	21.30
		RB50#50	1	1	21.50	21.66	20.99
		RB100#0	1	1	21.89	21.46	21.06
	16-QAM	RB1#0	1	1	22.69	21.31	22.32
		RB1#50	1	1	21.97	21.24	21.05
		RB1#99	1	1	21.31	21.76	21.51
		RB50#0	2	2	21.40	20.20	20.36
		RB50#50	2	2	20.49	20.63	20.09
		RB100#0	2	2	21.01	20.48	20.18

LTE Band 4:

Test Bandwidth	Test Modulation	Resource Block & RB offset	Target MPR	Meas MPR	Low Channel (dBm)	Middle Channel (dBm)	High Channel (dBm)
1.4M	QPSK	RB1#0	0	0	24.45	24.03	23.94
		RB1#3	0	0	24.39	23.83	23.55
		RB1#5	0	0	24.51	23.95	23.45
		RB3#0	1	1	24.41	23.96	23.74
		RB3#3	1	1	24.39	23.98	23.49
		RB6#0	1	1	23.49	23.02	22.76
	16-QAM	RB1#0	1	1	23.36	23.17	22.96
		RB1#3	1	1	23.42	23.02	22.62
		RB1#5	1	1	23.36	23.07	22.54
		RB3#0	2	2	23.60	22.93	22.93
		RB3#3	2	2	23.59	23.04	22.71
		RB6#0	2	2	22.45	22.11	21.89
3M	QPSK	RB1#0	0	0	24.52	24.05	24.59
		RB1#8	0	0	24.34	23.89	23.77
		RB1#14	0	0	24.44	23.76	23.29
		RB6#0	1	1	23.47	23.09	23.45
		RB6#9	1	1	23.41	23.03	22.79
		RB15#0	1	1	23.40	22.93	23.14
	16-QAM	RB1#0	1	1	23.74	23.20	23.55
		RB1#8	1	1	23.77	23.03	22.83
		RB1#14	1	1	23.76	23.02	22.53
		RB6#0	2	2	22.48	22.21	22.50
		RB6#9	2	2	22.45	22.08	22.01
		RB15#0	2	2	22.54	22.09	22.49
5M	QPSK	RB1#0	0	0	24.51	24.18	24.70
		RB1#13	0	0	23.98	23.52	23.75
		RB1#24	0	0	24.30	23.72	23.28
		RB15#0	1	1	23.36	22.71	23.43
		RB15#10	1	1	23.24	22.54	22.94
		RB25#0	1	1	23.27	22.56	23.11
	16-QAM	RB1#0	1	1	23.22	23.27	23.79
		RB1#13	1	1	22.86	22.78	22.90
		RB1#24	1	1	23.21	22.94	22.63
		RB15#0	2	2	22.42	21.74	22.56
		RB15#10	2	2	22.37	21.55	21.94
		RB25#0	2	2	22.33	21.68	22.21

Test Bandwidth	Test Modulation	Resource Block & RB offset	Target MPR	Meas MPR	Low Channel (dBm)	Middle Channel (dBm)	High Channel (dBm)
10M	QPSK	RB1#0	0	0	24.15	23.91	24.28
		RB1#25	0	0	24.02	23.50	24.28
		RB1#49	0	0	23.76	22.97	22.85
		RB25#0	1	1	23.41	22.96	23.68
		RB25#25	1	1	23.22	22.35	22.92
		RB50#0	1	1	23.32	22.58	23.35
	16-QAM	RB1#0	1	1	23.46	23.16	23.27
		RB1#25	1	1	23.57	22.65	23.32
		RB1#49	1	1	23.38	22.18	22.10
		RB25#0	2	2	22.40	22.11	22.64
		RB25#25	2	2	22.33	21.46	22.21
		RB50#0	2	2	22.30	21.72	22.38
15M	QPSK	RB1#0	0	0	24.18	24.26	23.93
		RB1#38	0	0	24.04	23.52	24.22
		RB1#74	0	0	24.10	23.38	23.15
		RB36#0	1	1	23.43	22.95	23.23
		RB36#39	1	1	23.22	22.46	23.11
		RB75#0	1	1	23.35	22.70	23.16
	16-QAM	RB1#0	1	1	23.71	23.37	23.22
		RB1#38	1	1	23.46	22.57	23.54
		RB1#74	1	1	23.65	22.64	22.65
		RB36#0	2	2	22.44	22.13	22.20
		RB36#39	2	2	22.34	21.54	22.15
		RB75#0	2	2	22.53	21.83	22.31
20M	QPSK	RB1#0	0	0	24.14	24.31	23.70
		RB1#50	0	0	24.01	24.52	24.21
		RB1#99	0	0	23.62	24.66	23.44
		RB50#0	1	1	23.33	23.38	22.90
		RB50#50	1	1	23.11	23.53	23.37
		RB100#0	1	1	23.21	23.52	23.20
	16-QAM	RB1#0	1	1	23.45	23.60	22.84
		RB1#50	1	1	23.46	23.27	23.45
		RB1#99	1	1	22.99	23.40	22.76
		RB50#0	2	2	22.32	22.48	22.01
		RB50#50	2	2	22.28	21.90	22.46
		RB100#0	2	2	22.27	22.12	22.14

LTE Band 7:

Test Bandwidth	Test Modulation	Resource Block & RB offset	Target MPR	Meas MPR	Low Channel (dBm)	Middle Channel (dBm)	High Channel (dBm)
5M	QPSK	RB1#0	0	0	19.55	19.01	18.96
		RB1#13	0	0	19.50	18.99	18.97
		RB1#24	0	0	19.25	18.97	18.81
		RB15#0	1	1	18.59	18.08	17.94
		RB15#10	1	1	18.45	17.98	17.99
		RB25#0	1	1	18.48	17.99	17.96
	16-QAM	RB1#0	1	1	18.66	18.32	18.13
		RB1#13	1	1	18.37	18.32	18.04
		RB1#24	1	1	18.27	18.38	17.97
		RB15#0	2	2	17.68	17.05	17.10
		RB15#10	2	2	17.53	17.00	17.04
		RB25#0	2	2	17.55	17.03	17.04
10M	QPSK	RB1#0	0	0	19.37	18.96	18.94
		RB1#25	0	0	19.16	19.05	18.89
		RB1#49	0	0	19.06	18.89	18.93
		RB25#0	1	1	18.53	17.96	18.06
		RB25#25	1	1	18.26	17.91	18.04
		RB50#0	1	1	18.40	17.99	18.03
	16-QAM	RB1#0	1	1	19.23	18.20	18.15
		RB1#25	1	1	18.89	18.17	18.11
		RB1#49	1	1	18.80	18.17	18.00
		RB25#0	2	2	17.55	17.11	17.14
		RB25#25	2	2	17.24	17.06	17.06
		RB50#0	2	2	17.39	16.94	16.99
15M	QPSK	RB1#0	0	0	19.48	18.89	18.88
		RB1#38	0	0	18.95	18.75	18.92
		RB1#74	0	0	18.83	18.82	18.97
		RB36#0	1	1	18.32	18.05	18.02
		RB36#39	1	1	18.06	17.89	17.92
		RB75#0	1	1	18.20	18.00	18.02
	16-QAM	RB1#0	1	1	19.19	18.60	18.11
		RB1#38	1	1	18.74	18.53	18.28
		RB1#74	1	1	18.79	18.65	18.18
		RB36#0	2	2	17.41	17.01	17.10
		RB36#39	2	2	17.06	16.92	17.02
		RB75#0	2	2	17.29	17.00	17.00

Test Bandwidth	Test Modulation	Resource Block & RB offset	Target MPR	Meas MPR	Low Channel (dBm)	Middle Channel (dBm)	High Channel (dBm)
20M	QPSK	RB1#0	0	0	19.33	18.98	18.98
		RB1#50	0	0	18.96	18.98	19.07
		RB1#99	0	0	18.90	18.85	18.96
		RB50#0	1	1	18.29	18.13	17.96
		RB50#50	1	1	18.14	18.02	18.04
		RB100#0	1	1	18.19	18.08	18.01
	16-QAM	RB1#0	1	1	19.15	18.56	18.20
		RB1#50	1	1	18.78	18.32	18.39
		RB1#99	1	1	18.80	18.33	18.26
		RB50#0	2	2	17.35	17.18	17.03
		RB50#50	2	2	17.12	17.05	17.11
		RB100#0	2	2	17.26	17.07	17.09

LTE Band 12:

Test Bandwidth	Test Modulation	Resource Block & RB offset	Target MPR	Meas MPR	Low Channel (dBm)	Middle Channel (dBm)	High Channel (dBm)
1.4M	QPSK	RB1#0	0	0	23.46	23.31	22.43
		RB1#3	0	0	23.22	23.08	22.45
		RB1#5	0	0	23.31	23.25	22.32
		RB3#0	1	1	23.02	23.22	22.52
		RB3#3	1	1	23.00	23.27	22.56
		RB6#0	1	1	22.47	22.47	21.68
	16-QAM	RB1#0	1	1	22.07	22.45	21.36
		RB1#3	1	1	22.15	22.43	21.51
		RB1#5	1	1	22.10	22.48	21.51
		RB3#0	2	2	22.01	22.14	21.58
		RB3#3	2	2	22.14	22.12	21.67
		RB6#0	2	2	21.18	21.20	20.72
3M	QPSK	RB1#0	0	0	22.89	22.92	23.02
		RB1#8	0	0	22.45	22.91	22.49
		RB1#14	0	0	22.43	23.56	22.46
		RB6#0	1	1	22.27	22.33	22.27
		RB6#9	1	1	22.02	22.42	21.95
		RB15#0	1	1	22.26	22.26	22.12
	16-QAM	RB1#0	1	1	22.16	22.48	22.14
		RB1#8	1	1	21.87	22.52	21.57
		RB1#14	1	1	21.75	22.37	21.73
		RB6#0	2	2	21.23	21.31	21.32
		RB6#9	2	2	21.29	21.28	20.82
		RB15#0	2	2	21.20	21.28	20.90
5M	QPSK	RB1#0	0	0	22.87	22.77	23.20
		RB1#13	0	0	22.54	22.60	22.23
		RB1#24	0	0	22.67	23.22	22.15
		RB15#0	1	1	22.37	22.30	22.06
		RB15#10	1	1	21.96	22.21	21.41
		RB25#0	1	1	21.96	22.29	21.65
	16-QAM	RB1#0	1	1	21.58	22.19	21.97
		RB1#13	1	1	21.12	22.23	21.04
		RB1#24	1	1	21.28	22.11	21.08
		RB15#0	2	2	20.94	21.35	21.09
		RB15#10	2	2	20.56	21.25	20.41
		RB25#0	2	2	20.79	21.18	20.83

Test Bandwidth	Test Modulation	Resource Block & RB offset	Target MPR	Meas MPR	Low Channel (dBm)	Middle Channel (dBm)	High Channel (dBm)
10M	QPSK	RB1#0	0	0	23.03	22.60	23.64
		RB1#25	0	0	22.73	22.60	22.69
		RB1#49	0	0	22.68	21.82	21.92
		RB25#0	1	1	22.23	22.13	22.89
		RB25#25	1	1	22.20	21.99	21.49
		RB50#0	1	1	22.12	22.08	22.28
	16-QAM	RB1#0	1	1	22.13	21.96	22.70
		RB1#25	1	1	21.73	21.98	21.77
		RB1#49	1	1	22.04	21.08	21.06
		RB25#0	2	2	21.18	21.28	21.78
		RB25#25	2	2	21.13	21.04	20.66
		RB50#0	2	2	21.07	21.18	21.42

LTE Band 17:

Test Bandwidth	Test Modulation	Resource Block & RB offset	Target MPR	Meas MPR	Low Channel (dBm)	Middle Channel (dBm)	High Channel (dBm)
5M	QPSK	RB1#0	0	0	23.32	24.07	23.73
		RB1#13	0	0	23.09	23.44	22.09
		RB1#24	0	0	23.67	22.92	21.79
		RB15#0	1	1	22.13	22.74	21.69
		RB15#10	1	1	22.46	22.35	20.91
		RB25#0	1	1	22.26	22.60	21.23
	16-QAM	RB1#0	1	1	22.36	23.37	22.68
		RB1#13	1	1	22.16	22.96	21.07
		RB1#24	1	1	22.90	22.31	21.00
		RB15#0	2	2	21.31	21.80	20.72
		RB15#10	2	2	21.67	21.48	20.01
		RB25#0	2	2	21.58	21.70	20.50
10M	QPSK	RB1#0	0	0	23.64	23.60	23.71
		RB1#25	0	0	23.73	23.59	23.29
		RB1#49	0	0	21.95	21.67	21.48
		RB25#0	1	1	22.56	22.81	22.77
		RB25#25	1	1	22.26	21.76	21.38
		RB50#0	1	1	22.42	22.30	23.16
	16-QAM	RB1#0	1	1	23.12	22.76	23.83
		RB1#25	1	1	23.42	22.75	23.39
		RB1#49	1	1	21.55	20.89	21.49
		RB25#0	2	2	21.78	21.88	22.33
		RB25#25	2	2	21.48	20.94	21.28
		RB50#0	2	2	21.61	21.49	21.12

Wi-Fi 2.4G:

Mode	Channel frequency (MHz)	Data Rate	Conducted Average Output
802.11b	2412	1Mbps	12.21
	2442		12.60
	2472		**12.88**
802.11g	2412	6Mbps	10.69
	2442		10.57
	2472		10.80
802.11n HT20	2412	MCS0	10.09
	2442		10.35
	2472		9.98
802.11n HT40	2422	MCS0	9.20
	2442		9.45
	2462		9.21

Bluetooth:

Mode	Channel frequency (MHz)	RF Output Power (dBm)
BDR(GFSK)	2402	3.67
	2441	**4.35**
	2480	3.57
EDR(π/4-DQPSK)	2402	3.19
	2441	3.76
	2480	3.12
EDR(8DPSK)	2402	3.86
	2441	4.09
	2480	3.46
BLE	2402	4.26
	2440	**4.97**
	2480	4.27

Standalone SAR test exclusion considerations

Antennas Location:

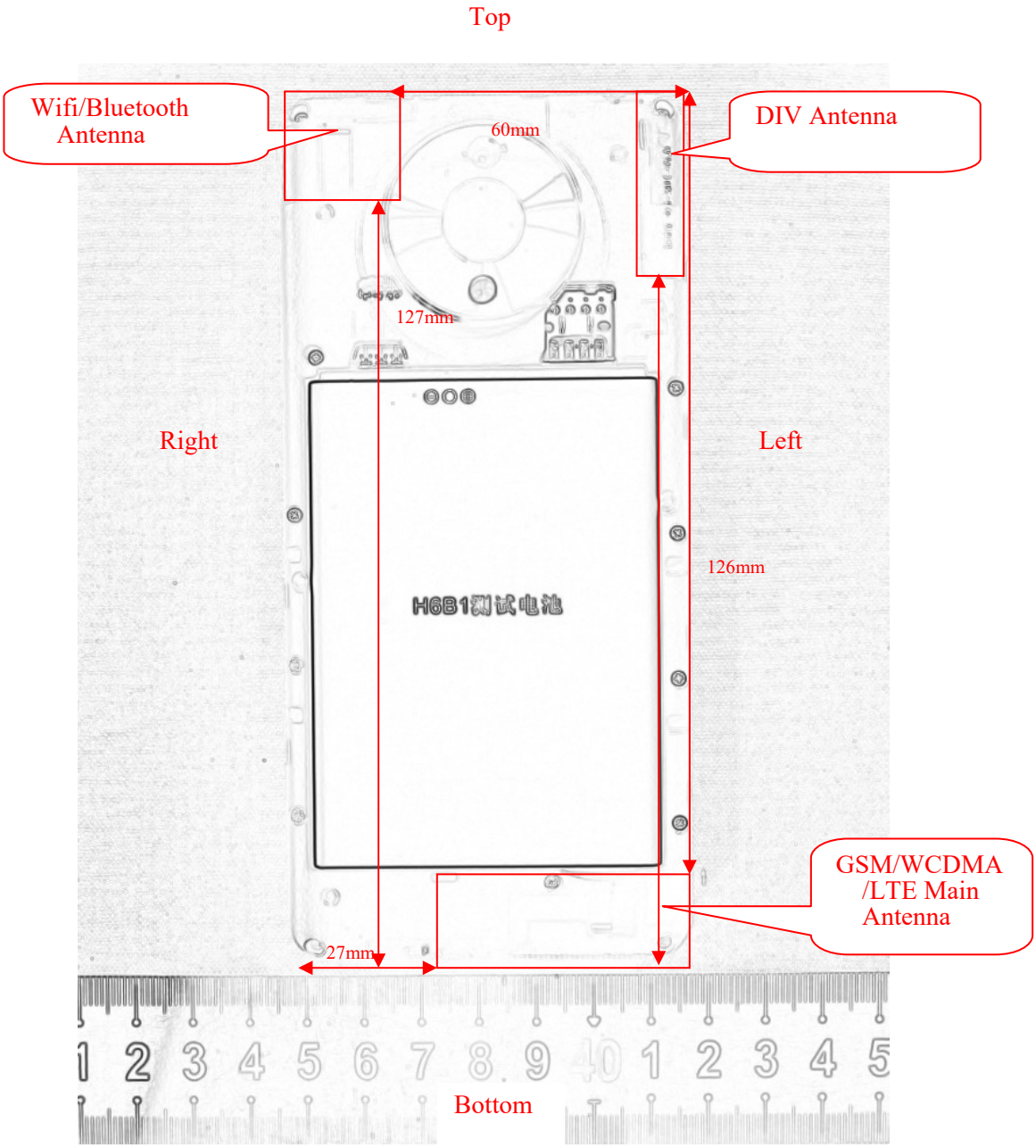

Back View

Note:The DIV antenna can only receive.

Antenna Distance To Edge

Antenna Distance To Edge(mm)						
Antenna	**Front**	**Back**	**Left**	**Right**	**Top**	**Bottom**
wifi/Bluetooth	< 5	< 5	60	< 5	< 5	127
Main Ant(GSM/WCDMA/LTE)	< 5	< 5	< 5	27	126	< 5

Standalone SAR test exclusion considerations

Mode	Frequency (MHz)	Output Power (dBm)	Output Power (mW)	Distance (mm)	Calculated value	Threshold (1-g)	SAR Test Exclusion
Bluetooth	2480	5.5	3.55	0	1.1	3.0	Yes
2.4G WLAN	2472	13	19.95	0	6.3	3.0	No

NOTE:

The 1-g and 10-g SAR test exclusion thresholds for 100 MHz to 6 GHz at test separation distances ≤ 50 mm are determined by:

[(max. power of channel, including tune-up tolerance, mW)/(min. test separation distance, mm)] ·

[√f(GHz)] ≤ 3.0 for 1-g SAR and ≤7.5 for 10-g extremity SAR, where

1. f(GHz) is the RF channel transmit frequency in GHz.
2. Power and distance are rounded to the nearest mW and mm before calculation.
3. The result is rounded to one decimal place for comparison.
4. When the minimum test separation distance is < 5 mm, a distance of 5 mm is applied to determine SAR test Exclusion.

Standalone SAR estimation:

Mode	Frequency (MHz)	Output Power (dBm)	Output Power (mW)	Distance (mm)	Estimated 1-g (W/kg)
BT Head	2480	5.5	3.55	0	0.15
BT Body	2480	5.5	3.55	10	0.07

When standalone SAR test exclusion applies to an antenna that transmits simultaneously with other antennas, the standalone SAR must be estimated according to following to determine simultaneous transmission SAR test exclusion:
[(max. power of channel, including tune-up tolerance , mW)/(min. test separation distance,mm)] ·
[√f(GHz)/x]
W/kg for test separation distances ≤50 mm;
where x = 7.5 for 1-g SAR.
When the minimum test separation distance is < 5 mm, a distance of 5 mm is applied to determine SAR test Exclusion

SAR test exclusion for the EUT edge considerations Result

Antenna Distance To Edge(mm)						
Mode	**Front**	**Back**	**Left**	**Right**	**Top**	**Bottom**
Bluetooth	Exclusion*	Exclusion*	Exclusion*	Exclusion*	Exclusion*	Exclusion*
2.4GWi-Fi	**Required**	**Required**	Exclusion	**Required**	**Required**	Exclusion
Main ANT(GSM/WCDMA/LTE)	**Required**	**Required**	**Required**	Exclusion	Exclusion	**Required**

Note:

Required：The distance to Edge is less than 25mm, testing is required.
Exclusion*：SAR test exclusion evaluation has been done above.
Exclusion：The distance to Edge is more than 25 mm, testing is not required.

SAR MEASUREMENT RESULTS

This page summarizes the results of the performed dosimetric evaluation.

SAR Test Data

Environmental Conditions

Temperature:	22.1-23.9 ℃	22.1-23.5 ℃	22.8-24.3 ℃
Relative Humidity:	44-63%	40-55 %	42-58 %
ATM Pressure:	101.2 kPa	101.8 kPa	101.4 kPa
Test Date:	2022/2/21	2022/2/22	2022/2/23

Testing was performed by Seven Liang, Jacky Yang, Fake ou.

GSM 850：

EUT Position	Frequency (MHz)	Test Mode	Max. Meas. Power (dBm)	Max. Rated Power (dBm)	1g SAR (W/kg)			
					Scaled Factor	Meas. SAR	Scaled SAR	Plot
Head Left Cheek	824.2	GSM	/	/	/	/	/	/
	836.6	GSM	32.55	34.0	1.396	0.064	0.09	1#
	848.8	GSM	/	/	/	/	/	/
Head Left Tilt	824.2	GSM	/	/	/	/	/	/
	836.6	GSM	32.55	34.0	1.396	0.027	0.04	2#
	848.8	GSM	/	/	/	/	/	/
Head Right Cheek	824.2	GSM	/	/	/	/	/	/
	836.6	GSM	32.55	34.0	1.396	0.055	0.08	3#
	848.8	GSM	/	/	/	/	/	/
Head Right Tilt	824.2	GSM	/	/	/	/	/	/
	836.6	GSM	32.55	34.0	1.396	0.029	0.04	4#
	848.8	GSM	/	/	/	/	/	/
Body Worn Back (10mm)	824.2	GSM	/	/	/	/	/	/
	836.6	GSM	32.55	34.0	1.396	0.083	0.12	5#
	848.8	GSM	/	/	/	/	/	/
Body Front (10mm)	824.2	GPRS	/	/	/	/	/	/
	836.6	GPRS	32.95	33.0	1.012	0.234	0.24	6#
	848.8	GPRS	/	/	/	/	/	/
Body Back (10mm)	824.2	GPRS	/	/	/	/	/	/
	836.6	GPRS	32.95	33.0	1.012	0.242	0.24	7#
	848.8	GPRS	/	/	/	/	/	/
Body Left (10mm)	824.2	GPRS	/	/	/	/	/	/
	836.6	GPRS	32.95	33.0	1.012	0.251	0.25	8#
	848.8	GPRS	/	/	/	/	/	/
Body Bottom (10mm)	824.2	GPRS	/	/	/	/	/	/
	836.6	GPRS	32.95	33.0	1.012	0.163	0.16	9#
	848.8	GPRS	/	/	/	/	/	/

Note:

1. When the 1-g SAR is ≤ 0.8W/Kg, testing for other channels are optional.
2. The EUT transmit and receive through the same GSM antenna while testing SAR.
3. When SAR or MPE is not measured at the maximum power level allowed for production units, the results must be scaled to the maximum tune-up tolerance limit according to the power applied to the individual channels tested to determine compliance.
4. When the maximum output power variation across the required test channels is > 0.5 dB, instead of the middle channel, the highest output power channel must be used.
5. The Multi-slot Classes of EUT is Class 12 which has maximum 4 Downlink slots and 4 Uplink slots, the maximum active slots is 5, when perform the multiple slots scan, 3DL+2UL is the worst case.

PCS 1900：

EUT Position	Frequency (MHz)	Test Mode	Max. Meas. Power (dBm)	Max. Rated Power (dBm)	1g SAR (W/kg)			
					Scaled Factor	Meas. SAR	Scaled SAR	Plot
Head Left Cheek	1850.2	GSM	/	/	/	/	/	/
	1880	GSM	29.16	29.5	1.081	0.031	0.03	10#
	1909.8	GSM	/	/	/	/	/	/
Head Left Tilt	1850.2	GSM	/	/	/	/	/	/
	1880	GSM	29.16	29.5	1.081	0.034	0.04	11#
	1909.8	GSM	/	/	/	/	/	/
Head Right Cheek	1850.2	GSM	/	/	/	/	/	/
	1880	GSM	29.16	29.5	1.081	0.062	0.07	12#
	1909.8	GSM	/	/	/	/	/	/
Head Right Tilt	1850.2	GSM	/	/	/	/	/	/
	1880	GSM	29.16	29.5	1.081	0.059	0.06	13#
	1909.8	GSM	/	/	/	/	/	/
Body Worn Back (10mm)	1850.2	GSM	/	/	/	/	/	/
	1880	GSM	29.16	29.5	1.081	0.282	0.30	14#
	1909.8	GSM	/	/	/	/	/	/
Body Front (10mm)	1850.2	GPRS	/	/	/	/	/	/
	1880	GPRS	28.30	29.0	1.175	0.051	0.06	15#
	1909.8	GPRS	/	/	/	/	/	/
Body Back (10mm)	1850.2	GPRS	/	/	/	/	/	/
	1880	GPRS	28.30	29.0	1.175	0.402	0.47	16#
	1909.8	GPRS	/	/	/	/	/	/
Body Left (10mm)	1850.2	GPRS	/	/	/	/	/	/
	1880	GPRS	28.30	29.0	1.175	0.245	0.29	17#
	1909.8	GPRS	/	/	/	/	/	/
Body Bottom (10mm)	1850.2	GPRS	/	/	/	/	/	/
	1880	GPRS	28.30	29.0	1.175	0.267	0.31	18#
	1909.8	GPRS	/	/	/	/	/	/

Note:

1. When the 1-g SAR is ≤ 0.8W/Kg, testing for other channels are optional.
2. The EUT transmit and receive through the same GSM antenna while testing SAR.
3. When SAR or MPE is not measured at the maximum power level allowed for production units, the results must be scaled to the maximum tune-up tolerance limit according to the power applied to the individual channels tested to determine compliance.
4. When the maximum output power variation across the required test channels is > 0.5 dB, instead of the middle channel, the highest output power channel must be used.
5. The Multi-slot Classes of EUT is Class 12 which has maximum 4 Downlink slots and 4 Uplink slots, the maximum active slots is 5, when perform the multiple slots scan, 3DL+2UL is the worst case.

WCDMA Band 2：

EUT Position	Frequency (MHz)	Test Mode	Max. Meas. Power (dBm)	Max. Rated Power (dBm)	1g SAR (W/kg)			
					Scaled Factor	Meas. SAR	Scaled SAR	Plot
Head Left Cheek	1852.4	RMC	/	/	/	/	/	/
	1880	RMC	20.40	21.0	1.148	0.238	0.27	19#
	1907.6	RMC	/	/	/	/	/	/
Head Left Tilt	1852.4	RMC	/	/	/	/	/	/
	1880	RMC	20.40	21.0	1.148	0.041	0.05	20#
	1907.6	RMC	/	/	/	/	/	/
Head Right Cheek	1852.4	RMC	/	/	/	/	/	/
	1880	RMC	20.40	21.0	1.148	0.097	0.11	21#
	1907.6	RMC	/	/	/	/	/	/
Head Right Tilt	1852.4	RMC	/	/	/	/	/	/
	1880	RMC	20.40	21.0	1.148	0.076	0.09	22#
	1907.6	RMC	/	/	/	/	/	/
Body Front (10mm)	1852.4	RMC	/	/	/	/	/	/
	1880	RMC	20.40	21.0	1.148	0.064	0.07	23#
	1907.6	RMC	/	/	/	/	/	/
Body Back (10mm)	1852.4	RMC	/	/	/	/	/	/
	1880	RMC	20.40	21.0	1.148	0.321	0.37	24#
	1907.6	RMC	/	/	/	/	/	/
Body Left (10mm)	1852.4	RMC	/	/	/	/	/	/
	1880	RMC	20.40	21.0	1.148	0.236	0.27	25#
	1907.6	RMC	/	/	/	/	/	/
Body Bottom (10mm)	1852.4	RMC	/	/	/	/	/	/
	1880	RMC	20.40	21.0	1.148	0.253	0.29	26#
	1907.6	RMC	/	/	/	/	/	/

WCDMA Band 5：

EUT Position	Frequency (MHz)	Test Mode	Max. Meas. Power (dBm)	Max. Rated Power (dBm)	1g SAR (W/kg)			
					Scaled Factor	Meas. SAR	Scaled SAR	Plot
Head Left Cheek	826.4	RMC	/	/	/	/	/	/
	836.6	RMC	22.80	23.0	1.047	0.043	0.05	27#
	846.6	RMC	/	/	/	/	/	/
Head Left Tilt	826.4	RMC	/	/	/	/	/	/
	836.6	RMC	22.80	23.0	1.047	0.024	0.03	28#
	846.6	RMC	/	/	/	/	/	/
Head Right Cheek	826.4	RMC	/	/	/	/	/	/
	836.6	RMC	22.80	23.0	1.047	0.040	0.04	29#
	846.6	RMC	/	/	/	/	/	/
Head Right Tilt	826.4	RMC	/	/	/	/	/	/
	836.6	RMC	22.80	23.0	1.047	0.020	0.02	30#
	846.6	RMC	/	/	/	/	/	/
Body Front (10mm)	826.4	RMC	/	/	/	/	/	/
	836.6	RMC	22.80	23.0	1.047	0.044	0.05	31#
	846.6	RMC	/	/	/	/	/	/
Body Back (10mm)	826.4	RMC	/	/	/	/	/	/
	836.6	RMC	22.80	23.0	1.047	0.067	0.07	32#
	846.6	RMC	/	/	/	/	/	/
Body Left (10mm)	826.4	RMC	/	/	/	/	/	/
	836.6	RMC	22.80	23.0	1.047	0.083	0.09	33#
	846.6	RMC	/	/	/	/	/	/
Body Bottom (10mm)	826.4	RMC	/	/	/	/	/	/
	836.6	RMC	22.80	23.0	1.047	0.047	0.05	34#
	846.6	RMC	/	/	/	/	/	/

Note:

1. When the 1-g SAR is≤ 0.8W/Kg, testing for other channels are optional.
2. The EUT transmit and receive through the same antenna while testing SAR.
3. The default test configuration is to measure SAR with an established radio link between the EUT and a communication test set using a 12.2 kbps RMC (reference measurement Channel) Configured in Test Loop Model.
4. KDB 941225 D01-Body SAR is not required for HSDPA/HSUPA/ HSPA+ when the maximum average output of each RF channel is less than ¼ dB higher than measured 12.2kbps RMC or the maximum SAR for 12.2kbps RMC is < 75% of SAR limit.
5. When SAR or MPE is not measured at the maximum power level allowed for production units, the results must be scaled to the maximum tune-up tolerance limit according to the power applied to the individual channels tested to determine compliance.

LTE Band 2：

EUT Position	Frequency (MHz)	Bandwidth (MHz)	Test Mode	Max. Meas. Power (dBm)	Max. Rated Power (dBm)	1g SAR (W/kg)			
						Scaled Factor	Meas. SAR	Scaled SAR	Plot
Head Left Cheek	1860	20	1RB	/	/	/	/	/	/
	1880	20	1RB	22.21	24.5	1.694	0.231	0.39	35#
	1900	20	1RB	/	/	/	/	/	/
	1880	20	50%RB	21.05	24.5	2.213	0.204	0.45	36#
Head Left Tilt	1860	20	1RB	/	/	/	/	/	/
	1880	20	1RB	22.21	24.5	1.694	0.065	0.11	37#
	1900	20	1RB	/	/	/	/	/	/
	1880	20	50%RB	21.05	24.5	2.213	0.065	0.14	38#
Head Right Cheek	1860	20	1RB	/	/	/	/	/	/
	1880	20	1RB	22.21	24.5	1.694	0.084	0.14	39#
	1900	20	1RB	/	/	/	/	/	/
	1880	20	50%RB	21.05	24.5	2.213	0.074	0.16	40#
Head Right Tilt	1860	20	1RB	/	/	/	/	/	/
	1880	20	1RB	22.21	24.5	1.694	0.060	0.10	41#
	1900	20	1RB	/	/	/	/	/	/
	1880	20	50%RB	21.05	24.5	2.213	0.049	0.11	42#
Body Front (10mm)	1860	20	1RB	/	/	/	/	/	/
	1880	20	1RB	22.21	24.5	1.694	0.324	0.55	43#
	1900	20	1RB	/	/	/	/	/	/
	1880	20	50%RB	21.05	24.5	2.213	0.294	0.65	44#
Body Back (10mm)	1860	20	1RB	/	/	/	/	/	/
	1880	20	1RB	22.21	24.5	1.694	0.215	0.36	45#
	1900	20	1RB	/	/	/	/	/	/
	1880	20	50%RB	21.05	24.5	2.213	0.186	0.41	46#
Body Left (10mm)	1860	20	1RB	/	/	/	/	/	/
	1880	20	1RB	22.21	24.5	1.694	0.176	0.30	47#
	1900	20	1RB	/	/	/	/	/	/
	1880	20	50%RB	21.05	24.5	2.213	0.192	0.42	48#
Body Bottom (10mm)	1860	20	1RB	/	/	/	/	/	/
	1880	20	1RB	22.21	24.5	1.694	0.109	0.18	49#
	1900	20	1RB	/	/	/	/	/	/
	1880	20	50%RB	21.05	24.5	2.213	0.097	0.21	50#

LTE Band 4：

EUT Position	Frequency (MHz)	Bandwidth (MHz)	Test Mode	Max. Meas. Power (dBm)	Max. Rated Power (dBm)	1g SAR (W/kg)			
						Scaled Factor	Meas. SAR	Scaled SAR	Plot
Head Left Cheek	1720	20	1RB	/	/	/	/	/	/
	1732.5	20	1RB	24.31	25.0	1.172	0.248	0.29	51#
	1745	20	1RB	/	/	/	/	/	/
	1732.5	20	50%RB	23.38	25.0	1.452	0.309	0.45	52#
Head Left Tilt	1720	20	1RB	/	/	/	/	/	/
	1732.5	20	1RB	24.31	25.0	1.172	0.104	0.12	53#
	1745	20	1RB	/	/	/	/	/	/
	1732.5	20	50%RB	23.38	25.0	1.452	0.082	0.12	54#
Head Right Cheek	1720	20	1RB	/	/	/	/	/	/
	1732.5	20	1RB	24.31	25.0	1.172	0.210	0.25	55#
	1745	20	1RB	/	/	/	/	/	/
	1732.5	20	50%RB	23.38	25.0	1.452	0.179	0.26	56#
Head Right Tilt	1720	20	1RB	/	/	/	/	/	/
	1732.5	20	1RB	24.31	25.0	1.172	0.057	0.07	57#
	1745	20	1RB	/	/	/	/	/	/
	1732.5	20	50%RB	23.38	25.0	1.452	0.067	0.10	58#
Body Front (10mm)	1720	20	1RB	/	/	/	/	/	/
	1732.5	20	1RB	24.31	25.0	1.172	0.154	0.18	59#
	1745	20	1RB	/	/	/	/	/	/
	1732.5	20	50%RB	23.38	25.0	1.452	0.119	0.17	60#
Body Back (10mm)	1720	20	1RB	/	/	/	/	/	/
	1732.5	20	1RB	24.31	25.0	1.172	0.547	0.64	61#
	1745	20	1RB	/	/	/	/	/	/
	1732.5	20	50%RB	23.38	25.0	1.452	0.473	0.69	62#
Body Left (10mm)	1720	20	1RB	/	/	/	/	/	/
	1732.5	20	1RB	24.31	25.0	1.172	0.327	0.38	63#
	1745	20	1RB	/	/	/	/	/	/
	1732.5	20	50%RB	23.38	25.0	1.452	0.296	0.43	64#
Body Bottom (10mm)	1720	20	1RB	/	/	/	/	/	/
	1732.5	20	1RB	24.31	25.0	1.172	0.350	0.41	65#
	1745	20	1RB	/	/	/	/	/	/
	1732.5	20	50%RB	23.38	25.0	1.452	0.294	0.43	66#

LTE Band 7 :

EUT Position	Frequency (MHz)	Bandwidth (MHz)	Test Mode	Max. Meas. Power (dBm)	Max. Rated Power (dBm)	1g SAR (W/kg)			
						Scaled Factor	Meas. SAR	Scaled SAR	Plot
Head Left Cheek	2510	20	1RB	/	/	/	/	/	/
	2535	20	1RB	18.98	20.0	1.265	0.306	0.39	67#
	2560	20	1RB	/	/	/	/	/	/
	2535	20	50%RB	18.13	20.0	1.538	0.223	0.34	68#
Head Left Tilt	2510	20	1RB	/	/	/	/	/	/
	2535	20	1RB	18.98	20.0	1.265	0.068	0.09	69#
	2560	20	1RB	/	/	/	/	/	/
	2535	20	50%RB	18.13	20.0	1.538	0.064	0.10	70#
Head Right Cheek	2510	20	1RB	/	/	/	/	/	/
	2535	20	1RB	18.98	20.0	1.265	0.124	0.16	71#
	2560	20	1RB	/	/	/	/	/	/
	2535	20	50%RB	18.13	20.0	1.538	0.110	0.17	72#
Head Right Tilt	2510	20	1RB	/	/	/	/	/	/
	2535	20	1RB	18.98	20.0	1.265	0.090	0.11	73#
	2560	20	1RB	/	/	/	/	/	/
	2535	20	50%RB	18.13	20.0	1.538	0.074	0.11	74#
Body Front (10mm)	2510	20	1RB	/	/	/	/	/	/
	2535	20	1RB	18.98	20.0	1.265	0.255	0.26	75#
	2560	20	1RB	/	/	/	/	/	/
	2535	20	50%RB	18.13	20.0	1.538	0.211	0.34	76#
Body Back (10mm)	2510	20	1RB	/	/	/	/	/	/
	2535	20	1RB	18.98	20.0	1.265	0.431	0.55	77#
	2560	20	1RB	/	/	/	/	/	/
	2535	20	50%RB	18.13	20.0	1.538	0.350	0.54	78#
Body Left (10mm)	2510	20	1RB	/	/	/	/	/	/
	2535	20	1RB	18.98	20.0	1.265	0.510	0.65	79#
	2560	20	1RB	/	/	/	/	/	/
	2535	20	50%RB	18.13	20.0	1.538	0.405	0.62	80#
Body Bottom (10mm)	2510	20	1RB	/	/	/	/	/	/
	2535	20	1RB	18.98	20.0	1.265	0.232	0.29	81#
	2560	20	1RB	/	/	/	/	/	/
	2535	20	50%RB	18.13	20.0	1.538	0.159	0.24	82#

LTE Band 12&17：

EUT Position	Frequency (MHz)	Bandwidth (MHz)	Test Mode	Max. Meas. Power (dBm)	Max. Rated Power (dBm)	1g SAR (W/kg)			
						Scaled Factor	Meas. SAR	Scaled SAR	Plot
Head Left Cheek	704	10	1RB	/	/	/	/	/	/
	707.5	10	1RB	22.60	24.5	1.549	0.102	0.16	83#
	711	10	1RB	/	/	/	/	/	/
	707.5	10	50%RB	22.13	24.5	1.726	0.077	0.13	84#
Head Left Tilt	704	10	1RB	/	/	/	/	/	/
	707.5	10	1RB	22.60	24.5	1.549	0.063	0.10	85#
	711	10	1RB	/	/	/	/	/	/
	707.5	10	50%RB	22.13	24.5	1.726	0.049	0.08	86#
Head Right Cheek	704	10	1RB	/	/	/	/	/	/
	707.5	10	1RB	22.60	24.5	1.549	0.080	0.12	87#
	711	10	1RB	/	/	/	/	/	/
	707.5	10	50%RB	22.13	24.5	1.726	0.062	0.11	88#
Head Right Tilt	704	10	1RB	/	/	/	/	/	/
	707.5	10	1RB	22.60	24.5	1.549	0.045	0.07	89#
	711	10	1RB	/	/	/	/	/	/
	707.5	10	50%RB	22.13	24.5	1.726	0.048	0.08	90#
Body Front (10mm)	704	20	1RB	/	/	/	/	/	/
	707.5	20	1RB	26.74	28.0	1.337	0.093	0.12	91#
	711	20	1RB	/	/	/	/	/	/
	707.5	20	50%RB	26.26	28.0	1.493	0.078	0.12	92#
Body Back (10mm)	704	10	1RB	/	/	/	/	/	/
	707.5	10	1RB	22.60	24.5	1.549	0.122	0.19	93#
	711	10	1RB	/	/	/	/	/	/
	707.5	10	50%RB	22.13	24.5	1.726	0.098	0.17	94#
Body Left (10mm)	704	10	1RB	/	/	/	/	/	/
	707.5	10	1RB	22.60	24.5	1.549	0.260	0.40	95#
	711	10	1RB	/	/	/	/	/	/
	707.5	10	50%RB	22.13	24.5	1.726	0.213	0.37	96#
Body Bottom (10mm)	704	10	1RB	/	/	/	/	/	/
	707.5	10	1RB	22.60	24.5	1.549	0.051	0.08	97#
	711	10	1RB	/	/	/	/	/	/
	707.5	10	50%RB	22.13	24.5	1.726	0.039	0.07	98#

Note:

1. When the 1-g SAR is ≤ 0.8W/Kg, testing for other channels are optional.
2. SAR for LTE band exposure configurations is measured according to the procedures of KDB 941225 D05 SAR for LTE Devices v02.
3. KDB941225D05-SAR for higher order modulation is required only when the highest maximum output power for the configuration in the higher order modulation is > 0.5 dB higher than the same configuration in QPSK or when the reported SAR for the QPSK configuration is > 1.45 W/kg
4. KDB941225D05-For QPSK with 100% RB allocation, when the reported SAR measured for the Highest output power channel is <1.45 W/kg, tests for the remaining required test channels are optional.

5.KDB941225D05- For QPSK with 100% RB allocation, SAR is not required when the highest maximum output power for 100 % RB allocation is less than the highest maximum output power in 50% and 1 RB allocations and the highest reported SAR for 1 RB and 50% RB allocation are ≤ 0.8 W/kg.
6. KDB941225D05- Start with the largest channel bandwidth and measure SAR for QPSK with 1 RB allocation, using the RB offset and required test channel combination with the highest maximum output power among RB offset the upper edge, middle and lower edge of each required test channel.
7. KDB941225D05- other channel bandwidths SAR test is required when the highest maximum output power of a configuration requiring testing in the smaller channel bandwidth is > 0.5 dB higher than the equivalent channel configurations in the largest channel bandwidth configuration or the reported SAR of a configuration for the largest channel bandwidth is > 1.45 W/kg.
8. Worst case SAR for 50% RB allocation is selected to be tested.
9. The E-UTRA Operating Band 17 is a subset of band 12, and they are same in modulation type, therefore, they were considered as one frequency band during SAR measurement, LTE Band 12 (the wide frequency range) was selected to test.

WLAN 2.4G:

EUT Position	Frequency (MHz)	Test Mode	Max. Meas. Power (dBm)	Max. Rated Power (dBm)	1g SAR (W/kg)			
					Scaled Factor	Meas. SAR	Scaled SAR	Plot
Head Left Cheek	2412	802.11b	/	/	/	/	/	/
	2442	802.11b	/	/	/	/	/	/
	2472	802.11b	12.88	13.0	1.028	0.286	0.29	99#
Head Left Tilt	2412	802.11b	/	/	/	/	/	/
	2442	802.11b	/	/	/	/	/	/
	2472	802.11b	12.88	13.0	1.028	0.167	0.17	100#
Head Right Cheek	2412	802.11b	/	/	/	/	/	/
	2442	802.11b	/	/	/	/	/	/
	2472	802.11b	12.88	13.0	1.028	0.187	0.19	101#
Head Right Tilt	2412	802.11b	/	/	/	/	/	/
	2442	802.11b	/	/	/	/	/	/
	2472	802.11b	12.88	13.0	1.028	0.142	0.15	102#
Body Front (10mm)	2412	802.11b	/	/	/	/	/	/
	2442	802.11b	/	/	/	/	/	/
	2472	802.11b	12.88	13.0	1.028	0.053	0.05	103#
Body Back (10mm)	2412	802.11b	/	/	/	/	/	/
	2442	802.11b	/	/	/	/	/	/
	2472	802.11b	12.88	13.0	1.028	0.288	0.30	104#
Body Right (10mm)	2412	802.11b	/	/	/	/	/	/
	2442	802.11b	/	/	/	/	/	/
	2472	802.11b	12.88	13.0	1.028	0.216	0.22	105#
Body Top (10mm)	2412	802.11b	/	/	/	/	/	/
	2442	802.11b	/	/	/	/	/	/
	2472	802.11b	12.88	13.0	1.028	0.100	0.10	106#

Note:
1. When the 1-g SAR is≤ 0.8W/Kg, testing for other channels are optional.
2. When the highest *reported* SAR for DSSS is adjusted by the ratio of OFDM to DSSS specified maximum output power and the adjusted SAR is ≤ 1.2 W/kg, OFDM SAR is not required.
3. When SAR or MPE is not measured at the maximum power level allowed for production units, the results must be scaled to the maximum tune-up tolerance limit according to the power applied to the individual channels tested to determine compliance.
4. When the same maximum power is specified for multiple transmission modes in a frequency band, the largest channel bandwidth,lowest order modulation,lowest data rate and lowest order 80211b/g/n mode is use for SAR measurement,on the highest measured output power channel in the initial test configuration,for each frequency band.

SAR Measurement Variability

In accordance with published RF Exposure KDB procedure 865664 D01 SAR measurement 100 MHz to 6 GHz v01. These additional measurements are repeated after the completion of all measurements requiring the same head or body tissue-equivalent medium in a frequency band. The test device should be returned to ambient conditions (normal room temperature) with the battery fully charged before it is re-mounted on the device holder for the repeated measurement(s) to minimize any unexpected variations in the repeated results

1) Repeated measurement is not required when the original highest measured SAR is < 0.80 W/kg; steps 2) through 4) do not apply.
2) When the original highest measured SAR is ≥ 0.80 W/kg, repeat that measurement once.
3) Perform a second repeated measurement only if the ratio of largest to smallest SAR for the original and first repeated measurements is > 1.20 or when the original or repeated measurement is ≥ 1.45 W/kg (~ 10% from the 1-g SAR limit).
4) Perform a third repeated measurement only if the original, first or second repeated measurement is ≥1.5 W/kg and the ratio of largest to smallest SAR for the original, first and second repeated measurements is > 1.20.

The Highest Measured SAR Configuration in Each Frequency Band

Head

SAR probe calibration point	Frequency Band	Freq.(MHz)	EUT Position	Meas. SAR (W/kg)		Largest to Smallest SAR Ratio
				Original	Repeated	
/	/	/	/	/	/	/

Body

SAR probe calibration point	Frequency Band	Freq.(MHz)	EUT Position	Meas. SAR (W/kg)		Largest to Smallest SAR Ratio
				Original	Repeated	
/	/	/	/	/	/	/

Note:

1. Second Repeated Measurement is not required since the ratio of the largest to smallest SAR for the original and first repeated measurement is not > 1.20.
2. The measured SAR results **do not** have to be scaled to the maximum tune-up tolerance to determine if repeated measurements are required.
3. SAR measurement variability must be assessed for each frequency band, which is determined by the **SAR probe calibration point and tissue-equivalent medium** used for the device measurements..

SAR SIMULTANEOUS TRANSMISSION DESCRIPTION

Simultaneous Transmission:

Description of Simultaneous Transmit Capabilities		
Transmitter Combination	**Simultaneous?**	**Hotspot?**
WWAN(GSM/WCDMA/LTE) + Bluetooth	√	×
WWAN(GSM/WCDMA/LTE) + WLAN	√	√
WLAN + Bluetooth	×	×

Simultaneous and Hotspot SAR test exclusion considerations:

Mode(SAR1+SAR2)	Position	Reported SAR(W/kg)		ΣSAR < 1.6W/kg
		SAR1	SAR2	
GSM 850+Bluetooth	Head Left Cheek	0.09	0.15	0.240
	Head Left Tilt	0.04	0.15	0.190
	Head Right Cheek	0.08	0.15	0.230
	Head Right Tilt	0.04	0.15	0.190
	Body Worn Back	0.12	0.07	0.190
	Body Front	0.24	0.07	0.310
	Body Back	0.24	0.07	0.310
PCS 1900+ Bluetooth	Head Left Cheek	0.03	0.15	0.180
	Head Left Tilt	0.04	0.15	0.190
	Head Right Cheek	0.07	0.15	0.220
	Head Right Tilt	0.06	0.15	0.210
	Body Worn Back	0.30	0.07	0.370
	Body Front	0.06	0.07	0.130
	Body Back	0.47	0.07	0.540
WCDMA Band 2+ Bluetooth	Head Left Cheek	0.27	0.15	0.420
	Head Left Tilt	0.05	0.15	0.200
	Head Right Cheek	0.11	0.15	0.260
	Head Right Tilt	0.09	0.15	0.240
	Body Front	0.65	0.07	0.720
	Body Back	0.37	0.07	0.440
WCDMA Band 5+ Bluetooth	Head Left Cheek	0.05	0.15	0.200
	Head Left Tilt	0.03	0.15	0.180
	Head Right Cheek	0.04	0.15	0.190
	Head Right Tilt	0.02	0.15	0.170
	Body Front	0.17	0.07	0.240
	Body Back	0.07	0.07	0.140
LTE Band 2+ Bluetooth	Head Left Cheek	0.45	0.15	0.600
	Head Left Tilt	0.14	0.15	0.290
	Head Right Cheek	0.16	0.15	0.310
	Head Right Tilt	0.11	0.15	0.260
	Body Front	0.79	0.07	0.860
	Body Back	0.41	0.07	0.480
LTE Band 4+ Bluetooth	Head Left Cheek	0.45	0.15	0.600

	Head Left Tilt	0.12	0.15	0.270
	Head Right Cheek	0.26	0.15	0.410
	Head Right Tilt	0.10	0.15	0.250
	Body Front	0.18	0.07	0.250
	Body Back	0.69	0.07	0.760
LTE Band 7 Bluetooth	Head Left Cheek	0.39	0.15	0.540
	Head Left Tilt	0.10	0.15	0.250
	Head Right Cheek	0.17	0.15	0.320
	Head Right Tilt	0.11	0.15	0.260
	Body Front	0.34	0.07	0.410
	Body Back	0.55	0.07	0.620
LTE Band 12&17etooth	Head Left Cheek	0.16	0.15	0.310
	Head Left Tilt	0.10	0.15	0.250
	Head Right Cheek	0.12	0.15	0.270
	Head Right Tilt	0.08	0.15	0.230
	Body Front	0.12	0.07	0.190
	Body Back	0.19	0.07	0.260

Mode(SAR1+SAR2)	Position	Reported SAR(W/kg)		ΣSAR < 1.6W/kg
		SAR1	SAR2	
GSM 850+ Wi-Fi 2.4G	Head Left Cheek	0.09	0.29	0.380
	Head Left Tilt	0.04	0.17	0.210
	Head Right Cheek	0.08	0.19	0.270
	Head Right Tilt	0.04	0.15	0.190
GSM 850+ Wi-Fi 2.4G (Hotspot)	Body Front	0.24	0.05	0.290
	Body Back	0.24	0.30	0.540
	Body Left	0.25	0.22	0.470
	Body Right	/	/	0.000
	Body Top	/	0.10	0.100
	Body Bottom	0.16	/	0.160
PCS 1900+ Wi-Fi 2.4G	Head Left Cheek	0.03	0.29	0.320
	Head Left Tilt	0.04	0.17	0.210
	Head Right Cheek	0.07	0.19	0.260
	Head Right Tilt	0.06	0.15	0.210
PCS 1900+ Wi-Fi 2.4G (Hotspot)	Body Front	0.06	0.05	0.110
	Body Back	0.47	0.30	0.770
	Body Left	0.29	0.22	0.510
	Body Right	/	/	0.000
	Body Top	/	0.10	0.100
	Body Bottom	0.31	/	0.310
WCDMA Band 2+ Wi-Fi 2.4G	Head Left Cheek	0.27	0.29	0.560
	Head Left Tilt	0.05	0.17	0.220
	Head Right Cheek	0.11	0.19	0.300
	Head Right Tilt	0.09	0.15	0.240
WCDMA Band 2+ Wi-Fi 2.4G (Hotspot)	Body Front	0.07	0.05	0.120
	Body Back	0.37	0.30	0.670
	Body Left	0.27	0.22	0.490
	Body Right	/	/	0.000
	Body Top	/	0.10	0.100
	Body Bottom	0.29	/	0.290
WCDMA Band 5+ Wi-Fi 2.4G	Head Left Cheek	0.05	0.29	0.340
	Head Left Tilt	0.03	0.17	0.200
	Head Right Cheek	0.04	0.19	0.230
	Head Right Tilt	0.02	0.15	0.170
WCDMA Band 5+ Wi-Fi 2.4G (Hotspot)	Body Front	0.05	0.05	0.100
	Body Back	0.07	0.30	0.370
	Body Left	0.09	0.22	0.310
	Body Right	/	/	0.000
	Body Top	/	0.10	0.100
	Body Bottom	0.05	/	0.050

Mode(SAR1+SAR2)	Position	Reported SAR(W/kg)		ΣSAR < 1.6W/kg
		SAR1	SAR2	
LTE Band 2+ Wi-Fi 2.4G	Head Left Cheek	0.45	0.29	**0.740**
	Head Left Tilt	0.14	0.17	0.310
	Head Right Cheek	0.16	0.19	0.350
	Head Right Tilt	0.11	0.15	0.260
LTE Band 2+ Wi-Fi 2.4G (Hotspot)	Body Front	0.65	0.05	0.700
	Body Back	0.41	0.30	0.710
	Body Left	0.42	0.22	0.640
	Body Right	/	/	0.000
	Body Top	/	0.10	0.100
	Body Bottom	0.21	/	0.210
LTE Band 4+ Wi-Fi 2.4G	Head Left Cheek	0.45	0.29	0.740
	Head Left Tilt	0.12	0.17	0.290
	Head Right Cheek	0.26	0.19	0.450
	Head Right Tilt	0.10	0.15	0.250
LTE Band 4+ Wi-Fi 2.4G (Hotspot)	Body Front	0.18	0.05	0.230
	Body Back	0.69	0.30	**0.990**
	Body Left	0.43	0.22	0.650
	Body Right	/	/	0.000
	Body Top	/	0.10	0.100
	Body Bottom	0.43	/	0.430
LTE Band 7+ Wi-Fi 2.4G	Head Left Cheek	0.39	0.29	0.680
	Head Left Tilt	0.10	0.17	0.270
	Head Right Cheek	0.17	0.19	0.360
	Head Right Tilt	0.11	0.15	0.260
LTE Band 7+ Wi-Fi 2.4G (Hotspot)	Body Front	0.34	0.05	0.390
	Body Back	0.55	0.30	0.850
	Body Left	0.65	0.22	0.870
	Body Right	/	/	0.000
	Body Top	/	0.10	0.100
	Body Bottom	0.29	/	0.290
LTE Band 12&17+ Wi-Fi 2.4G	Head Left Cheek	0.14	0.29	0.430
	Head Left Tilt	0.08	0.17	0.250
	Head Right Cheek	0.11	0.19	0.300
	Head Right Tilt	0.07	0.15	0.220
LTE Band 12&17+ Wi-Fi 2.4G (Hotspot)	Body Front	0.12	0.05	0.170
	Body Back	0.16	0.30	0.460
	Body Left	0.35	0.22	0.570
	Body Right	/	/	0.000
	Body Top	/	0.10	0.100
	Body Bottom	0.07	/	0.070

Note:

1. Hotspot mode SAR is measured for all edges and surfaces of the device with a transmitting antenna located within 25 mm from that surface or edge; for the data modes, wireless technologies and frequency bands supporting hotspot mode.
2. Hotspot Mode is not feasible during voice calls.

Conclusion:

Sum of SAR: **Σ SAR ≤ 1.6 W/kg** therefore simultaneous transmission SAR with Volume Scans is **not required**.

SAR Plots

Please Refer to the Attachment.

APPENDIX A MEASUREMENT UNCERTAINTY

KDB 865664 D01 SAR measurement 100MHz to 6GHz, when the highest measured 1-g SAR within a frequency band is < 1.5 W/kg and the measured 10-g SAR within a frequency band is < 3.75 W/kg. The expanded SAR measurement uncertainty must be ≤ 30%, for a confidence interval of k = 2. If these conditions are met, extensive SAR measurement uncertainty analysis described in IEEE Std 1528-2013 is not required in SAR reports submitted for equipment approval. For this device, the highest measured 1-g SAR is less 1.5W/kg and highest measured 10-g SAR is less 3.75W/kg. Therefore, the measurement uncertainty table is not required in this report

APPENDIX B EUT TEST POSITION PHOTOS

Please Refer to the Attachment.

APPENDIX C PROBE CALIBRATION CERTIFICATES

Please Refer to the Attachment.

APPENDIX D DIPOLE CALIBRATION CERTIFICATES

Please Refer to the Attachment.

******* END OF REPORT *******