V1产品说明书

感谢购买此款产品，使且前请仔细阅读本操作手册，以确保正确使用

本产品是一种带有MP3播放器的特殊蓝牙车载充电器，它采用专业的高性能蓝牙模块，内置MP3/WMA解码芯片，可将U盘、TF卡或者其它电子设备的音乐无线传输到汽车音响，并且，只要你的手机配有蓝牙功能，就可以将你的来电切换为免提状态，通话结束时，将自动换到音乐播放，它也可以将手机里的音乐发送到你的汽车音响设备，无需改装你的车，便可以享受音乐、以及免提模式，或者接听电话（让驾驶更安全，同时尽情享受音乐）。

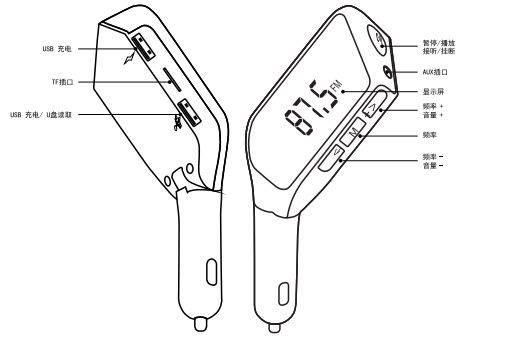

操作说明

1.蓝牙模式:

(1)将产品插入点烟器插座,匹配好频率,来电时按下蓝牙电话按键,发射器将自动接听/挂断电话.
(2).来电时数码管屏会显示电话号码/来电报号码功能.
(3).在连接状态下,点击手机电话号码拨号,你的电话声音将自动连接到车内音响.
(4).重拨号码-双击电话键二次,可以重拨电话号码.
(5).手机的蓝牙和车载发射器蓝牙连接模式时,车内可以播放手机内音乐.
(6)手机打开GPS播放时,可以通过车内音响播放GPS导航,使你行驶更安全

2.音乐播放模式:

(1).连接FM发射器,插入TF卡,车内音响自动播放TF卡内音乐.
(2) .插入U盘,车内音响自动播放U盘内音乐.
(3).可以通过发射器上的按键来调整声音大小(注:为了你的听觉效果达到最佳,在调整FM发射器音量时调到26效果最佳.)也可以通过车子的调音键来调整音量的大小.

3.频率调式范围:

车载发射器的频率范围(FM 87.5-108.0),产品点亮时,显示频上会出现一个频率,为了使音质达到最佳,把汽车内的FM调试到一个空的频率,再把发射器的频率调至匹配相同的频率,这样就连接成功了.

4.充电功能:

设备带USB(5V-3.0A)充电功能,USB接口充电时电流最大可达到5V-3.0A,可供手机和其它数码产品同时充电,可插U盘播放音乐和给设备充电,

5.断电记忆:

每次当产品断电后,系统自动记忆FM频率和手机TF卡/U盘或其它电子设备内的歌曲.当地你从再一次启动设备时,这首歌将继续播放.但是当你删除或者更改存储,或者系统检测到错误状态时,系统会播放第一首歌曲.

6.显示功能:

1.通电自动测量显示汽车电瓶电压（11.5V为电压过低、12.5V电压正常、14.5电压过高）
2.USB连接手机或其他电子设备时自动检测设备电流并显示电流数值。（注：数据线充电时检测结果会有误差，务必使用两芯充电线。）
3.本产品连接蓝牙时播放蓝牙歌曲，蓝牙标志会闪烁

技术参数:

工作电压:12V--24V
工作电压限制:9--26V
USB输出:5V--2.1A
播放格式:MP3 WMA
SNR: >60 DB
失真度:<0.1%
蓝牙版本:4.2+EDR
蓝牙声音处理:A2DP(高及音频分配模式)功能支持
蓝牙传输距离:10M
蓝牙话筒有效距离:0.5--2M
FM频率:87.5--108.0MHZ
FM模式:立体声数字PLL频率锁定

注意事项:

1.插入U盘时,连接功能处于打开状态,蓝牙功能会自动开启,一旦启动,该设备会自动通过蓝牙与手机相连,如果不想自动连接请断开你的手机蓝牙功能.
2.当正在使用调频时,切勿把发射器音量调到最大,以避免失真,请通过汽车音响调节音量.
3.本产品配有内置天线,所以请避免使用信号强烈的广播站频率或者将FM调至空频率,以便获得更好的声音效果.
4.使用手机不同,操作蓝牙的方式也可能不同.有些手机在断电后通电时,可能不支持自动连接,如果情况如此,请手动连接.
5.通话过程中的音量应适中,以免影响对方.
6.在启用蓝牙通话时,请注意如果车内太吵或车内隔音效果不是太好,也有可能影响到通话音质,请放慢你开车的速度或者停至路边,直到音效达到最佳.
7.不要在高温,粉尘或潮湿环境中使用本产品.
8.本产品长期不用时,应从汽车点烟口拔下,正常使用时,等汽车起动后再插上使用,避免点火电压过高损坏.

感谢你购买本产品，本产品会给各位体验者提供方便的使用，和愉快安全的驾车旅途。让车内的音乐伴你同行。

USER MANUAL

Thank you very much for buying this product. You are advised to read this user manual carefully before using this product. We sincerely hope this product will bring you a lot of convenience and fun while you take a ride.

This product is a multifunctional Car FM Transmitter which plays music in MP3/WMA format and charge a variety of electronic devices. With embedded high-performance Bluetooth module and MP3/WMA decoding chip, Audio playback can be implemented wirelessly with USB drive, TF and other electronic devices through a car audio.

Moreover, if a cell phone is connected with this product via Bluetooth, hands-free phone call operations during audio playback can be activated, as well as audio playback with cell phone through car audio.

Without any modification on your car, you can now enjoy the music, charge a variety of electronic devices and deal with you phone calls with your hands free.

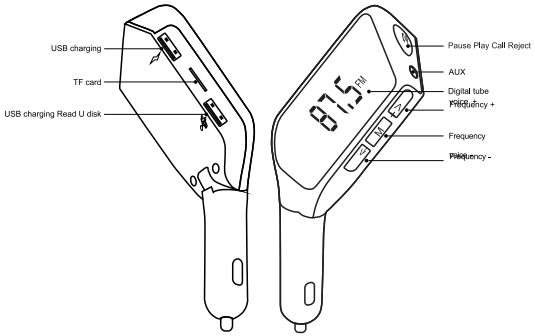

Operating Instructions

1. Bluetooth mode

(1) Put this product into the cigarette lighter and synchronize its frequency with that of the car FM radio. Connect this product with a cell phone through Bluetooth.
(2) Hands-free phone call operations activated: During audio playback, press a button once to answer an incoming call, press that button once again to hang up the call, press that button twice to call a phone number that you dialed last time. When there is an incoming call, the LCD display will show the telephone number and there is a voice prompt naming the caller's telephone number.
(3) Through car audio you can hear audio playback from cell phone, TF, USB drive and electronic devices via Aux in. You can also hear telephone conversations from car audio, as well as the audio messages in cell phone's GPS car navigation applications.

2. Audio playback mode

(1) When a TF is inserted, audio playback from TF is activated.
(2) When an USB drive inserted, audio playback from USB drive is activated.
(3) When a cell phone or other electronic devices are linked to this product, audio playback from these devices starts.
(4) The volume can be adjusted through both bathe buttons on this product and the buttons on car audio.

3. The range of FM frequency

87.5 - 108.0 MHz When the product is on, there is a frequency on the LCD display. To optimize sound quality, set car FM radio to an unoccupied frequency and synchronize this product's frequency to that. Thus car FM radio is successfully paired with this product.

4.Dual USB charging

This product supports cell phone and other electronic equipment charging function. You can play electronic music with a USB drive, or you can charge 2 devices.

5. Power-off memory

When this product is powered off, it remembers the frequency that is used and the music in cell phone, TF, USB drive and other electronic devices that is played before the it is turned down. When this product is initiated again, the frequency will be used and the music will be played. However, the first music will be played when you delete or change the memory (cell phone, memory in cell phone, TF, USB drive and other electronic devices) or when this product detect an error status.

Technical Parameters

Working voltage: 12V-24V
The limits of working voltage: 9V-26V
USB output: 5V-2.1A
Music format: MP3 and WMA
SNR > 60 DB
Distortion < 0.1%
Bluetooth version: 4.2+EDR
Bluetooth voice processing: Supports A2DP (advanced sound frequency distribution pattern)
Bluetooth effective range: 10M
Cell phone microphone Bluetooth effective rang: 0.5M - 2M
FM frequencies: 87.5MHz -108.0MHZ
FM mode: Stereo sound digital PLL frequency locking (or seeking)

Attentions

1. This product will connect with cell phone through Bluetooth automatically unless you turn off Bluetooth on cell phone.
2. To adjust the volume of car audio use the button on it instead of adjusting the volume through this product. If you use this product to increase the volume of car audio, do not increase the volume to the highest volume because that can cause distortion.
3. This product contains built-in antenna, so avoid switching to a FM frequency with very strong signal or an unoccupied FM frequency in order to get a better sound quality.
4. Some cell phones may not be automatically connected with this product through Bluetooth. If that happens, please manually connect cell phone with this product through Bluetooth.
5. When talking on cell phone. Do not raise your voice to an extent that may annoy the other party.
6. When talking on cell phone. the noise inside of the car may interfere with the sound quality. Slow down the car or pull over to resume the sound quality.
7 Do not use this product in a hot, dusty and wet environment.
8. Pull out this product from the cigarette lighter if it is not in use for a long time. Put this product into cigarette light after the car engine is started to avoid any possible damage of high voltage on this product.

Appreciate again for your purchase on this product. We do hope the extraordinary features of this product can bring you a convenient and pleasant (or wonderful) ride.

Warning:
changes or modifications not expressly approved by the party responsible for compliance could void the user’s authority to operate the equipment.
This device complies with Part 15 of the FCC Rules. Operation is subject to the following two conditions: (1) this device may not cause harmful interference, and (2) this device must accept any interference received, including interference that may cause undesired operation. changes or modifications not expressly approved by the party responsible for compliance could void the user's authority to operate the equipment.
NOTE: This equipment has been tested and found to comply with the limits for a Class B digital device, pursuant to Part 15 of the FCC Rules. These limits are designed to provide reasonable protection against harmful interference in a residential installation. This equipment generates, uses and can radiate radio frequency energy and, if not installed and used in accordance with the instructions, may cause harmful interference to radio communications. However, there is no guarantee that interference will not occur in a particular installation.
If this equipment does cause harmful interference to radio or television reception, which can be determined by turning the equipment off and on, the user is encouraged to try to correct the interference by one or more of the following measures:
-- Reorient or relocate the receiving antenna.
-- Increase the separation between the equipment and receiver.
--Connect the equipment into an outlet on a circuit different
from that to which the receiver is connected.
--Consult the dealer or an experienced radio/TV technician for help.
NOTE: This device and its antenna(s) must not be coÿlocated or operation in conjunction with any other antenna or transmitter.