GENUINE
ACCESSORIES

MG DVR

User Manual

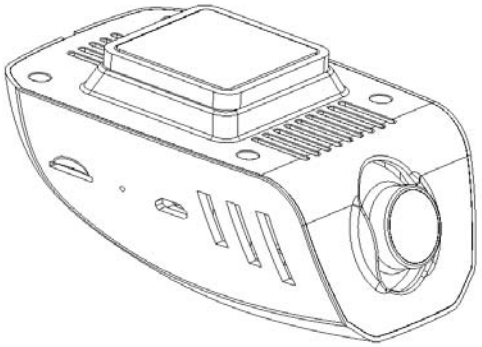

Content

1. Feature: 2

2. Precaution: 2

3. Warranty, Special Clause and

Exemptions 3

4. Specification: 4

5. Appearance and Parts: 5

6. Operation Instruction: 5

7. Phone Application: 6

8. Troubleshooting Guide: 9

1 Features

1. High quality video recorder for Full HD front and HD rear camera.
2. Front Camera use 140-degree wide angle lens to capture every moment.
3. Rear camera use 120-degree wide angle lens to focus the key image.
4. WDR function improve the good video quality.
5. Voice notice function.
6. Built-in G-sensor, the device will automatically record the emergency record upon an event.
7. Parking mode monitoring.
8. Smart phone APP can link with the device via WiFi for real-time monitoring, playback/download and DVR settings.

2 Precaution

1. Do not operate the car DVR while you are driving.
2. The product is for safety driving only, it records the video when you are driving.
3. The best video capture quality for this product is around 2.5~10 meters.
4. The video quality may be reducing in extremely dark environment.
5. Please configure the date and time with APP in first time start the device and re-configure every month or replace the battery.
6. Tinted glass are not allowed on the camera area, to avoid affecting video quality.
7. Avoid touching camera lens, except for cleaning purpose.
8. Do not disassemble the product to avoid damage.
9. To avoid malfunction, this product can only be installed/repaired by SAIC and MG Service Centre.
10. To avoid damaging the recorded video, please do not remove the Micro SD card during recording.
11. It is recommended to format the Micro SD card once a month, to prolong the Micro SD card' s life span.
12. The video record file will have two type of files, one is normal video record file and other is emergency record file.
13. When manually stop the recording, the device will not automatically continue recording until restart the engine. User must manually restart the recording.
14. In order to ensure that when the DVR is in parking monitoring mode for a long time, the DVR will automatically monitor the battery level of the car. When the battery level reaches 12.3V, the parking monitoring function will be automatically turned off to ensure that the car can be restarted. Please restart the DVR. Connect the mobile phone APP to synchronize the time to ensure that the DVR recording time is consistent with the mobile phone.

3 Warranty, Special Clause and Exemptions

1. Please use a genuine micro SD Card to ensure the recording quality and reliability. Files maybe lost or damaged when using non- genuine (imitation cards). MG is not responsible for and case caused by usage of non-genuine micro SD Card. Please ensure to use minimum speed of "CLASS 10" micro SD Card. Never eject the memory card while recording, it maybe damage to the card.

2. This product is used for video and audio recording. The recorded media shall be used ONLY as an additional reference in any case of accidents etc. MG shall not be held liable or responsible in any matter related to the use of the recorder in any situation or scenarios, whether directly or indirectly.

3. Please use the recorder while abiding the laws of your country, regarding rights in regards to using recording devices.

4. The recorder hardware has two (2) years / 50,000km warranty from manufacturer against Manufacturing Defects ONLY. Warranty will be void if the manufacturer deems that the defect is caused by users or any other reasons (such as water entry).

Notice:
No.1: This Car DVR is just for use of driving assistance and it can NOT substitute the actual manual operation, since there may be tolerance error in the ADAS/ GPS/ E-dog (Some versions) from this Car DVR. MG takes no responsibility for any of the accident or dispute caused.

No.2: The video or photo data taken by this Car DVR is for the use of recording only. MG takes no responsibility for any dispute caused by the illegal transmission of the data which may contain privacy information.

No.3: The video or photo data taken by this Car DVR is just for reference when there is an accident or dash and its responsibility is subject to the related traffic department' s judgment. MG takes no responsibility for cases above.

4 Technique Specification

MG DVR

NAME	Parameter
Chipset Frequency	600MHz
DDR Memory	2GB
Video Resolution	1080p@30fps,720p@30~60fps
Lens Angle	155
Lens Aperture	F2.0
Video Compress Mode	H.264
Memory Capacity	8/16/64/128G (Standard Version is 16GB)
Working Temperature	-30℃~80℃
Storage Temperature	-35℃~85℃
WIFI Protocol	2.4GHz IEEE802.11b/g/n
Input Voltage	12V ⎓
Working Current	less than 300mA
Working Voltage	10.5V~24V ⎓
Rating Power	less than 3.6W
Standby Current	less than 1mA
SD Card checking	SD Card remaining storage/lifespan can be viewed on APP
Supported Language	Thai,Chinese,English

Packing List for products & QC Passed

Packing List for products:

Number	Name	Quantity
1	Main Unit	1
2	Manual	1
3	Prolonged power cable	1
4	Memory Card	1
5	Internal Rear Camera	1
6	Installation Guideline	1

5 Appearance and Parts

1. Lens
2. USB Interface
3. Reset
4. SD Card Socket
5. On/off and Indicating Light
6. Speaker

6 Operation Instruction

Button & Indication Light Definition		
Name	Operation	Definition
Button	After it's on,short press for<1 Second	Snap Photo
	After it's on,short press for>1 Second	Record video
	After it's on,long press for 8 seconds(W/ SD Card)	Restart the Car DVR
Red & Blue Indication Light	Blue light always on	WiFi unconnected and mute
	Blue light flashes	WiFi unconnected with sound
	Red light flashes	Hardware upgrade or Car DVR abnormal
	Red light always on	SD Card un-inserted
	Red ,blue light flash alternatively	Connected with WiFi

7 Phone Application

Use your cellphone to scan the QR Code , download and install it: “MG DVR”App.

Or search “MG DVR”on App Store(For IOS) or on Google Play (For Android)

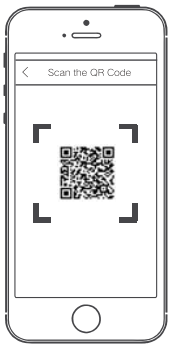

Note: APP only for cellphone of iOS 8.0 or Android 5.0 above

SCAN ME

For IOS

SCAN ME

For Android

The Car DVR original factory setting is as below:

WIFI ID: MG_DVR_XXXXXX

WIFI Password: 12345678

MG DVR App Images& the steps

1.Power on the Car DVR and go to MG App.

2.input password : 12345678

3.Enter into the actual interface.

Illustration of the App interface.

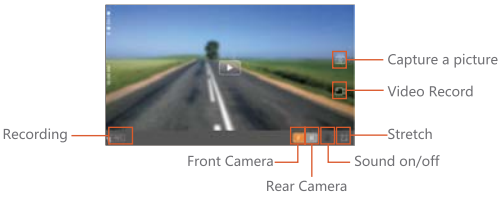

4. Please adjust the lens angle of the front and rear camera to suitable position.

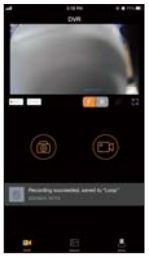

5.Video recording.

6.Recorded files.

7. Album interface.

8.Edit option etc.

9. Mine content.

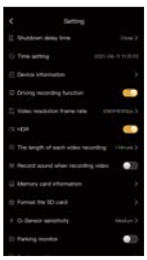

10.DVR Setting.

8 Troubleshooting Guide

Q: How far is the required distance for Wi-Fi?
A: Theoretically it requires to be 10 meters in maximum for effective transmission, but considering there will be different Wi-Fi environment, it´s advised to keep the cellphone and the Car DVR close enough to have better connection.
Q: Will the Car DVR drain the car power?
A: The working current for the Car DVR is less than 300mA and its stand-by current is less than 1mA, so it won´t drain the car power.
Q: What if Wi-Fi connection fails or it shows password incorrect ?
A: Make sure if the car and Car DVR are on and check if the distance is within 5 meters. And check the following points:
1. Indication light is in normal status.(Red Light always on,Blue Light keeps twinkling) ;
2. Check if the Car DVR is being connected with else cellphone.(It can only connects one cellphone in a time);
3. Check if the password is input correctly.
Q: Preview is quite slow and can´t preview video normally?
A: Please avoid environment with complicated electronic products since the actual video is transmitted by wireless signal to the App on cellphone which may be affected in certain environment. It´s advised to turn off the car bluetooth when previewing the actual video since the frequencies are quite similar.
Q: The Car DVR always reminds to synchronize the time with cellphone ?
A: It´s probably because of the below cases:
1. B+ connection incorrect
2. B+ and ACC were mixed up, advise to check the circuit connection.
Q: Dark display when previewing the actual video ?
A: Cache issue. Please clear up the cache and open the App again.
Q: It shows “Illegal device” when enter into the App?
A: The Car DVR and App version is not in correspondence. Please check and get the proper App version.
Q: Red Light and Blue Light are always on, and it can´t record video?
A: Memory card issue which causes its malfunction. Solution is to format the memory card via a computer and press the reset position, and then insert the memory card.

Disclaimer:

1. MG DVR WIFI Hidden Dedicated Car DVR, short for Car DVR, and it is designed for recording video, taking photo etc data when driving. MG takes no related responsibility of any loss caused by lost or bad data because of incorrect operations. We advise to use memory card of class 10 or above. To avoid misunderstanding, we herein clarify that the Car DVR can only allowed to do the recording when it works normally. But the video or photo may be damaged or lost for below cases:

1.1 Taking out the memory card illegally or operating abnormally when the Car DVR is recording, your data may be damaged or lost.

1.2 The Car DVR is under destructive hit severely when recording, the data may be damaged or lost.

2. Please do remember to read this user manual carefully before you use this Car DVR and follow the below instructions:

2.1 Please use this Car DVR legally obeying the laws and regulation.

2.2 Make sure the Car DVR is installed by professionals correctly and properly and make sure it works normally.

2.3 Please keep this user manual well since it has original connection information for this Car DVR.

2.4 Please read ***B Notice to Customers*** carefully and follow its instructions.

2.5 If the car engine is not on, and the Car DVR is connected to the car power system, it is advised to turn off the Car DVR in case the power is drained off.

2.6 Normal working temperature for the Car DVR is -30~80℃ ,please don´t use the Car DVR at high/low temperature or under high moisture to avoid working failure.

2.7 The Car DVR will be upgraded in unplanned time and some of the functions may be slightly different from depict on this manual, so they are subject to the actual Car DVR at hand.

Notice:

No.1: This Car DVR is just for use of driving assistance and it can NOT substitute the actual manual operation, since there may be tolerance error in the ADAS/GPS/E-dog (Some versions)from this Car DVR. MG takes no responsibility for any of the accident or dispute caused.

No.2: The video or photo data taken by this Car DVR is for the use of recording only. MG takes no responsibility for any dispute caused by the illegal transmission of the data which may contain privacy information.

No.3: The video or photo data taken by this Car DVR is just for reference when there is an accident or dash and its responsibility is subject to the related traffic department´s judgment. MG takes no responsibility for cases above.

Notice to Customers

1. About the Car DVR indication light status and instruction:
1.1 Turn on the Car DVR ,
if red light always on and blue light twinkles: the Car DVR is working normally.
Red and blue light twinkle at the same time quickly: Car DVR is under urgent recording.
Red light twinkles and blue light is on: there is no memory card in car DVR or the device can´t detect the memory card.
1.2 If the red light twinkles fast and blue light twinkles abnormally ,or the blue light is always on, this means the Car DVR is in malfunction or crash, please examine it and cut off the power to process and then reset it .
1.3 If the Car DVR is in crash, it requires to reset the unit (turn off and then turn on),or press the "Reset" position to restart. Remember to check the light status,and the Car DVR is working normally when the Red Light is always on and Blue Light twinkles . And it means the Car DVR is in urgent video recording if both Red Light and Blue Light twinkle fast.
1.4 The user is required to observe if the indication lights are off after the car is power off to make sure the Car DVR is already power off.

2. About the Memory Card:
2.1 The user is advised to format the memory card via cellphone or computer periodically to make it in good working condition since the memory card is repeatedly working and recording video which may bring memory chips while these chips may affect its normal use.
2.2 It´s advised to choose the high-speed memory card of class 10 or above when it necessary to change it.

3. The Car DVR voice prompt
3.1 First time of start------ the car is on with ACC, the Car DVR will give voice prompt "please synchronize the time with cellphone" .
3.2 If the Car DVR is not connected to a cellphone and when it' s on next time it will give voice prompt "please synchronize the time with cellphone" .
3.3 If the Car DVR is connected with the cellphone and Memory Card is formatted, then there will be no voice prompt in next start of the unit.
3.4 The Car DVR will give voice prompt "Please insert the SD Card" if it detects there is no Memory Card or it' s abnormal. And it will give voice prompt" Please change your SD Card" if the Memory Card lifespan is less than 5%.
3.5 If the SSID and password are forgotten, one can take out the Memory Card when it is in normally working and press the button in short time so that it will resume to the original SSID and Password.

4. Please make sure the user know the above notes and instructions so that the Car DVR is operated correctly and properly.

FCC Statement

This device complies with part 15 of the FCC rules. Operation is subject to the following two conditions: (1) this device may not cause harmful interference, and (2) this device must accept any interference received, including interference that may cause undesired operation.

Changes or modifications not expressly approved by the party responsible for compliance could void the user's authority to operate the equipment.

NOTE: This equipment has been tested and found to comply with the limits for a Class B digital device, pursuant to part 15 of the FCC Rules. These limits are designed to provide reasonable protection against harmful interference in a residential installation. This equipment generates uses and can radiate radio frequency energy and, if not installed and used in accordance with the instructions, may cause harmful interference to radio communications. However, there is no guarantee that interference will not occur in a particular installation. If this equipment does cause harmful interference to radio or television reception, which can be determined by turning the equipment off and on, the user is encouraged to try to correct the interference by one or more of the following measures:

•Reorient or relocate the receiving antenna.

•Increase the separation between the equipment and receiver.

•Connect the equipment into an outlet on a circuit different from that to which the receiver is connected.

•Consult the dealer or an experienced radio/TV technician for help.

Radiation Exposure Statement

To comply with FCC RF exposure compliance requirements, this grant is applicable to only mobile configurations. The antennas used for this transmitter must be installed to provide a separation di stance of at least 20cm from all persons and must not be co-located or operating in conjunction with any other antenna or transmitter.