NOTE: This equipment has been tested and found to comply with the limits for a Class B digital device, pursuant to part 15 of the FCC Rules. These limits are designed to provide reasonable protection against harmful interference in a residential installation. This equipment generates uses and can radiate radio frequency energy and, if not installed and used in accordance with the instructions, may cause harmful interference to radio communications. However, there is no guarantee that interference will not occur in a particular installation. If this equipment does cause harmful interference to radio or television reception, which can be determined by turning the equipment off and on, the user is encouraged to try to correct the interference by one or more of the following measures:

- Reorient or relocate the receiving antenna.
- Increase the separation between the equipment and receiver.
-Connect the equipment into an outlet on a circuit different from that to which the receiver is connected.
-Consult the dealer or an experienced radio/TV technician for help

Changes or modifications not expressly approved by the party responsible for compliance could void the user's authority to operate the equipment. This device complies with Part 15 of the FCC Rules. Operation is subject to the following two conditions:
(1) this device may not cause harmful interference, and
(2) this device must accept any interference received, including interference that may cause undesired operation.

PRODUCT DESCRIPTION

The bluetooth active noise cancelling earphone, Disturbing ambient noise in the low frequency range is sensed by the tiny microphones and deleted by counter-sound (phase inverse tones). It has good noise cancelling performance through active&passive noise cancellation. Especially apply for noisy environment such as airplane, High-speed train. The product use high sensitive driving speaker, offer HiFi sound even at the very noisy situation, EB03 is applied for smart phones, pads, players. The product construction meets the ergonomic design, light , beautiful and suitable, the ear tips have large, medium, small three size, it is safe and environmental , no irritant.

Notes: Please read this User Manual carefully before using the EB03 ANC earphones.

PACKING LIST

1X ANC Wireless Earphone EB03
1X USB Charging Cable
1X User Manual
1X Buggy Bag
1X Large & Small Earplugs

APPEARANCE

1. MICROPHONE
2. ANC ON/OFF Switch
3. ANC/BT LED
4. Previous/Volume down
5. ON/OFF/Play/Pause Button
6. NEXT/Volume up
7. MICRO USB Charging Port
8. Charging Indicator

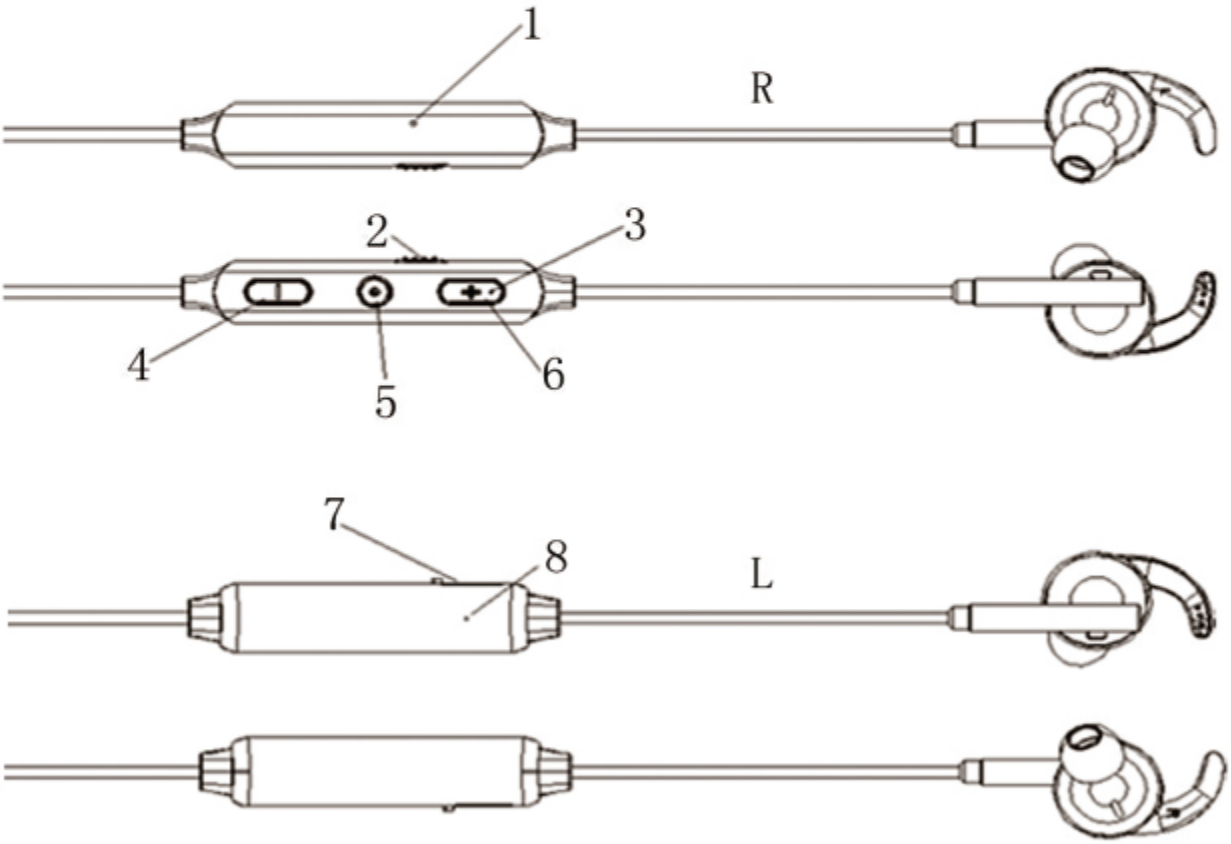

METHOD OF USE

FUNCTION	OPERATION AND INDICATION
Power on	Press and hold "ON/OFF" button for 1 second and the Blue light will flash shortly.
Power off	Press and hold "ON/OFF" button for 2.5 second and the blue light off.
Pairing	1. Reconnect the recorded devices automatically when BT power ON. 2. Blue light flash quickly during pairing, if no. devices connected, the earphone is power off after 5 min time out. 3. Enter by press&hold "ON/OFF" button for 1 second.
Volume up	Short press button "+".
Volume down	Short press button "-".
Previous song	Long press the button "-".
Next song	Long press the button "+".
Play/pause	Short press ON/OFF button.
Low-battery alert	When at the low battery status ,It make a sound "bee" once per minute).
Power off	Eeaphone will be power off at super low battery status.
Charging	The LED lights red and turns to green after full charged.
Initialization	Press and hold the button "+/-/On" button at same time for 5s.
Refuse a call	Long press "ON/OFF" button.
Recall	Double short press "ON/FF" button.
ANC ON	Slide the ANC switch to "ON" location.
ANC OFF	Slide the ANC switch to "OFF" location.

●If the headset is not connected to any compatible mobile phone or other compatible device within 5 minutes, the headset will automatically shut down.

SPECIFICATION

- Bluetooth version: V4.2
- Frequency range:20Hz～20KHz
- Core design:ANC+CSR
- Support:APTX、A2DP、AVRCP、HFP与HSP
- Sensitivity:101±3db @ 1KHz
- Charging time:1～2h
- Playing time:4～8h
- Standby time:200h

MATCH YOUR PHONE OR OTHER DEVICES

Firstly, you must pair your earphones with your cellphone or computer. If the earphones is paired with a cellphone, the phone and earphones are automatically paired in the effective distance. If you are using a computer, you only need to select an audio connection.

PAIRED AND USED WITH MOBILE PHONES

- Turn on the phone and make sure the bluetooth is enabled.
- Wireless erabuds boot into match.
- Follow the instructions on the phone to find the bluetooth device.
- The device displays the bluetooth device “EB03” on the phone and selects the device.
- When the matching code is displayed on the phone, please enter “0000” as the matching code.
- The phone prompts you to confirm this pairing, please press OK or YES.
- The phone is connected to a wireless erabuds, so you can turn on your audio devices to play music, watch movies, and play games. All sounds come from a bluetooth speaker. Of course, you can also control the volume tracking by pressing the control buttons.

MATCH AND USE THE COMPUTER

- Wireless erabuds boot into matching mode.
- Open the bluetooth control software on your computer or the software that comes with the operating system, such as the IVT software to search for the bluetooth device menu.
- After searching for the wireless erabuds, the wireless erabuds name "EB03" will appear in the list of devices to be explored. Select this device, click the right mouse button, select "match this device" option.
- Finally, turn on your computer's media player or play music, or watch a movie, or play a game, and the wireless erabuds is a headset.

CHARGE THE EARPHONES

- The earphones use the micro USB for charging. This product provides the charging cable which requires the adapter with a 5VDC output .Makesure you charge your headset for at least six hours at the first time, the LED indicates on red when charging andturns green when full charged.

SAFETY RULES

- To ensure your safety,please follow the rules mentioned in this manual Before operation, we would strongly suggest you to read this user manual carefully.
- Be more careful for any edges, uneven surfaces,metal parts, accessories and its packaging so as to prevent any possible injury or damage.
- Do not repair or dismantie this ANC wireless earphones,if you do so,it may resuit in fires,electric shocks,complete breakdown etc.All of above are not with in warranty.
- Do not use any diluents or volatile liquid to clean the ANC wireless earphones.
- Do not use the ANC wireless Earphones in a dangerous location.