TEST REPORT

Product	:	Grid Pad 16
Trade mark	:	Smartbox
Model/Type reference	:	GP16A
Serial Number	:	N/A
Report Number	:	EED32Q82023101
FCC ID	:	2APXM-GP16A
Date of Issue	:	Mar. 20, 2025
Test Standards	:	47 CFR Part 15 Subpart C
Test result	:	PASS

Prepared for:

Smartbox Assistive Technology Limited
Ysobel House, Enigma Commercial Centre, Sandys Road, Malvern, Worcestershire, UK WR14 1JJ

Prepared by:

Centre Testing International Group Co., Ltd.
Hongwei Industrial Zone, Bao'an 70 District, Shenzhen, Guangdong, China
TEL: +86-755-3368 3668
FAX: +86-755-3368 3385

Compiled by:	Keven Tan	Reviewed by:	Frazer Li
	Keven Tan		Frazer Li
Approved by:	Aaron Ma	Date:	Mar. 20, 2025
	Aaron Ma		

Check No.: 7259051224

1 Content

1 CONTENT 2

2 VERSION 3

3 TEST SUMMARY 4

4 GENERAL INFORMATION 5

4.1 CLIENT INFORMATION 5
4.2 GENERAL DESCRIPTION OF EUT 5
4.3 TEST CONFIGURATION 6
4.4 TEST ENVIRONMENT 7
4.5 DESCRIPTION OF SUPPORT UNITS 7
4.6 TEST LOCATION 7
4.7 MEASUREMENT UNCERTAINTY (95% CONFIDENCE LEVELS, K=2) 8

5 EQUIPMENT LIST 9

6 TEST RESULTS AND MEASUREMENT DATA 12

6.1 ANTENNA REQUIREMENT 12
6.2 CONDUCTED EMISSIONS 13
6.3 MAXIMUM CONDUCTED OUTPUT POWER 16
6.4 DTS BANDWIDTH 17
6.5 MAXIMUM POWER SPECTRAL DENSITY 18
6.6 BAND EDGE MEASUREMENTS AND CONDUCTED SPURIOUS EMISSION 19
6.7 RADIATED SPURIOUS EMISSION & RESTRICTED BANDS 20

7 APPENDIX A 35

8 PHOTOGRAPHS OF TEST SETUP 36

9 PHOTOGRAPHS OF EUT CONSTRUCTIONAL DETAILS 38

2 Version

Version No.	Date	Description
00	Mar. 20, 2025	Original

3 Test Summary

Test Item	Test Requirement	Result
Antenna Requirement	47 CFR Part 15 Subpart C Section 15.203/15.247 (c)	PASS
AC Power Line Conducted Emission	47 CFR Part 15 Subpart C Section 15.207	PASS
DTS Bandwidth	47 CFR Part 15 Subpart C Section 15.247 (a)(2)	PASS
Maximum Conducted Output Power	47 CFR Part 15 Subpart C Section 15.247 (b)(3)	PASS
Maximum Power Spectral Density	47 CFR Part 15 Subpart C Section 15.247 (e)	PASS
Band Edge Measurements	47 CFR Part 15 Subpart C Section 15.247(d)	PASS
Conducted Spurious Emissions	47 CFR Part 15 Subpart C Section 15.247(d)	PASS
Radiated Spurious Emission & Restricted bands	47 CFR Part 15 Subpart C Section 15.205/15.209	PASS

4 General Information

4.1 Client Information

Applicant:	Smartbox Assistive Technology Limited
Address of Applicant:	Ysobel House, Enigma Commercial Centre, Sandys Road, Malvern, Worcestershire, UK WR14 1JJ
Manufacturer:	Smartbox Assistive Technology Limited
Address of Manufacturer:	Ysobel House, Enigma Commercial Centre, Sandys Road, Malvern, Worcestershire, UK WR14 1JJ
Factory:	Estone Technology LTD
Address of Factory:	2F, Building No.1, Jia'an Industrial Park, No.2 Long Chang Road, Bao'an, Shenzhen 518101, China.

4.2 General Description of EUT

Product Name:	Grid Pad 16	
Model No.:	GP16A	
Trade mark:	Smartbox	
Product Type:	☐ Mobile ☒ Portable ☐ Fixed Location	
Operation Frequency:	2402MHz~2480MHz	
Modulation Type:	GFSK	
Transfer Rate:	☒ 1Mbps ☒ 2Mbps	
Number of Channel:	40	
Antenna Type:	PCB Antenna	
Antenna Gain:	0.42dBi	
Power Supply:	Adapter:	MODEL: MANGO60S-19AB-ES INPUT:100-240V~50/60Hz,1.5A MAX OUTPUT:19V,3.15A,60W MAX
	Rechargeable Li-ion Battery 1:	Model:875583-3S Nominal Voltage:11.4V Rated Capacity:5820mAh/66.348Wh Charging Limited Voltage:13.05V
	Rechargeable Li-ion Battery 2:	Model:875583-3S Nominal Voltage:11.4V Rated Capacity:5820mAh/66.348Wh Charging Limited Voltage:13.05V
Test Voltage:	DC 11.4V	
Sample Received Date:	Dec. 17, 2024	
Sample tested Date:	Dec. 17, 2024 to Jan. 08, 2025	

Operation Frequency each of channel							
Channel	Frequency (MHz)	Channel	Frequency (MHz)	Channel	Frequency (MHz)	Channel	Frequency (MHz)
0	2402	10	2422	20	2442	30	2462
1	2404	11	2424	21	2444	31	2464
2	2406	12	2426	22	2446	32	2466
3	2408	13	2428	23	2448	33	2468
4	2410	14	2430	24	2450	34	2470
5	2412	15	2432	25	2452	35	2472
6	2414	16	2434	26	2454	36	2474
7	2416	17	2436	27	2456	37	2476
8	2418	18	2438	28	2458	38	2478
9	2420	19	2440	29	2460	39	2480

Note:
In section 15.31(m), regards to the operating frequency range over 10 MHz, the lowest frequency, the middle frequency, and the highest frequency of channel were selected to perform the test, and the selected channel see below:

Channel	Frequency(MHz)
The lowest channel (CH0)	2402
The middle channel (CH19)	2440
The highest channel (CH39)	2480

4.3 Test Configuration

EUT Test Software Settings:				
Test Software:	N/A			
EUT Power Grade:	Default (Power level is built-in set parameters and cannot be changed and selected)			
Use test software to set the lowest frequency, the middle frequency and the highest frequency keep transmitting of the EUT.				
Test Mode	Modulation	Rate	Channel	Frequency(MHz)
Mode a	GFSK	1Mbps	CH0	2402
Mode b	GFSK	1Mbps	CH19	2440
Mode c	GFSK	1Mbps	CH39	2480
Mode d	GFSK	2Mbps	CH0	2402
Mode e	GFSK	2Mbps	CH19	2440
Mode f	GFSK	2Mbps	CH39	2480

4.4 Test Environment

Operating Environment:	
Radiated Spurious Emissions:	
Temperature:	22~25.0 °C
Humidity:	50~55 % RH
Atmospheric Pressure:	1010mbar
Conducted Emissions:	
Temperature:	22~25.0 °C
Humidity:	50~55 % RH
Atmospheric Pressure:	1010mbar
RF Conducted:	
Temperature:	22~25.0 °C
Humidity:	50~55 % RH
Atmospheric Pressure:	1010mbar

4.5 Description of Support Units

The EUT has been tested with associated equipment below.

1）Support equipment

Description	Manufacturer	Model No.	Certification	Supplied by
/	/	/	/	/

4.6 Test Location

All tests were performed at:

Centre Testing International Group Co., Ltd
Building C, Hongwei Industrial Park Block 70, Bao'an District, Shenzhen, China
Telephone: +86 (0) 755 33683668 Fax:+86 (0) 755 33683385
No tests were sub-contracted.
FCC Designation No.: CN1164

4.7 Measurement Uncertainty (95% confidence levels, k=2)

No.	Item	Measurement Uncertainty
1	Radio Frequency	7.9×10^{-8}
2	RF power, conducted	0.46dB (30MHz-1GHz)
		0.55dB (1GHz-40GHz)
3	Radiated Spurious emission test	3.3dB (9kHz-30MHz)
		4.3dB (30MHz-1GHz)
		4.5dB (1GHz-18GHz)
		3.4dB (18GHz-40GHz)
4	Conduction emission	3.5dB (9kHz-150kHz)
		3.1dB (150kHz-30MHz)
5	Temperature test	0.64°C
6	Humidity test	3.8%
7	DC power voltages	0.026%

5 Equipment List

RF test system					
Equipment	**Manufacturer**	**Model No.**	**Serial Number**	**Cal. Date (mm-dd-yyyy)**	**Cal. Due date (mm-dd-yyyy)**
Spectrum Analyzer	Keysight	N9010A	MY54510339	12-05-2024	12-104-2025
Signal Generator	Keysight	N5182B	MY53051549	11-30-2024	11-29-2025
DC Power	Keysight	E3642A	MY56376072	11-30-2024	11-29-2025
Communication test set	R&S	CMW500	169004	03-08-2024	03-07-2025
RF control unit(power unit)	JS Tonscend	JS0806-2	22G8060592	07-22-2024	07-21-2025
Wi-Fi 7GHz Band Extendder	JS Tonscend	TS-WF7U2	2206200002	05-31-2024	05-30-2025
High-low temperature test chamber	Dong Guang Qin Zhuo	LK-80GA	QZ20150611879	11-30-2024	11-29-2025
Temperature/ Humidity Indicator	biaozhi	HM10	1804186	05-29-2024	05-28-2025
BT&WI-FI Automatic test software	JS Tonscend	JS1120-3	V3.3.20	---	---
Spectrum Analyzer	R&S	FSV3044	101509	01-17-2024 02-14-2025	01-16-2025 02-13-2026

Conducted disturbance Test					
Equipment	**Manufacturer**	**Model No.**	**Serial Number**	**Cal. date (mm-dd-yyyy)**	**Cal. Due date (mm-dd-yyyy)**
Receiver	R&S	ESCI	100435	04-18-2024	04-17-2025
Temperature/ Humidity Indicator	Defu	TH128	/	04-25-2024	04-24-2025
LISN	R&S	ENV216	100098	09-19-2024	09-18-2025
Barometer	changchun	DYM3	1188	---	---
Test software	Fara	EZ-EMC	EMC-CON 3A1.1	---	---

Capacitive voltage probe	Schwarzbeck	CVP 9222C	00124	06-18-2024	06-17-2025
ISN	TESEQ	ISN T800	30297	12-05-2024	12-04-2025

3M Semi-anechoic Chamber (2)- Radiated disturbance Test					
Equipment	**Manufacturer**	**Model No.**	**Serial Number**	**Cal. date (mm-dd-yyyy)**	**Cal. Due date (mm-dd-yyyy)**
3M Chamber & Accessory Equipment	TDK	SAC-3	---	05/22/2022	05/21/2025
Receiver	R&S	ESCI7	100938-003	09/07/2024	09/06/2025
Spectrum Analyzer	R&S	FSV40	101200	07/18/2024	07/17/2025
TRILOG Broadband Antenna	schwarzbeck	VULB 9163	9163-618	05/22/2022	05/21/2025
Loop Antenna	Schwarzbeck	FMZB 1519B	1519B-076	04/16/2024	04/15/2025
Microwave Preamplifier	Tonscend	EMC051845SE	980380	12/05/2024	12/04/2025
Horn Antenna	A.H.SYSTEMS	SAS-574	374	07/02/2023	07/01/2026
Horn Antenna	ETS-LINGREN	BBHA 9120D	9120D-1869	04/16/2024	04/15/2025
Preamplifier	Agilent	11909A	12-1	03/22/2024	03/21/2025
Preamplifier	CD	PAP-1840-60	6041.6042	06/19/2024	06/18/2025
Test software	Fara	EZ-EMC	EMEC-3A1-Pre	---	---
Cable line	Fulai(7M)	SF106	5219/6A	05/22/2022	05/21/2025
Cable line	Fulai(6M)	SF106	5220/6A	05/22/2022	05/21/2025
Cable line	Fulai(3M)	SF106	5216/6A	05/22/2022	05/21/2025
Cable line	Fulai(3M)	SF106	5217/6A	05/22/2022	05/21/2025

3M full-anechoic Chamber					
Equipment	**Manufacturer**	**Model No.**	**Serial Number**	**Cal. Date (mm-dd-yyyy)**	**Cal. Due date (mm-dd-yyyy)**
Fully Anechoic Chamber	TDK	FAC-3	---	01-09-2024	01-08-2027
Receiver	Keysight	N9038A	MY57290136	01-09-2024 01-04-2025	01-08-2025 01-03-2026
Spectrum Analyzer	Keysight	N9020B	MY57111112	01-29-2024 01-14-2025	01-28-2025 01-13-2026
Spectrum Analyzer	Keysight	N9030B	MY57140871	01-23-2024 01-14-2025	01-22-2025 01-13-2026
TRILOG Broadband Antenna	Schwarzbeck	VULB 9163	9163-1148	04-28-2024	04-27-2025
Horn Antenna	Schwarzbeck	BBHA 9170	9170-832	04-16-2024	04-15-2025
Horn Antenna	ETS-LINDGREN	3117	57407	07-03-2024	07-02-2025
Preamplifier	EMCI	EMC001330	980563	03-08-2024	03-07-2025
Preamplifier	Tonscend	TAP-011858	AP21B806112	07-18-2024	07-17-2025
Preamplifier	Tonscend	EMC051845SE	980380	12-05-2024	12-04-2025
Temperature/ Humidity Indicator	biaozhi	GM1360	EE1186631	04-07-2024	04-06-2025
RSE Automatic test software	JS Tonscend	JS36-RSE	V4.0.0.0	---	---
Cable line	Times	SFT205-NMSM-2.50M	394812-0001	01-09-2024	01-08-2027
Cable line	Times	SFT205-NMSM-2.50M	394812-0002	01-09-2024	01-08-2027
Cable line	Times	SFT205-NMSM-2.50M	394812-0003	01-09-2024	01-08-2027
Cable line	Times	SFT205-NMSM-2.50M	393495-0001	01-09-2024	01-08-2027
Cable line	Times	EMC104-NMNM-1000	SN160710	01-09-2024	01-08-2027
Cable line	Times	SFT205-NMSM-3.00M	394813-0001	01-09-2024	01-08-2027
Cable line	Times	SFT205-NMNM-1.50M	381964-0001	01-09-2024	01-08-2027
Cable line	Times	SFT205-NMSM-7.00M	394815-0001	01-09-2024	01-08-2027
Cable line	Times	HF160-KMKM-3.00M	393493-0001	01-09-2024	01-08-2027

6 Test results and Measurement Data

6.1 Antenna Requirement

Standard requirement:	47 CFR Part 15C Section 15.203 /247(c)
15.203 requirement: An intentional radiator shall be designed to ensure that no antenna other than that furnished by the responsible party shall be used with the device. The use of a permanently attached antenna or of an antenna that uses a unique coupling to the intentional radiator, the manufacturer may design the unit so that a broken antenna can be replaced by the user, but the use of a standard antenna jack or electrical connector is prohibited. 15.247(b) (4) requirement: The conducted output power limit specified in paragraph (b) of this section is based on the use of antennas with directional gains that do not exceed 6 dBi. Except as shown in paragraph (c) of this section, if transmitting antennas of directional gain greater than 6 dBi are used, the conducted output power from the intentional radiator shall be reduced below the stated values in paragraphs (b)(1), (b)(2), and (b)(3) of this section, as appropriate, by the amount in dB that the directional gain of the antenna exceeds 6 dBi.	
EUT Antenna:	Please see Internal photos
The antenna is PCB antenna. The best case gain of the antenna is 0.42dBi.	

6.2 Conducted Emissions

Test Requirement:	47 CFR Part 15C Section 15.207
Test Method:	ANSI C63.10: 2013
Test Frequency Range:	150kHz to 30MHz
Receiver setup:	RBW=9 kHz, VBW=30 kHz, Sweep time=auto
Limit:	

Frequency range (MHz)	Limit (dBuV)	
	Quasi-peak	Average
0.15-0.5	66 to 56*	56 to 46*
0.5-5	56	46
5-30	60	50

* Decreases with the logarithm of the frequency.

Test Setup:

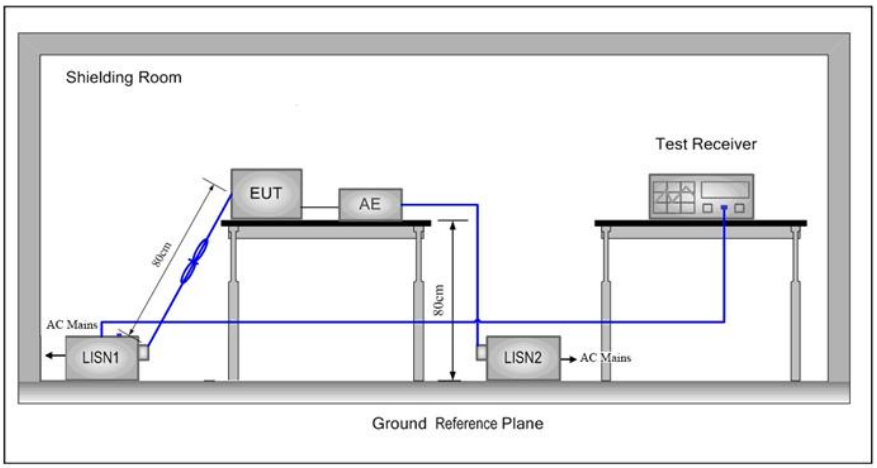

Test Procedure:

1) The mains terminal disturbance voltage test was conducted in a shielded room.
2) The EUT was connected to AC power source through a LISN 1 (Line Impedance Stabilization Network) which provides a 50Ω/50μH + 5Ω linear impedance. The power cables of all other units of the EUT were connected to a second LISN 2, which was bonded to the ground reference plane in the same way as the LISN 1 for the unit being measured. A multiple socket outlet strip was used to connect multiple power cables to a single LISN provided the rating of the LISN was not exceeded.
3) The tabletop EUT was placed upon a non-metallic table 0.8m above the ground reference plane. And for floor-standing arrangement, the EUT was placed on the horizontal ground reference plane.
4) The test was performed with a vertical ground reference plane. The rear of the EUT shall be 0.4 m from the vertical ground reference plane. The vertical ground reference plane was bonded to the horizontal ground reference plane. The LISN 1 was placed 0.8 m from the boundary of the unit under test and bonded to a ground reference plane for LISNs mounted on top of the ground reference plane. This distance was between the closest points of the LISN 1 and the EUT. All other units of the EUT and associated equipment was at least 0.8 m from the LISN 2.
5) In order to find the maximum emission, the relative positions of equipment and all of the interface cables must be changed according to ANSI C63.10: 2013 on conducted measurement.

Test Mode: All modes were tested, only the worst case mode a was recorded in the report.

Test Results:	Pass

Measurement Data

Live line:

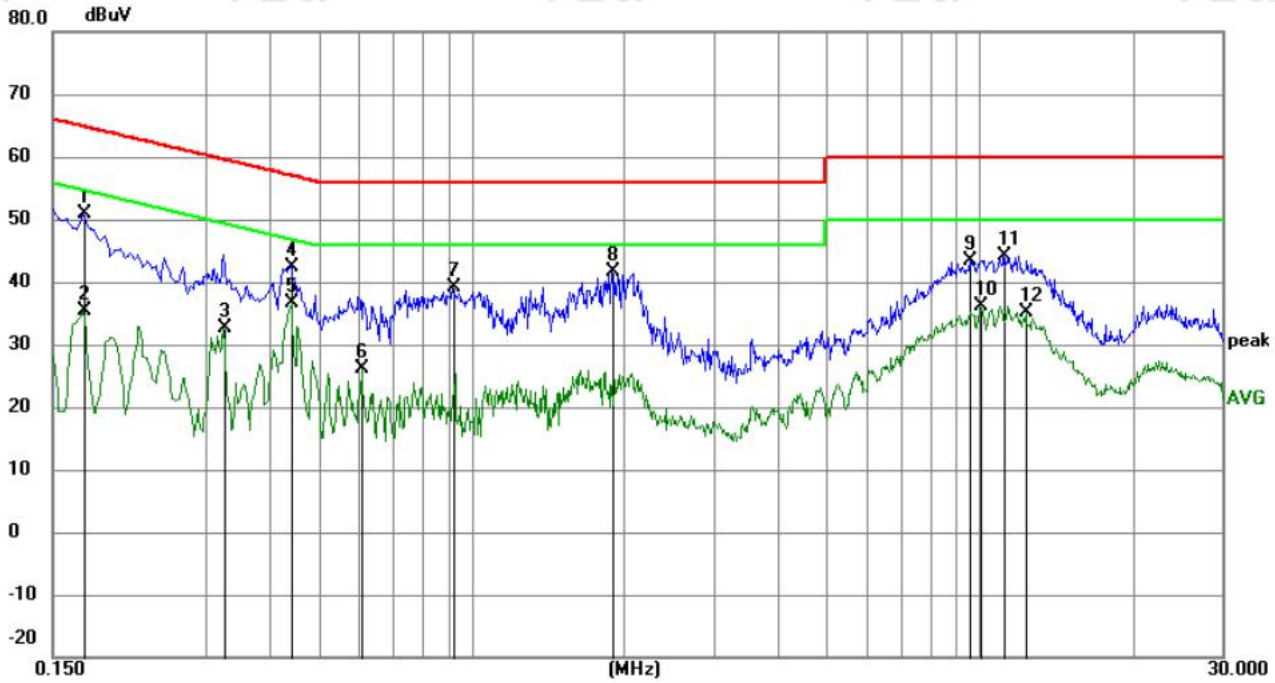

No.	Mk.	Freq.	Reading Level	Correct Factor	Measure-ment	Limit	Margin		
		MHz	dBuV	dB	dBuV	dBuV	dB	Detector	Comment
1		0.1723	40.52	10.25	50.77	64.85	-14.08	QP	
2		0.1723	25.17	10.25	35.42	54.85	-19.43	AVG	
3		0.3255	22.60	10.12	32.72	49.57	-16.85	AVG	
4		0.4425	32.41	10.09	42.50	57.01	-14.51	QP	
5	*	0.4425	26.59	10.09	36.68	47.01	-10.33	AVG	
6		0.6088	16.11	10.10	26.21	46.00	-19.79	AVG	
7		0.9193	29.02	10.17	39.19	56.00	-16.81	QP	
8		1.8912	31.55	10.17	41.72	56.00	-14.28	QP	
9		9.5907	33.44	9.96	43.40	60.00	-16.60	QP	
10		10.0588	26.13	9.95	36.08	50.00	-13.92	AVG	
11		11.1615	34.28	9.93	44.21	60.00	-15.79	QP	
12		12.3583	25.11	9.91	35.02	50.00	-14.98	AVG	

Remark:

1. The following Quasi-Peak and Average measurements were performed on the EUT:
2. Final Test Level =Receiver Reading + LISN Factor + Cable Loss.
3. If the Peak value under Average limit, the Average value is not recorded in the report.

Neutral line:

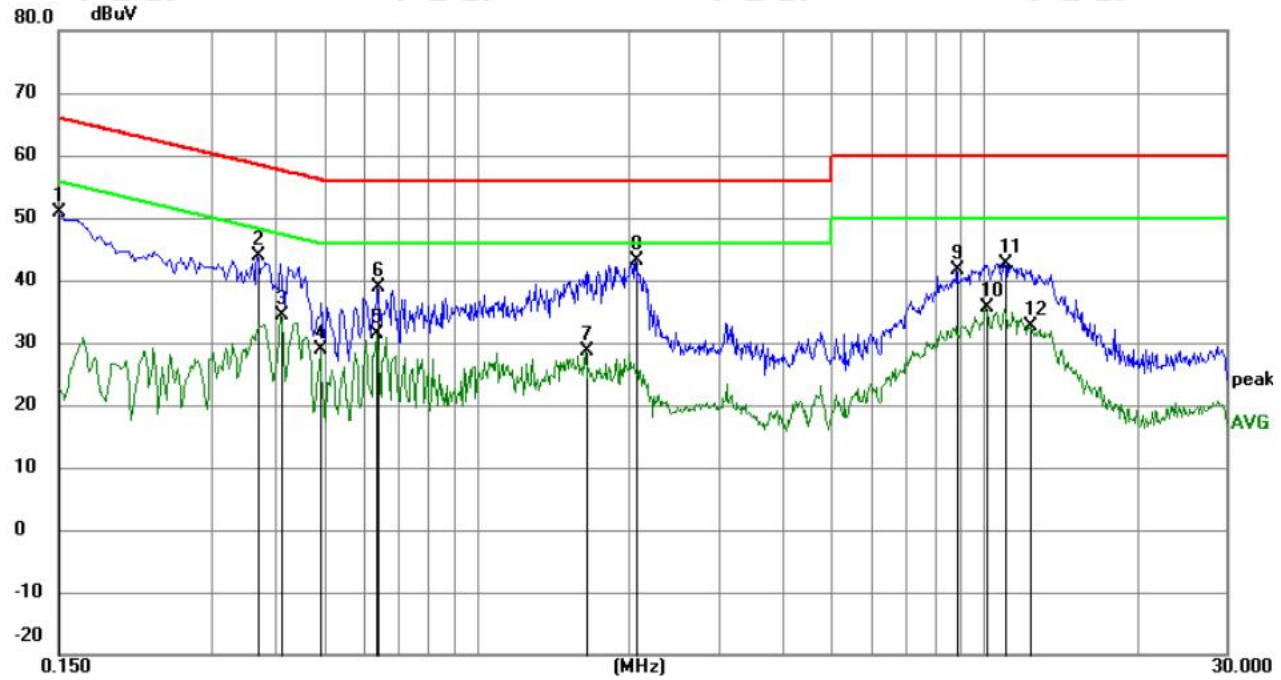

No.	Mk.	Freq.	Reading Level	Correct Factor	Measure-ment	Limit	Margin		
		MHz	dBuV	dB	dBuV	dBuV	dB	Detector	Comment
1		0.1500	40.52	10.28	50.80	66.00	-15.20	QP	
2		0.3704	33.84	10.10	43.94	58.49	-14.55	QP	
3		0.4108	24.37	10.09	34.46	47.63	-13.17	AVG	
4		0.4919	18.80	10.08	28.88	46.14	-17.26	AVG	
5		0.6359	21.33	10.11	31.44	46.00	-14.56	AVG	
6		0.6402	28.88	10.11	38.99	56.00	-17.01	QP	
7		1.6437	18.43	10.17	28.60	46.00	-17.40	AVG	
8	*	2.0622	32.89	10.17	43.06	56.00	-12.94	QP	
9		8.8260	31.77	9.98	41.75	60.00	-18.25	QP	
10		10.1038	25.59	9.95	35.54	50.00	-14.46	AVG	
11		10.9948	32.70	9.93	42.63	60.00	-17.37	QP	
12		12.3583	22.60	9.91	32.51	50.00	-17.49	AVG	

Remark:

1. The following Quasi-Peak and Average measurements were performed on the EUT:
2. Final Test Level =Receiver Reading + LISN Factor + Cable Loss.
3. If the Peak value under Average limit, the Average value is not recorded in the report.

6.3 Maximum Conducted Output Power

Test Requirement:	47 CFR Part 15C Section 15.247 (b)(3)
Test Method:	ANSI C63.10 2013
Test Setup:	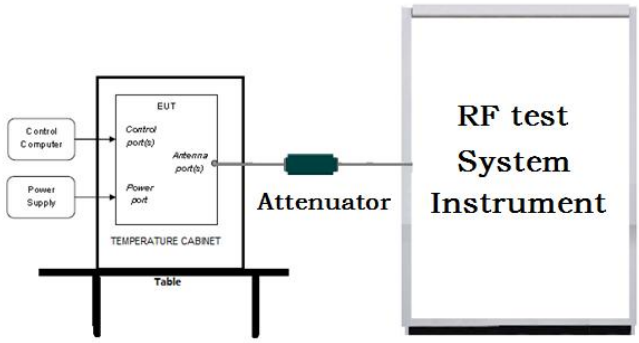 Remark: Offset=Cable loss+ attenuation factor.
Test Procedure:	a) Set the RBW ⩾ DTS bandwidth. b) Set VBW ⩾ 3 × RBW. c) Set span ⩾ 3 x RBW d) Sweep time = auto couple. e) Detector = peak. f) Trace mode = max hold. g) Allow trace to fully stabilize. h) Use peak marker function to determine the peak amplitude level.
Limit:	30dBm
Test Mode:	Refer to clause 5.3
Test Results:	Refer to Appendix A

6.4 DTS Bandwidth

Test Requirement:	47 CFR Part 15C Section 15.247 (a)(2)
Test Method:	ANSI C63.10 2013
Test Setup:	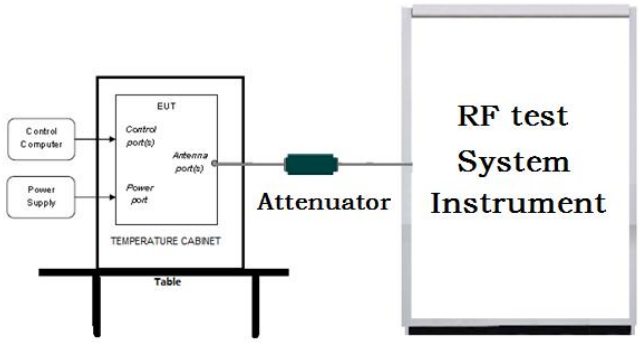 Remark: Offset=Cable loss+ attenuation factor.
Test Procedure:	a) Set RBW = 100 kHz. b) Set the VBW ⩾[3 × RBW]. c) Detector = peak. d) Trace mode = max hold. e) Sweep = auto couple. f) Allow the trace to stabilize. g) Measure the maximum width of the emission that is constrained by the frequencies associated with the two outermost amplitude points (upper and lower frequencies) that are attenuated by 6 dB relative to the maximum level measured in the fundamental emission.
Limit:	≥ 500 kHz
Test Mode:	Refer to clause 5.3
Test Results:	Refer to Appendix A

6.5 Maximum Power Spectral Density

Test Requirement:	47 CFR Part 15C Section 15.247 (e)
Test Method:	ANSI C63.10 2013
Test Setup:	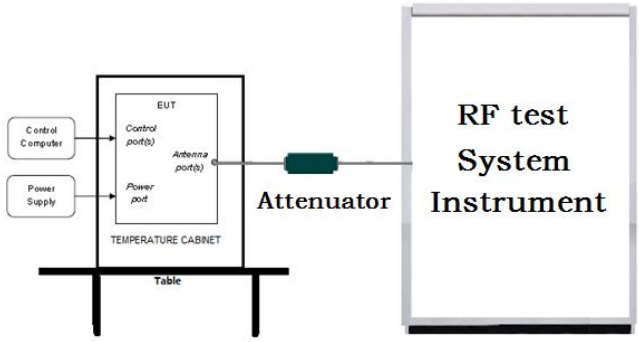 Remark: Offset=Cable loss+ attenuation factor.
Test Procedure:	a) Set analyzer center frequency to DTS channel center frequency. b) Set the span to 1.5 times the DTS bandwidth. c) Set the RBW to 3 kHz ⩽ RBW ⩽ 100 kHz. d) Set the VBW ⩾ [3 × RBW]. e) Detector = peak. f) Sweep time = auto couple. g) Trace mode = max hold. h) Allow trace to fully stabilize. i) Use the peak marker function to determine the maximum amplitude level within the RBW. j) If measured value exceeds requirement, then reduce RBW (but no less than 3 kHz) and repeat.
Limit:	≤8.00dBm/3kHz
Test Mode:	Refer to clause 5.3
Test Results:	Refer to Appendix A

6.6 Band Edge measurements and Conducted Spurious Emission

Test Requirement:	47 CFR Part 15C Section 15.247 (d)
Test Method:	ANSI C63.10 2013
Test Setup:	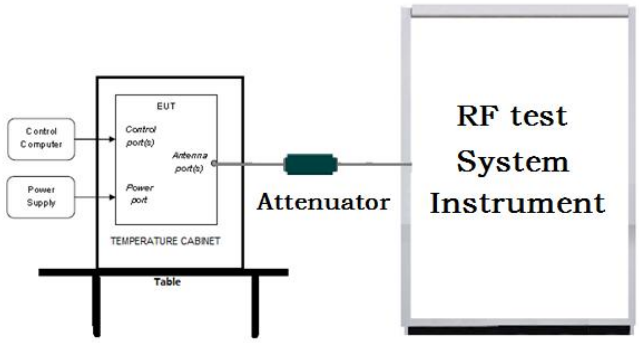 Remark: Offset=Cable loss+ attenuation factor.
Test Procedure:	a) Set RBW =100KHz. b) Set VBW = 300KHz. c) Sweep time = auto couple. d) Detector = peak. e) Trace mode = max hold. f) Allow trace to fully stabilize. g) Use peak marker function to determine the peak amplitude level.
Limit:	In any 100 kHz bandwidth outside the frequency band in which the spread spectrum intentional radiator is operating, the radio frequency power that is produced by the intentional radiator shall be at least 20 dB below that in the 100 kHz bandwidth within the band that contains the highest level of the desired power, based on either an RF conducted or a radiated measurement.
Test Mode:	Refer to clause 5.3
Test Results:	Refer to Appendix A

6.7 Radiated Spurious Emission & Restricted bands

Test Requirement:	47 CFR Part 15C Section 15.209 and 15.205
Test Method:	ANSI C63.10 2013
Test Site:	Measurement Distance: 3m (Semi-Anechoic Chamber)
Receiver Setup:	

Frequency	Detector	RBW	VBW	Remark
0.009MHz-0.090MHz	Peak	10kHz	30kHz	Peak
0.009MHz-0.090MHz	Average	10kHz	30kHz	Average
0.090MHz-0.110MHz	Quasi-peak	10kHz	30kHz	Quasi-peak
0.110MHz-0.490MHz	Peak	10kHz	30kHz	Peak
0.110MHz-0.490MHz	Average	10kHz	30kHz	Average
0.490MHz -30MHz	Quasi-peak	10kHz	30kHz	Quasi-peak
30MHz-1GHz	Quasi-peak	100 kHz	300kHz	Quasi-peak
Above 1GHz	Peak	1MHz	3MHz	Peak
	Peak	1MHz	10kHz	Average

Limit:

Frequency	Field strength (microvolt/meter)	Limit (dBuV/m)	Remark	Measurement distance (m)
0.009MHz-0.490MHz	2400/F(kHz)	-	-	300
0.490MHz-1.705MHz	24000/F(kHz)	-	-	30
1.705MHz-30MHz	30	-	-	30
30MHz-88MHz	100	40.0	Quasi-peak	3
88MHz-216MHz	150	43.5	Quasi-peak	3
216MHz-960MHz	200	46.0	Quasi-peak	3
960MHz-1GHz	500	54.0	Quasi-peak	3
Above 1GHz	500	54.0	Average	3

Note: 15.35(b), Unless otherwise specified, the limit on peak radio frequency emissions is 20dB above the maximum permitted average emission limit applicable to the equipment under test. This peak limit applies to the total peak emission level radiated by the device.

Test Setup:	

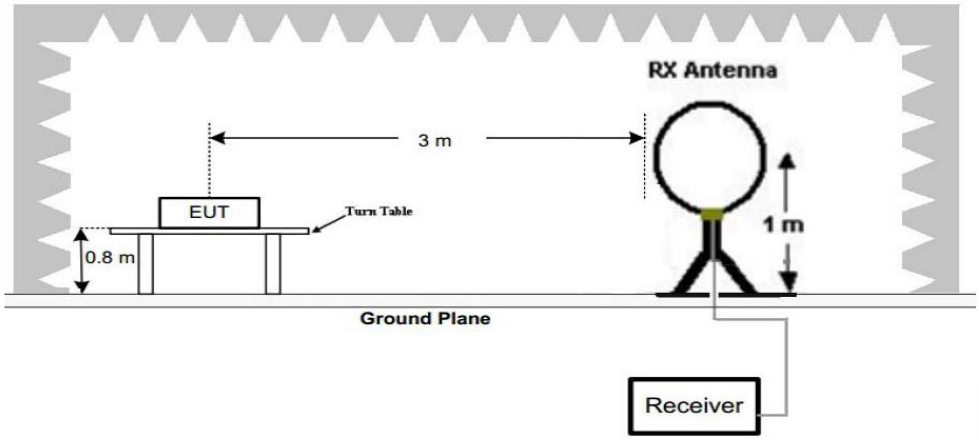

Figure 1. Below 30MHz

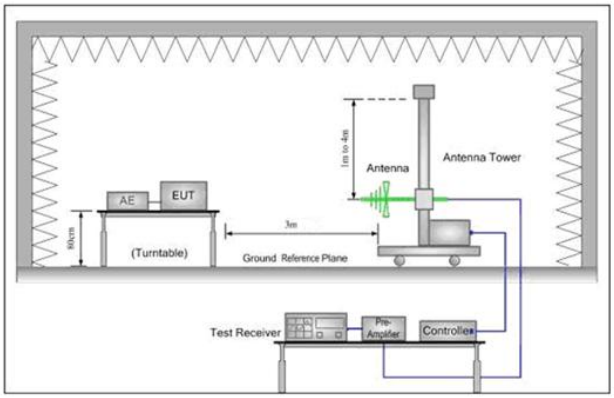

Figure 2. 30MHz to 1GHz

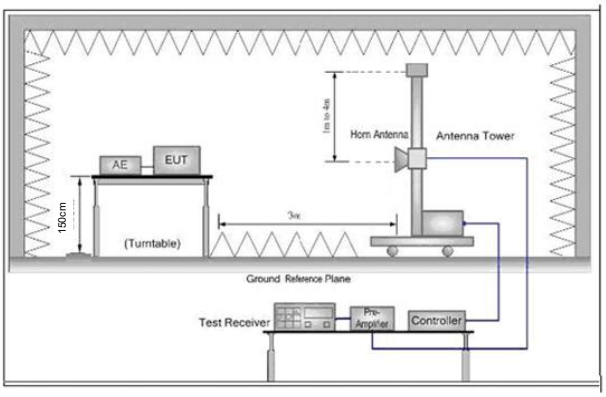

Figure 3. Above 1 GHz

Test Procedure:	a. 1) Below 1G: The EUT was placed on the top of a rotating table 0.8 meters above the ground at a 3 meter semi-anechoic camber. The table was rotated 360 degrees to determine the position of the highest radiation. 2) Above 1G: The EUT was placed on the top of a rotating table 1.5 meters above the ground at a 3 meter semi-anechoic camber. The table was rotated 360 degrees to determine the position of the highest radiation. Note: For the radiated emission test above 1GHz: Place the measurement antenna away from each area of the EUT determined to be a source of emissions at the specified measurement distance, while keeping the measurement antenna aimed at the source of emissions at each frequency of significant emissions, with polarization oriented for maximum response. The measurement antenna may have to be higher or lower than the EUT, depending on the radiation pattern of the emission and staying aimed at the emission source for receiving the maximum signal. The final measurement antenna elevation shall be that which maximizes the emissions. The measurement antenna elevation for maximum emissions shall be restricted to a range of heights of from 1 m to 4 m above the ground or reference ground plane. b. The EUT was set 3 meters away from the interference-receiving antenna, which was mounted on the top of a variable-height antenna tower. c. The antenna height is varied from one meter to four meters above the ground to determine the maximum value of the field strength. Both

	horizontal and vertical polarizations of the antenna are set to make the measurement. d. For each suspected emission, the EUT was arranged to its worst case and then the antenna was tuned to heights from 1 meter to 4 meters (for the test frequency of below 30MHz, the antenna was tuned to heights 1 meter) and the rotatable table was turned from 0 degrees to 360 degrees to find the maximum reading. e. The test-receiver system was set to Peak Detect Function and Specified Bandwidth with Maximum Hold Mode. f. If the emission level of the EUT in peak mode was 10dB lower than the limit specified, then testing could be stopped and the peak values of the EUT would be reported. Otherwise the emissions that did not have 10dB margin would be re-tested one by one using peak, quasi-peak or average method as specified and then reported in a data sheet. g. Test the EUT in the lowest channel (2402MHz),the middle channel (2440MHz),the Highest channel (2480MHz) h. The radiation measurements are performed in X, Y, Z axis positioning for Transmitting mode, and found the X axis positioning which it is the worst case. i. Repeat above procedures until all frequencies measured was complete.
Test Mode:	Refer to clause 5.3
Test Results:	Pass

Radiated Spurious Emission below 1GHz:

During the test, the Radiates Emission from 30MHz to 1GHz was performed in all modes, only the worst case highest channel of GFSK 1M was recorded in the report.

Horizontal:

Test Graph

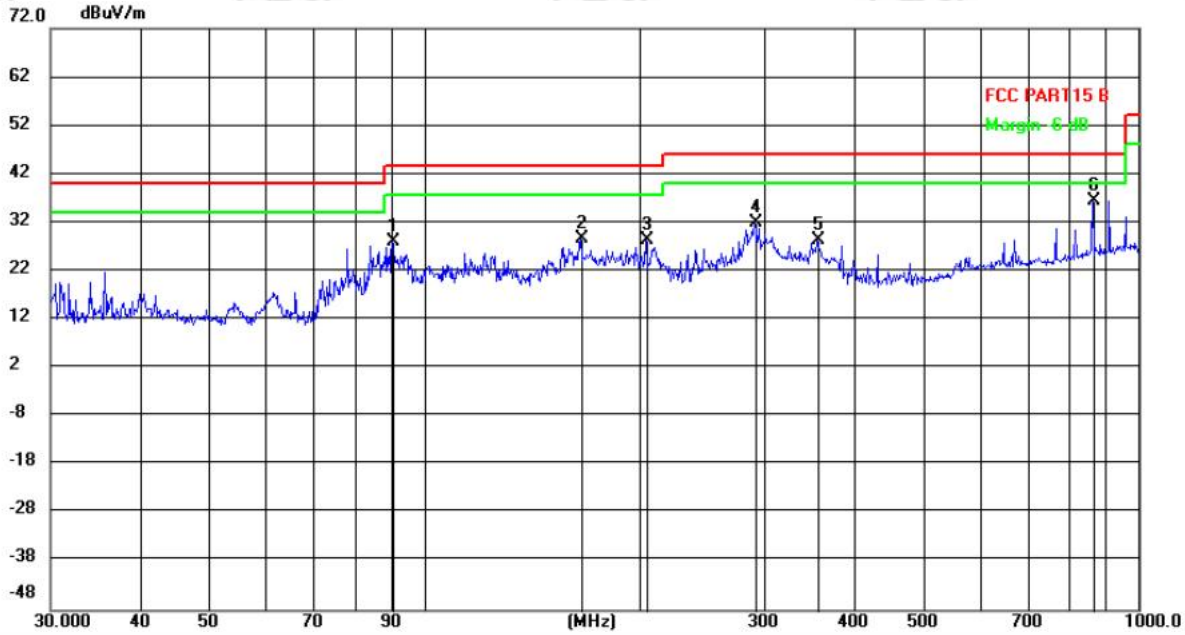

No.	Mk.	Freq.	Reading Level	Correct Factor	Measure-ment	Limit	Margin		Antenna Height	Table Degree	
		MHz	dBuV	dB/m	dBuV/m	dBuV/m	dB	Detector	cm	degree	Comment
1		90.3471	16.37	11.72	28.09	43.50	-15.41	QP	199	306	
2		165.5447	17.97	10.66	28.63	43.50	-14.87	QP	100	278	
3		204.6319	15.67	12.55	28.22	43.50	-15.28	QP	199	50	
4		290.3224	16.05	15.78	31.83	46.00	-14.17	QP	100	247	
5		356.4257	11.21	17.22	28.43	46.00	-17.57	QP	100	118	
6	*	864.1161	11.03	25.41	36.44	46.00	-9.56	QP	199	273	

Vertical:

Test Graph

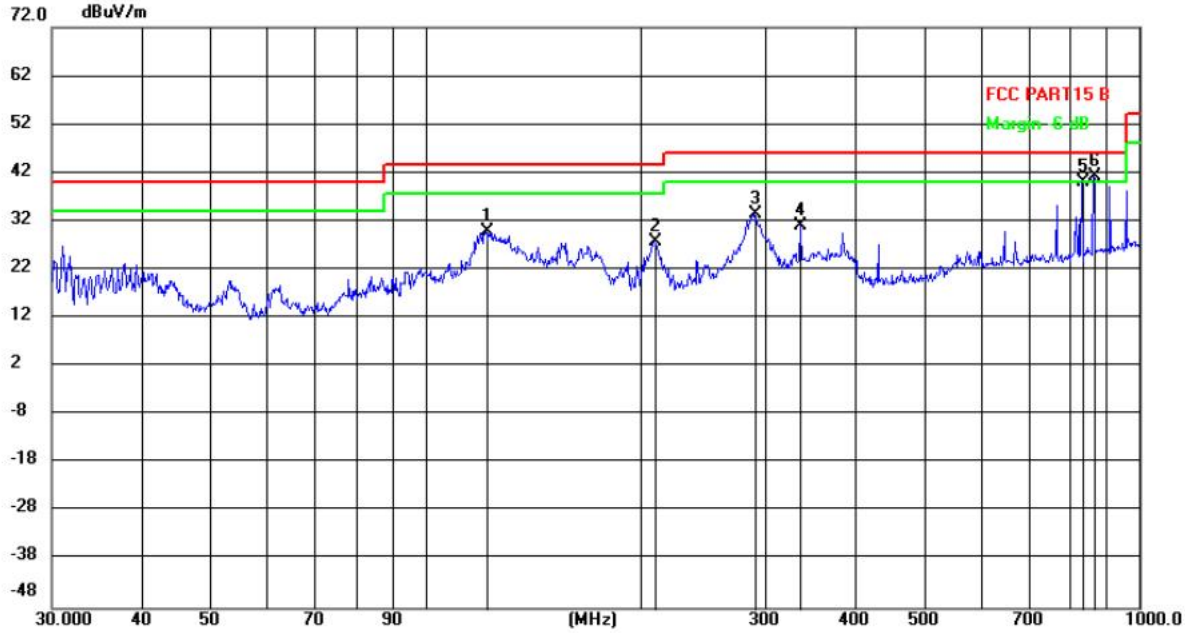

No.	Mk.	Freq.	Reading Level	Correct Factor	Measure-ment	Limit	Margin		Antenna Height	Table Degree	
		MHz	dBuV	dB/m	dBuV/m	dBuV/m	dB	Detector	cm	degree	Comment
1		121.6765	18.59	11.36	29.95	43.50	-13.55	QP	100	221	
2		209.3495	14.89	12.73	27.62	43.50	-15.88	QP	100	7	
3		289.3062	17.84	15.75	33.59	46.00	-12.41	QP	200	289	
4		335.9762	14.31	16.83	31.14	46.00	-14.86	QP	100	7	
5		830.9827	15.05	24.94	39.99	46.00	-6.01	QP	200	310	
6	*	864.1161	15.85	25.41	41.26	46.00	-4.74	QP	100	7	

Radiated Spurious Emission above 1GHz:

During the test, the Radiated Spurious Emission from above 1GHz was performed in all modes, only the worst case BLE 1M was recorded in the report.

Mode:			Bluetooth LE GFSK Transmitting			Channel:		2402 MHz	
NO	Freq. [MHz]	Factor [dB]	Reading [dBμV]	Level [dBμV/m]	Limit [dBμV/m]	Margin [dB]	Result	Polarity	Remark
1	1950.73	17.03	36.00	53.03	74.00	20.97	Pass	H	PK
2	3801.0534	-11.90	51.40	39.50	74.00	34.50	Pass	H	PK
3	5956.1971	-6.63	47.24	40.61	74.00	33.39	Pass	H	PK
4	9260.4174	0.93	45.22	46.15	74.00	27.85	Pass	H	PK
5	11976.5984	5.88	43.99	49.87	74.00	24.13	Pass	H	PK
6	15249.8167	14.00	38.06	52.06	74.00	21.94	Pass	H	PK
7	1526.3018	10.70	37.11	47.81	74.00	26.19	Pass	V	PK
8	1864.7243	15.36	37.76	53.12	74.00	20.88	Pass	V	PK
9	3456.0304	-12.88	54.57	41.69	74.00	32.31	Pass	V	PK
10	5371.1581	-8.33	48.14	39.81	74.00	34.19	Pass	V	PK
11	7844.323	-2.74	46.93	44.19	74.00	29.81	Pass	V	PK
12	11949.5966	5.85	44.05	49.90	74.00	24.10	Pass	V	PK

Mode:			Bluetooth LE GFSK Transmitting			Channel:		2440 MHz	
NO	Freq. [MHz]	Factor [dB]	Reading [dBμV]	Level [dBμV/m]	Limit [dBμV/m]	Margin [dB]	Result	Polarity	Remark
1	1818.5879	14.61	37.69	52.30	74.00	21.70	Pass	H	PK
2	3448.0299	-12.65	52.97	40.32	74.00	33.68	Pass	H	PK
3	5050.1367	-8.81	48.60	39.79	74.00	34.21	Pass	H	PK
4	7880.3254	-2.62	45.86	43.24	74.00	30.76	Pass	H	PK
5	11361.5574	4.91	44.07	48.98	74.00	25.02	Pass	H	PK
6	15248.8166	13.92	37.72	51.64	74.00	22.36	Pass	H	PK
7	1906.7271	15.68	36.48	52.16	74.00	21.84	Pass	V	PK
8	3686.0457	-12.69	53.04	40.35	74.00	33.65	Pass	V	PK
9	5068.1379	-9.09	48.40	39.31	74.00	34.69	Pass	V	PK
10	7314.2876	-4.48	46.41	41.93	74.00	32.07	Pass	V	PK
11	10298.4866	3.83	43.97	47.80	74.00	26.20	Pass	V	PK
12	15248.8166	13.92	38.32	52.24	74.00	21.76	Pass	V	PK

Mode:			Bluetooth LE GFSK Transmitting			Channel:		2480 MHz	
NO	Freq. [MHz]	Factor [dB]	Reading [dBμV]	Level [dBμV/m]	Limit [dBμV/m]	Margin [dB]	Result	Polarity	Remark
1	1877.7919	15.40	36.88	52.28	74.00	21.72	Pass	H	PK
2	3375.025	-13.01	53.35	40.34	74.00	33.66	Pass	H	PK
3	5071.1381	-9.14	48.13	38.99	74.00	35.01	Pass	H	PK
4	6419.2279	-5.93	46.83	40.90	74.00	33.10	Pass	H	PK
5	9248.4166	0.74	44.95	45.69	74.00	28.31	Pass	H	PK
6	12970.6647	7.73	42.34	50.07	74.00	23.93	Pass	H	PK
7	1816.7211	14.57	37.61	52.18	74.00	21.82	Pass	V	PK
8	3685.0457	-12.70	52.43	39.73	74.00	34.27	Pass	V	PK
9	5463.1642	-8.75	49.00	40.25	74.00	33.75	Pass	V	PK
10	8533.3689	-2.01	45.47	43.46	74.00	30.54	Pass	V	PK
11	11264.551	5.00	45.54	50.54	74.00	23.46	Pass	V	PK
12	15249.8167	14.00	37.30	51.30	74.00	22.70	Pass	V	PK

Remark:

1) The field strength is calculated by adding the Antenna Factor, Cable Factor & Preamplifier. The basic equation with a sample calculation is as follows:
   Final Test Level =Receiver Reading + Antenna Factor + Cable Factor – Preamplifier Factor
2) Scan from 9kHz to 25GHz, the disturbance above 10GHz and below 30MHz was very low. As shown in this section, for frequencies above 1GHz, the field strength limits are based on average limits. However, the peak field strength of any emission shall not exceed the maximum permitted average limits specified above by more than 20 dB under any condition of modulation. So, only the peak measurements were shown in the report.

Restricted bands:

Test plot as follows:

EUT_Name		Test_Model	
Test_Mode	BLE 1M GFSK Transmitting	Test_Frequency	2402MHz
Tset_Engineer	Aiden.wang	Test_Date	2024/12/20
Remark			

Test Graph

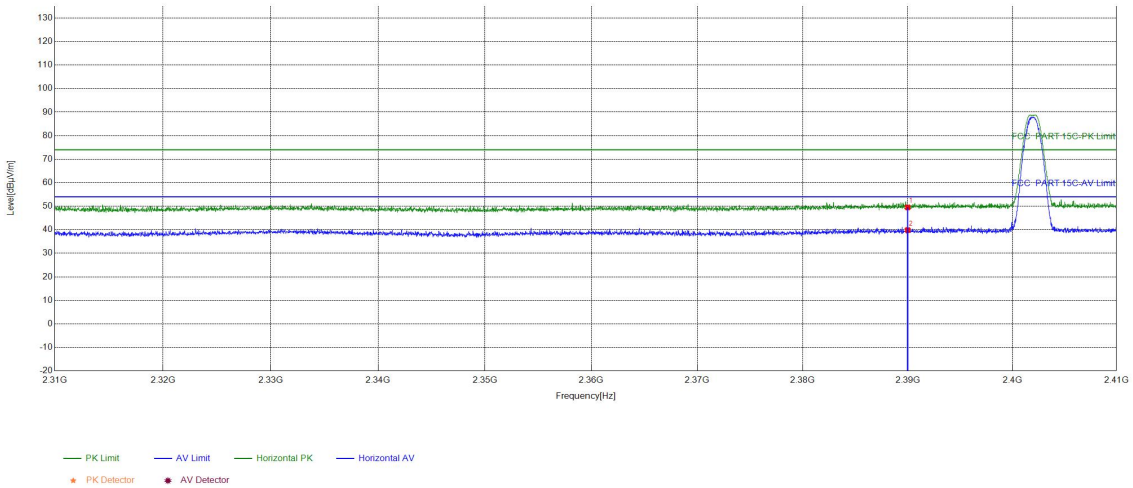

Suspected List									
NO	Freq. [MHz]	Factor [dB]	Reading [dBμV]	Level [dBμV/m]	Limit [dBμV/m]	Margin [dB]	Result	Polarity	Remark
1	2390	15.31	34.20	49.51	74.00	24.49	PASS	Horizontal	PK
2	2390	15.31	24.55	39.86	54.00	14.14	PASS	Horizontal	AV

EUT_Name		Test_Model	
Test_Mode	BLE 1M GFSK Transmitting	Test_Frequency	2402MHz
Tset_Engineer	Aiden.wang	Test_Date	2024/12/20
Remark			

Test Graph

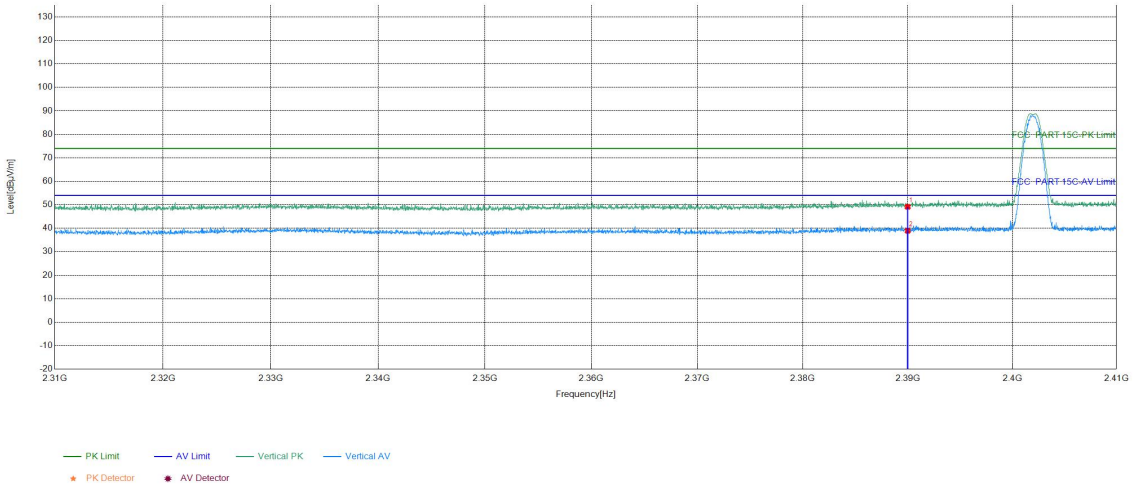

Suspected List									
NO	Freq. [MHz]	Factor [dB]	Reading [dBμV]	Level [dBμV/m]	Limit [dBμV/m]	Margin [dB]	Result	Polarity	Remark
1	2390	15.31	33.85	49.16	74.00	24.84	PASS	Vertical	PK
2	2390	15.31	23.62	38.93	54.00	15.07	PASS	Vertical	AV

EUT_Name		Test_Model	
Test_Mode	BLE 1M GFSK Transmitting	Test_Frequency	2480MHz
Tset_Engineer	Aiden.wang	Test_Date	2024/12/20
Remark			

Test Graph

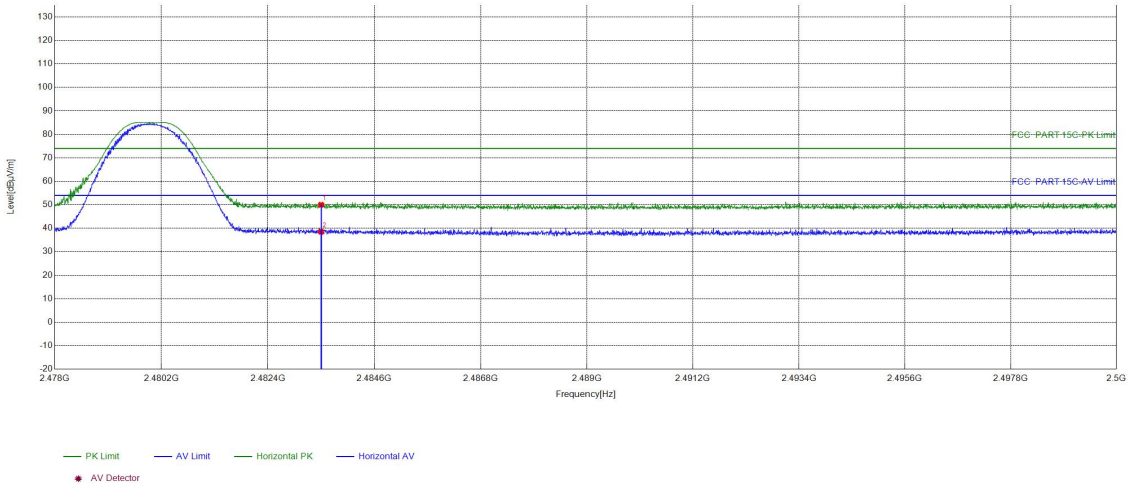

Suspected List									
NO	Freq. [MHz]	Factor [dB]	Reading [dBμV]	Level [dBμV/m]	Limit [dBμV/m]	Margin [dB]	Result	Polarity	Remark
1	2483.5	15.16	34.86	50.02	74.00	23.98	PASS	Horizontal	PK
2	2483.5	15.16	23.37	38.53	54.00	15.47	PASS	Horizontal	AV

EUT_Name		Test_Model	
Test_Mode	BLE 1M GFSK Transmitting	Test_Frequency	2480MHz
Tset_Engineer	Aiden.wang	Test_Date	2024/12/20
Remark			

Test Graph

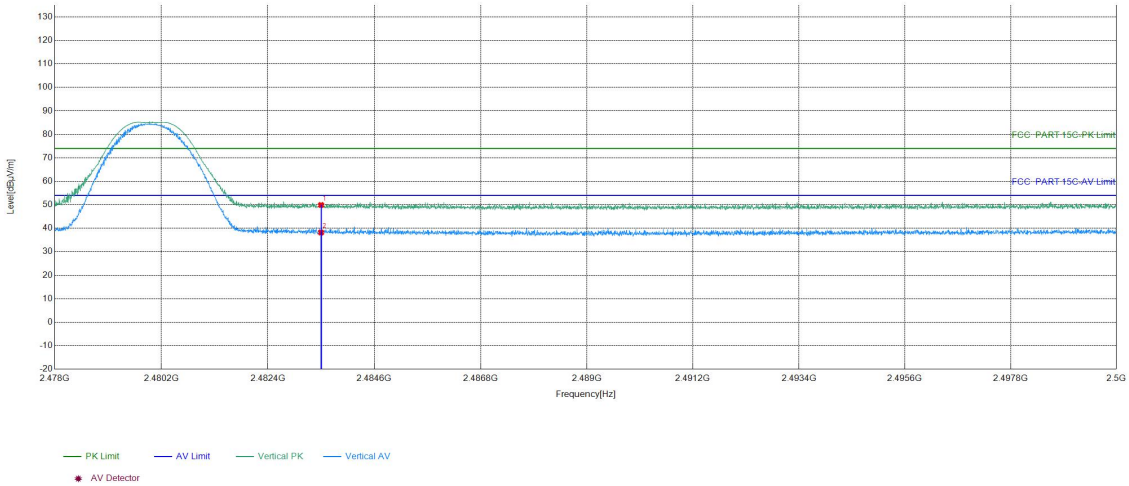

Suspected List									
NO	Freq. [MHz]	Factor [dB]	Reading [dBμV]	Level [dBμV/m]	Limit [dBμV/m]	Margin [dB]	Result	Polarity	Remark
1	2483.5	15.16	34.77	49.93	74.00	24.07	PASS	Vertical	PK
2	2483.5	15.16	23.03	38.19	54.00	15.81	PASS	Vertical	AV

EUT_Name		Test_Model	
Test_Mode	BLE 2M GFSK Transmitting	Test_Frequency	2402MHz
Tset_Engineer	Aiden.wang	Test_Date	2024/12/20
Remark			

Test Graph

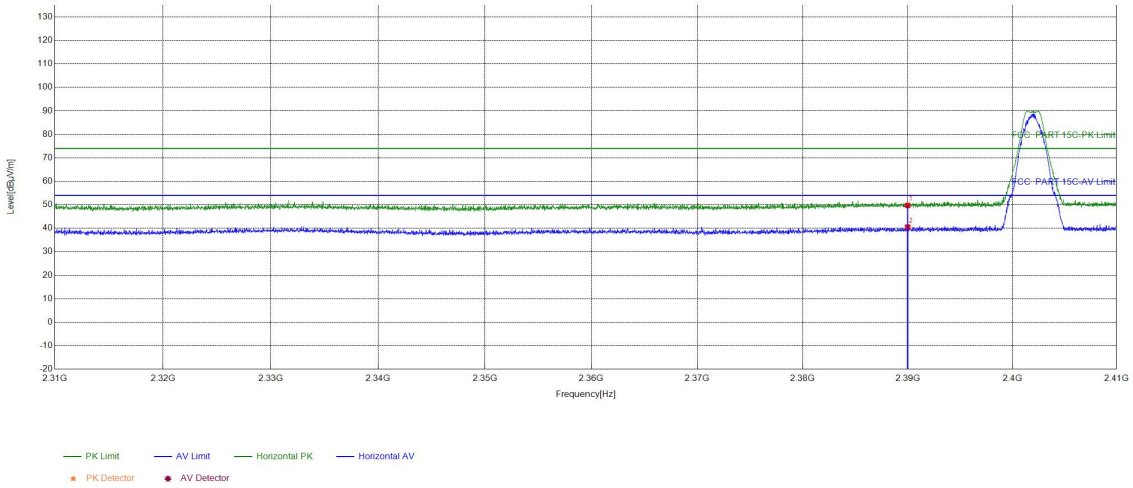

Suspected List									
NO	Freq. [MHz]	Factor [dB]	Reading [dBμV]	Level [dBμV/m]	Limit [dBμV/m]	Margin [dB]	Result	Polarity	Remark
1	2390	15.31	34.44	49.75	74.00	24.25	PASS	Horizontal	PK
2	2390	15.31	25.18	40.49	54.00	13.51	PASS	Horizontal	AV

EUT_Name		Test_Model	
Test_Mode	BLE 2M GFSK Transmitting	Test_Frequency	2402MHz
Tset_Engineer	Aiden.wang	Test_Date	2024/12/20
Remark			

Test Graph

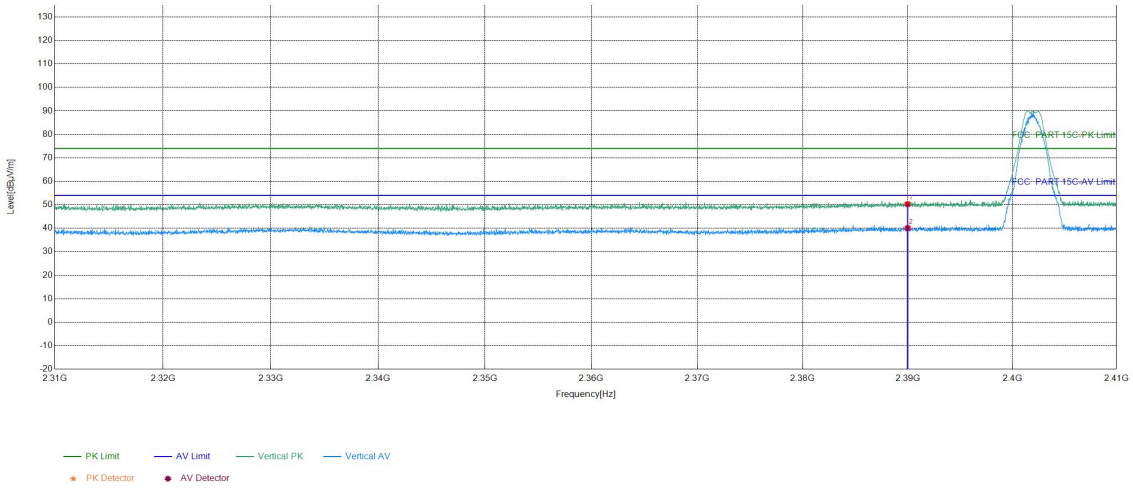

Suspected List									
NO	Freq. [MHz]	Factor [dB]	Reading [dBμV]	Level [dBμV/m]	Limit [dBμV/m]	Margin [dB]	Result	Polarity	Remark
1	2390	15.31	34.93	50.24	74.00	23.76	PASS	Vertical	PK
2	2390	15.31	24.72	40.03	54.00	13.97	PASS	Vertical	AV

EUT_Name		Test_Model	
Test_Mode	BLE 2M GFSK Transmitting	Test_Frequency	2480MHz
Tset_Engineer	Aiden.wang	Test_Date	2024/12/20
Remark			

Test Graph

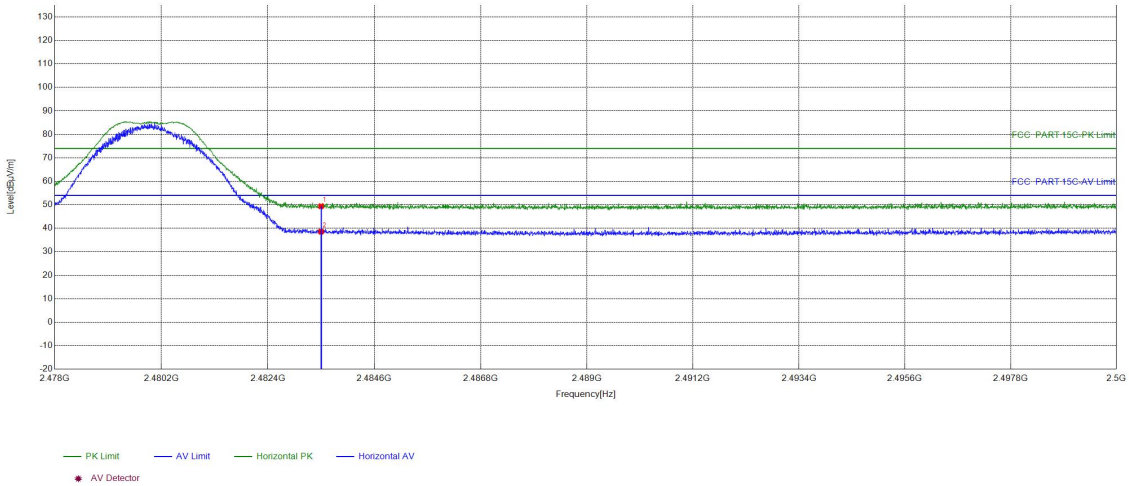

Suspected List									
NO	Freq. [MHz]	Factor [dB]	Reading [dBµV]	Level [dBµV/m]	Limit [dBµV/m]	Margin [dB]	Result	Polarity	Remark
1	2483.5	15.16	34.23	49.39	74.00	24.61	PASS	Horizontal	PK
2	2483.5	15.16	23.40	38.56	54.00	15.44	PASS	Horizontal	AV

EUT_Name		Test_Model	
Test_Mode	BLE 2M GFSK Transmitting	Test_Frequency	2480MHz
Tset_Engineer	Aiden.wang	Test_Date	2024/12/20
Remark			

Test Graph

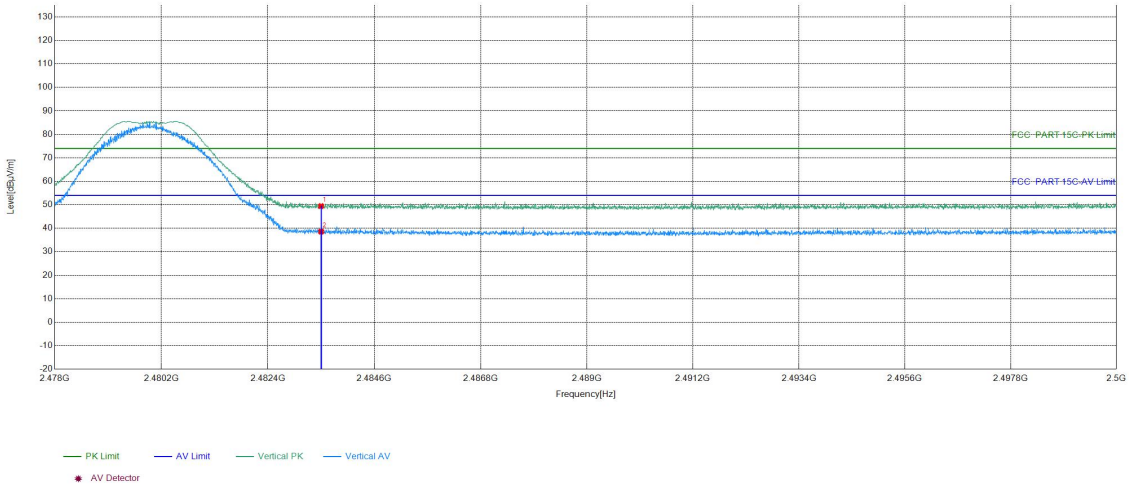

Suspected List									
NO	Freq. [MHz]	Factor [dB]	Reading [dBµV]	Level [dBµV/m]	Limit [dBµV/m]	Margin [dB]	Result	Polarity	Remark
1	2483.5	15.16	34.29	49.45	74.00	24.55	PASS	Vertical	PK
2	2483.5	15.16	23.42	38.58	54.00	15.42	PASS	Vertical	AV

Note:
The field strength is calculated by adding the Antenna Factor, Cable Factor & Preamplifier. The basic equation with a sample calculation is as follows:
Final Test Level =Receiver Reading -Correct Factor
Correct Factor = Preamplifier Factor– Antenna Factor–Cable Factor

7 Appendix A

Refer to Appendix: Bluetooth LE of EED32Q82023101

Statement

1. This report is considered invalid without approved signature, special seal and the seal on the perforation;

2. The Company Name shown on Report and Address, the sample(s) and sample information was/were provided by the applicant who should be responsible for the authenticity which CTI hasn't verified;

3. The result(s) shown in this report refer(s) only to the sample(s) tested;

4. Unless otherwise stated,the decision rule for conformity reporting is based on Binary Statement for Simple Acceptance Rule stated in ILAC-G8:09/2019/CNAS-GL015:2022;

5. Without written approval of CTI, this report can't be reproduced except in full;

*** End of Report ***