# TEST REPORT

| | | |
|---|---|---|
| **Product** | : | Grid Pad 16 |
| **Trade mark** | : | Smartbox |
| **Model/Type reference** | : | GP16A |
| **Serial Number** | : | N/A |
| **Report Number** | : | EED32Q82023102 |
| **FCC ID** | : | 2APXM-GP16A |
| **Date of Issue** | : | Mar. 20, 2025 |
| **Test Standards** | : | 47 CFR Part 15 Subpart C |
| **Test result** | : | PASS |

Prepared for:

**Smartbox Assistive Technology Limited**
**Ysobel House, Enigma Commercial Centre, Sandys Road, Malvern, Worcestershire, UK WR14 1JJ**

Prepared by:

**Centre Testing International Group Co., Ltd.**
**Hongwei Industrial Zone, Bao'an 70 District, Shenzhen, Guangdong, China**
**TEL: +86-755-3368 3668**
**FAX: +86-755-3368 3385**

| | | | |
|---|---|---|---|
| Compiled by: | Keven Tan | Reviewed by: | Frazer Li |
| | Keven Tan | | Frazer Li |
| Approved by: | Aaron Ma | Date: | Mar. 20, 2025 |
| | Aaron Ma | | |

Check No.: 7259051224

# 1 Contents

Page

**1 CONTENTS** ..... 2
**2 VERSION** ..... 3
**3 TEST SUMMARY** ..... 4
**4 GENERAL INFORMATION** ..... 5
4.1 CLIENT INFORMATION ..... 5
4.2 GENERAL DESCRIPTION OF EUT ..... 5
4.3 TEST CONFIGURATION ..... 7
4.4 TEST ENVIRONMENT ..... 8
4.5 DESCRIPTION OF SUPPORT UNITS ..... 8
**5 TEST RESULTS AND MEASUREMENT DATA** ..... 13
5.1 ANTENNA REQUIREMENT ..... 13
5.2 AC POWER LINE CONDUCTED EMISSIONS ..... 14
5.3 MAXIMUM CONDUCTED OUTPUT POWER ..... 18
5.4 20DB EMISSION BANDWIDTH ..... 19
5.5 CARRIER FREQUENCY SEPARATION ..... 20
5.6 NUMBER OF HOPPING CHANNEL ..... 21
5.7 TIME OF OCCUPANCY ..... 22
5.8 BAND EDGE MEASUREMENTS ..... 23
5.9 CONDUCTED SPURIOUS EMISSIONS ..... 24
5.10 PSEUDORANDOM FREQUENCY HOPPING SEQUENCE ..... 25
5.11 RADIATED SPURIOUS EMISSION & RESTRICTED BANDS ..... 27
**6 APPENDIX A** ..... 49
**7 PHOTOGRAPHS OF TEST SETUP** ..... 50
**8 PHOTOGRAPHS OF EUT CONSTRUCTIONAL DETAILS** ..... 52

## 2 Version

| Version No. | Date | Description |
|---|---|---|
| 00 | Mar. 20, 2025 | Original |
| | | |
| | | |

# 3 Test Summary

| Test Item | Test Requirement | Result |
|---|---|---|
| **Antenna Requirement** | 47 CFR Part 15, Subpart C Section 15.203/15.247 (c) | PASS |
| **AC Power Line Conducted Emission** | 47 CFR Part 15, Subpart C Section 15.207 | PASS |
| **Maximum Conducted Output Power** | 47 CFR Part 15, Subpart C Section 15.247 (b)(1) | PASS |
| **20dB Emission Bandwidth** | 47 CFR Part 15, Subpart C Section 15.247 (a)(1) | PASS |
| **Carrier Frequency Separation** | 47 CFR Part 15, Subpart C Section 15.247 (a)(1) | PASS |
| **Number of Hopping Channels** | 47 CFR Part 15, Subpart C Section 15.247 (a)(1) | PASS |
| **Time of Occupancy** | 47 CFR Part 15, Subpart C Section 15.247 (a)(1) | PASS |
| **Pseudorandom Frequency Hopping Sequence** | 47 CFR Part 15, Subpart C Section 15.247(b)(4) | PASS |
| **Band Edge Measurements** | 47 CFR Part 15, Subpart C Section 15.247(d) | PASS |
| **Conducted Spurious Emissions** | 47 CFR Part 15, Subpart C Section 15.247(d) | PASS |
| **Radiated Spurious emissions** | 47 CFR Part 15, Subpart C Section 15.205/15.209 | PASS |
| **Restricted bands around fundamental frequency** | 47 CFR Part 15, Subpart C Section 15.205/15.209 | PASS |

# 4 General Information

## 4.1 Client Information

| | |
|---|---|
| Applicant: | Smartbox Assistive Technology Limited |
| Address of Applicant: | Ysobel House, Enigma Commercial Centre, Sandys Road, Malvern, Worcestershire, UK WR14 1JJ |
| Manufacturer: | Smartbox Assistive Technology Limited |
| Address of Manufacturer: | Ysobel House, Enigma Commercial Centre, Sandys Road, Malvern, Worcestershire, UK WR14 1JJ |
| Factory: | Estone Technology LTD |
| Address of Factory: | 2F, Building No.1, Jia'an Industrial Park, No.2 Long Chang Road, Bao'an, Shenzhen 518101, China. |

## 4.2 General Description of EUT

| | | |
|---|---|---|
| Product Name: | Grid Pad 16 | |
| Model No.: | GP16A | |
| Trade Mark: | Smartbox | |
| Product Type: | ☐ Mobile ☒ Portable ☐ Fixed Location | |
| Operation Frequency: | 2402MHz-2480MHz | |
| Modulation Technique: | Frequency Hopping Spread Spectrum(FHSS) | |
| Modulation Type: | GFSK, π/4DQPSK, 8DPSK | |
| Number of Channel: | 79 | |
| Hopping Channel Type: | Adaptive Frequency Hopping systems | |
| Antenna Type: | PCB Antenna | |
| Antenna Gain: | 0.42dBi | |
| Power Supply: | Adapter: | MODEL: MANGO60S-19AB-ES<br>INPUT:100-240V~50/60Hz,1.5A MAX<br>OUTPUT:19V,3.15A,60W MAX |
| | Rechargeable Li-ion Battery 1: | Model:875583-3S<br>Nominal Voltage:11.4V<br>Rated Capacity:5820mAh/66.348Wh<br>Charging Limited Voltage:13.05V |
| | Rechargeable Li-ion Battery 2: | Model:875583-3S<br>Nominal Voltage:11.4V<br>Rated Capacity:5820mAh/66.348Wh<br>Charging Limited Voltage:13.05V |
| Test Voltage: | DC 11.4V | |
| Sample Received Date: | Dec. 17, 2024 | |
| Sample tested Date: | Dec. 17, 2024 to Jan. 08, 2025 | |

| Operation Frequency each of channel | | | | | | | |
|---|---|---|---|---|---|---|---|
| Channel | Frequency (MHz) | Channel | Frequency (MHz) | Channel | Frequency (MHz) | Channel | Frequency (MHz) |
| 0 | 2402 | 20 | 2422 | 40 | 2442 | 60 | 2462 |
| 1 | 2403 | 21 | 2423 | 41 | 2443 | 61 | 2463 |
| 2 | 2404 | 22 | 2424 | 42 | 2444 | 62 | 2464 |
| 3 | 2405 | 23 | 2425 | 43 | 2445 | 63 | 2465 |
| 4 | 2406 | 24 | 2426 | 44 | 2446 | 64 | 2466 |
| 5 | 2407 | 25 | 2427 | 45 | 2447 | 65 | 2467 |
| 6 | 2408 | 26 | 2428 | 46 | 2448 | 66 | 2468 |
| 7 | 2409 | 27 | 2429 | 47 | 2449 | 67 | 2469 |
| 8 | 2410 | 28 | 2430 | 48 | 2450 | 68 | 2470 |
| 9 | 2411 | 29 | 2431 | 49 | 2451 | 69 | 2471 |
| 10 | 2412 | 30 | 2432 | 50 | 2452 | 70 | 2472 |
| 11 | 2413 | 31 | 2433 | 51 | 2453 | 71 | 2473 |
| 12 | 2414 | 32 | 2434 | 52 | 2454 | 72 | 2474 |
| 13 | 2415 | 33 | 2435 | 53 | 2455 | 73 | 2475 |
| 14 | 2416 | 34 | 2436 | 54 | 2456 | 74 | 2476 |
| 15 | 2417 | 35 | 2437 | 55 | 2457 | 75 | 2477 |
| 16 | 2418 | 36 | 2438 | 56 | 2458 | 76 | 2478 |
| 17 | 2419 | 37 | 2439 | 57 | 2459 | 77 | 2479 |
| 18 | 2420 | 38 | 2440 | 58 | 2460 | 78 | 2480 |
| 19 | 2421 | 39 | 2441 | 59 | 2461 | | |

Note:
In section 15.31(m), regards to the operating frequency range over 10 MHz, the Lowest frequency, the middle frequency, and the highest frequency of channel were selected to perform the test, and the selected channel see below:

| Channel | Frequency(MHz) |
|---|---|
| The lowest channel (CH0) | 2402 |
| The middle channel (CH39) | 2441 |
| The highest channel (CH78) | 2480 |

## 4.3 Test Configuration

| EUT Test Software Settings: | | |
|---|---|---|
| Test Software: | N/A | |
| EUT Power Grade: | Default (Power level is built-in set parameters and cannot be changed and selected) | |
| Use test software to set the lowest frequency, the middle frequency and the highest frequency keep transmitting of the EUT. | | |
| Mode | Channel | Frequency(MHz) |
| DH1/DH3/DH5 | CH0 | 2402 |
| | CH39 | 2441 |
| | CH78 | 2480 |
| 2DH1/2DH3/2DH5 | CH0 | 2402 |
| | CH39 | 2441 |
| | CH78 | 2480 |
| 3DH1/3DH3/3DH5 | CH0 | 2402 |
| | CH39 | 2441 |
| | CH78 | 2480 |

## 4.4 Test Environment

| Operating Environment: | |
|---|---|
| **Radiated Spurious Emissions:** | |
| Temperature: | 22~25.0 °C |
| Humidity: | 50~55 % RH |
| Atmospheric Pressure: | 1010mbar |
| **Conducted Emissions:** | |
| Temperature: | 22~25.0 °C |
| Humidity: | 50~55 % RH |
| Atmospheric Pressure: | 1010mbar |
| **RF Conducted:** | |
| Temperature: | 22~25.0 °C |
| Humidity: | 50~55 % RH |
| Atmospheric Pressure: | 1010mbar |

## 4.5 Description of Support Units

The EUT has been tested with associated equipment below.

1）Support equipment

| Description | Manufacturer | Model No. | Certification | Supplied by |
|---|---|---|---|---|
| / | / | / | / | / |

## 4.6 Test Location

All tests were performed at:

Centre Testing International Group Co., Ltd
Building C, Hongwei Industrial Park Block 70, Bao'an District, Shenzhen, China
Telephone: +86 (0) 755 33683668 Fax:+86 (0) 755 33683385
No tests were sub-contracted.
FCC Designation No.: CN1164

## 4.7 Measurement Uncertainty (95% confidence levels, k=2)

| No. | Item | Measurement Uncertainty |
|---|---|---|
| 1 | Radio Frequency | $7.9 \times 10^{-8}$ |
| 2 | RF power, conducted | 0.46dB (30MHz-1GHz) |
| | | 0.55dB (1GHz-40GHz) |
| 3 | Radiated Spurious emission test | 3.3dB (9kHz-30MHz) |
| | | 4.3dB (30MHz-1GHz) |
| | | 4.5dB (1GHz-18GHz) |
| | | 3.4dB (18GHz-40GHz) |
| 4 | Conduction emission | 3.5dB (9kHz-150kHz) |
| | | 3.1dB (150kHz-30MHz) |
| 5 | Temperature test | 0.64°C |
| 6 | Humidity test | 3.8% |
| 7 | DC power voltages | 0.026% |

## 4.8 Equipment List

| RF test system | | | | | |
|---|---|---|---|---|---|
| **Equipment** | **Manufacturer** | **Model No.** | **Serial Number** | **Cal. Date (mm-dd-yyyy)** | **Cal. Due date (mm-dd-yyyy)** |
| Spectrum Analyzer | Keysight | N9010A | MY54510339 | 12-05-2024 | 12-104-2025 |
| Signal Generator | Keysight | N5182B | MY53051549 | 11-30-2024 | 11-29-2025 |
| DC Power | Keysight | E3642A | MY56376072 | 11-30-2024 | 11-29-2025 |
| Communication test set | R&S | CMW500 | 169004 | 03-08-2024 | 03-07-2025 |
| RF control unit(power unit) | JS Tonscend | JS0806-2 | 22G8060592 | 07-22-2024 | 07-21-2025 |
| Wi-Fi 7GHz Band Extendder | JS Tonscend | TS-WF7U2 | 2206200002 | 05-31-2024 | 05-30-2025 |
| High-low temperature test chamber | Dong Guang Qin Zhuo | LK-80GA | QZ20150611879 | 11-30-2024 | 11-29-2025 |
| Temperature/ Humidity Indicator | biaozhi | HM10 | 1804186 | 05-29-2024 | 05-28-2025 |
| BT&WI-FI Automatic test software | JS Tonscend | JS1120-3 | V3.3.20 | --- | --- |
| Spectrum Analyzer | R&S | FSV3044 | 101509 | 01-17-2024<br>02-14-2025 | 01-16-2025<br>02-13-2026 |

| Conducted disturbance Test | | | | | |
|---|---|---|---|---|---|
| **Equipment** | **Manufacturer** | **Model No.** | **Serial Number** | **Cal. date (mm-dd-yyyy)** | **Cal. Due date (mm-dd-yyyy)** |
| Receiver | R&S | ESCI | 100435 | 04-18-2024 | 04-17-2025 |
| Temperature/ Humidity Indicator | Defu | TH128 | / | 04-25-2024 | 04-24-2025 |
| LISN | R&S | ENV216 | 100098 | 09-19-2024 | 09-18-2025 |
| Barometer | changchun | DYM3 | 1188 | --- | --- |
| Test software | Fara | EZ-EMC | EMC-CON 3A1.1 | --- | --- |

| | | | | | |
|---|---|---|---|---|---|
| Capacitive voltage probe | Schwarzbeck | CVP 9222C | 00124 | 06-18-2024 | 06-17-2025 |
| ISN | TESEQ | ISN T800 | 30297 | 12-05-2024 | 12-04-2025 |

| 3M Semi-anechoic Chamber (2)- Radiated disturbance Test | | | | | |
|---|---|---|---|---|---|
| **Equipment** | **Manufacturer** | **Model No.** | **Serial Number** | **Cal. date (mm-dd-yyyy)** | **Cal. Due date (mm-dd-yyyy)** |
| 3M Chamber & Accessory Equipment | TDK | SAC-3 | --- | 05/22/2022 | 05/21/2025 |
| Receiver | R&S | ESCI7 | 100938-003 | 09/07/2024 | 09/06/2025 |
| Spectrum Analyzer | R&S | FSV40 | 101200 | 07/18/2024 | 07/17/2025 |
| TRILOG Broadband Antenna | schwarzbeck | VULB 9163 | 9163-618 | 05/22/2022 | 05/21/2025 |
| Loop Antenna | Schwarzbeck | FMZB 1519B | 1519B-076 | 04/16/2024 | 04/15/2025 |
| Microwave Preamplifier | Tonscend | EMC051845SE | 980380 | 12/05/2024 | 12/04/2025 |
| Horn Antenna | A.H.SYSTEMS | SAS-574 | 374 | 07/02/2023 | 07/01/2026 |
| Horn Antenna | ETS-LINGREN | BBHA 9120D | 9120D-1869 | 04/16/2024 | 04/15/2025 |
| Preamplifier | Agilent | 11909A | 12-1 | 03/22/2024 | 03/21/2025 |
| Preamplifier | CD | PAP-1840-60 | 6041.6042 | 06/19/2024 | 06/18/2025 |
| Test software | Fara | EZ-EMC | EMEC-3A1-Pre | --- | --- |
| Cable line | Fulai(7M) | SF106 | 5219/6A | 05/22/2022 | 05/21/2025 |
| Cable line | Fulai(6M) | SF106 | 5220/6A | 05/22/2022 | 05/21/2025 |
| Cable line | Fulai(3M) | SF106 | 5216/6A | 05/22/2022 | 05/21/2025 |
| Cable line | Fulai(3M) | SF106 | 5217/6A | 05/22/2022 | 05/21/2025 |

| 3M full-anechoic Chamber | | | | | |
|---|---|---|---|---|---|
| **Equipment** | **Manufacturer** | **Model No.** | **Serial Number** | **Cal. Date (mm-dd-yyyy)** | **Cal. Due date (mm-dd-yyyy)** |
| Fully Anechoic Chamber | TDK | FAC-3 | --- | 01-09-2024 | 01-08-2027 |
| Receiver | Keysight | N9038A | MY57290136 | 01-09-2024<br>01-04-2025 | 01-08-2025<br>01-03-2026 |
| Spectrum Analyzer | Keysight | N9020B | MY57111112 | 01-29-2024<br>01-14-2025 | 01-28-2025<br>01-13-2026 |
| Spectrum Analyzer | Keysight | N9030B | MY57140871 | 01-23-2024<br>01-14-2025 | 01-22-2025<br>01-13-2026 |
| TRILOG Broadband Antenna | Schwarzbeck | VULB 9163 | 9163-1148 | 04-28-2024 | 04-27-2025 |
| Horn Antenna | Schwarzbeck | BBHA 9170 | 9170-832 | 04-16-2024 | 04-15-2025 |
| Horn Antenna | ETS-LINDGREN | 3117 | 57407 | 07-03-2024 | 07-02-2025 |
| Preamplifier | EMCI | EMC001330 | 980563 | 03-08-2024 | 03-07-2025 |
| Preamplifier | Tonscend | TAP-011858 | AP21B806112 | 07-18-2024 | 07-17-2025 |
| Preamplifier | Tonscend | EMC051845SE | 980380 | 12-05-2024 | 12-04-2025 |
| Temperature/ Humidity Indicator | biaozhi | GM1360 | EE1186631 | 04-07-2024 | 04-06-2025 |
| RSE Automatic test software | JS Tonscend | JS36-RSE | V4.0.0.0 | --- | --- |
| Cable line | Times | SFT205-NMSM-2.50M | 394812-0001 | 01-09-2024 | 01-08-2027 |
| Cable line | Times | SFT205-NMSM-2.50M | 394812-0002 | 01-09-2024 | 01-08-2027 |
| Cable line | Times | SFT205-NMSM-2.50M | 394812-0003 | 01-09-2024 | 01-08-2027 |
| Cable line | Times | SFT205-NMSM-2.50M | 393495-0001 | 01-09-2024 | 01-08-2027 |
| Cable line | Times | EMC104-NMNM-1000 | SN160710 | 01-09-2024 | 01-08-2027 |
| Cable line | Times | SFT205-NMSM-3.00M | 394813-0001 | 01-09-2024 | 01-08-2027 |
| Cable line | Times | SFT205-NMNM-1.50M | 381964-0001 | 01-09-2024 | 01-08-2027 |
| Cable line | Times | SFT205-NMSM-7.00M | 394815-0001 | 01-09-2024 | 01-08-2027 |
| Cable line | Times | HF160-KMKM-3.00M | 393493-0001 | 01-09-2024 | 01-08-2027 |

# 5 Test results and Measurement Data

## 5.1 Antenna Requirement

| **Standard requirement:** | 47 CFR Part 15C Section 15.203 /247(c) |
|---|---|
| 15.203 requirement:<br>An intentional radiator shall be designed to ensure that no antenna other than that furnished by the responsible party shall be used with the device. The use of a permanently attached antenna or of an antenna that uses a unique coupling to the intentional radiator, the manufacturer may design the unit so that a broken antenna can be replaced by the user, but the use of a standard antenna jack or electrical connector is prohibited.<br>15.247(b) (4) requirement:<br>The conducted output power limit specified in paragraph (b) of this section is based on the use of antennas with directional gains that do not exceed 6 dBi. Except as shown in paragraph (c) of this section, if transmitting antennas of directional gain greater than 6 dBi are used, the conducted output power from the intentional radiator shall be reduced below the stated values in paragraphs (b)(1), (b)(2), and (b)(3) of this section, as appropriate, by the amount in dB that the directional gain of the antenna exceeds 6 dBi. | |
| **EUT Antenna:** | Please see Internal photos |
| The antenna is PCB antenna. The best case gain of the antenna is 0.42dBi. | |

## 5.2 AC Power Line Conducted Emissions

| | |
|---|---|
| Test Requirement: | 47 CFR Part 15C Section 15.207 |
| Test Method: | ANSI C63.10: 2013 |
| Test Frequency Range: | 150kHz to 30MHz |
| Receiver setup: | RBW=9 kHz, VBW=30 kHz, Sweep time=auto |
| Limit: | |

| Frequency range (MHz) | Limit (dBuV) | |
|---|---|---|
| | Quasi-peak | Average |
| 0.15-0.5 | 66 to 56* | 56 to 46* |
| 0.5-5 | 56 | 46 |
| 5-30 | 60 | 50 |

* Decreases with the logarithm of the frequency.

Test Setup:

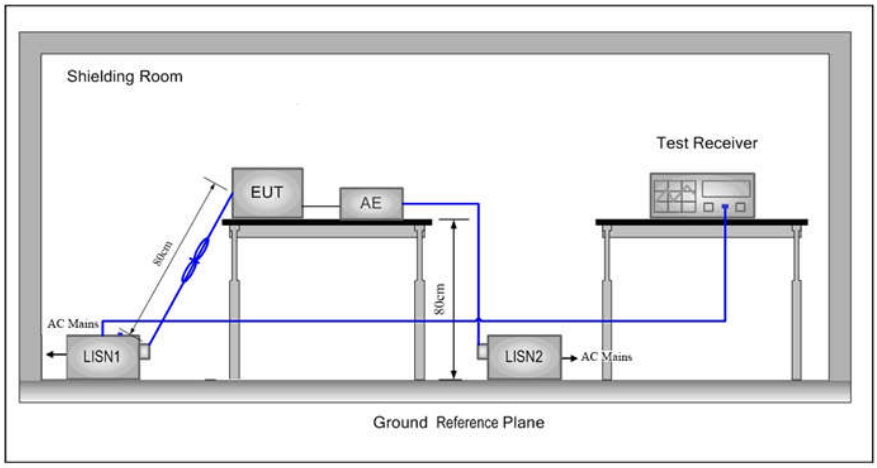


Test Procedure:

1) The mains terminal disturbance voltage test was conducted in a shielded room.
2) The EUT was connected to AC power source through a LISN 1 (Line Impedance Stabilization Network) which provides a 50Ω/50μH + 5Ω linear impedance. The power cables of all other units of the EUT were connected to a second LISN 2, which was bonded to the ground reference plane in the same way as the LISN 1 for the unit being measured. A multiple socket outlet strip was used to connect multiple power cables to a single LISN provided the rating of the LISN was not exceeded.
3) The tabletop EUT was placed upon a non-metallic table 0.8m above the ground reference plane. And for floor-standing arrangement, the EUT was placed on the horizontal ground reference plane,
4) The test was performed with a vertical ground reference plane. The rear of the EUT shall be 0.4 m from the vertical ground reference plane. The vertical ground reference plane was bonded to the horizontal ground reference plane. The LISN 1 was placed 0.8 m from the boundary of the unit under test and bonded to a ground reference plane for LISNs mounted on top of the ground reference plane. This distance was between the closest points of the LISN 1 and the EUT. All other units of the EUT and associated equipment was at least 0.8 m from the LISN 2.
5) In order to find the maximum emission, the relative positions of

| | |
|---|---|
| | equipment and all of the interface cables must be changed according to ANSI C63.10: 2013 on conducted measurement. |
| Exploratory Test Mode: | Non-hopping transmitting mode with all kind of modulation and all kind of data type at the lowest, middle, high channel. |
| Final Test Mode: | Through Pre-scan, find the DH5 of data type and GFSK modulation at the lowest channel is the worst case.<br>Only the worst case is recorded in the report. |
| Test Results: | Pass |

**Measurement Data**

Live line:

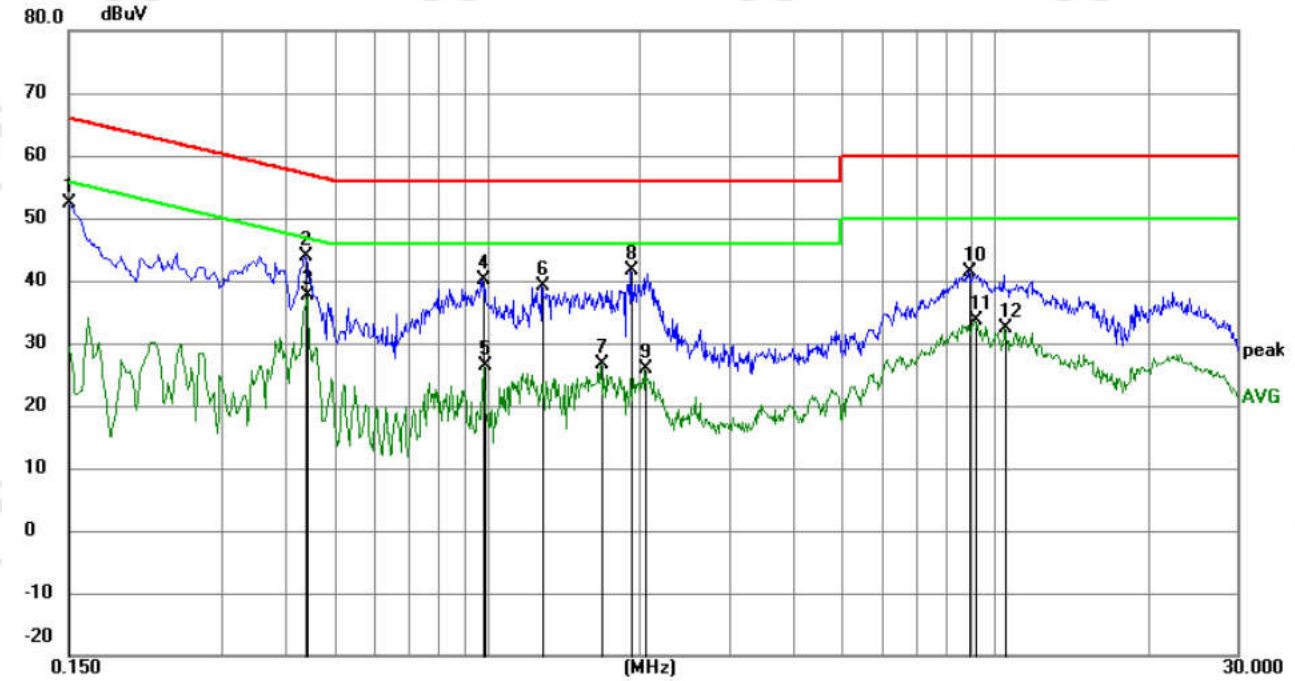


| No. | Mk. | Freq. | Reading Level | Correct Factor | Measure-ment | Limit | Margin | | |
|---|---|---|---|---|---|---|---|---|---|
| | | MHz | dBuV | dB | dBuV | dBuV | dB | Detector | Comment |
| 1 | | 0.1500 | 41.99 | 10.28 | 52.27 | 66.00 | -13.73 | QP | |
| 2 | | 0.4380 | 33.71 | 10.09 | 43.80 | 57.10 | -13.30 | QP | |
| 3 | * | 0.4425 | 27.47 | 10.09 | 37.56 | 47.01 | -9.45 | AVG | |
| 4 | | 0.9824 | 29.96 | 10.18 | 40.14 | 56.00 | -15.86 | QP | |
| 5 | | 0.9868 | 16.12 | 10.18 | 26.30 | 46.00 | -19.70 | AVG | |
| 6 | | 1.2882 | 28.98 | 10.18 | 39.16 | 56.00 | -16.84 | QP | |
| 7 | | 1.6754 | 16.48 | 10.17 | 26.65 | 46.00 | -19.35 | AVG | |
| 8 | | 1.9184 | 31.45 | 10.17 | 41.62 | 56.00 | -14.38 | QP | |
| 9 | | 2.0533 | 15.69 | 10.17 | 25.86 | 46.00 | -20.14 | AVG | |
| 10 | | 8.8887 | 31.32 | 9.98 | 41.30 | 60.00 | -18.70 | QP | |
| 11 | | 9.1182 | 23.65 | 9.97 | 33.62 | 50.00 | -16.38 | AVG | |
| 12 | | 10.5045 | 22.52 | 9.94 | 32.46 | 50.00 | -17.54 | AVG | |

Remark:

1. The following Quasi-Peak and Average measurements were performed on the EUT:
2. Final Test Level =Receiver Reading + LISN Factor + Cable Loss.
3. If the Peak value under Average limit, the Average value is not recorded in the report.

Neutral line:

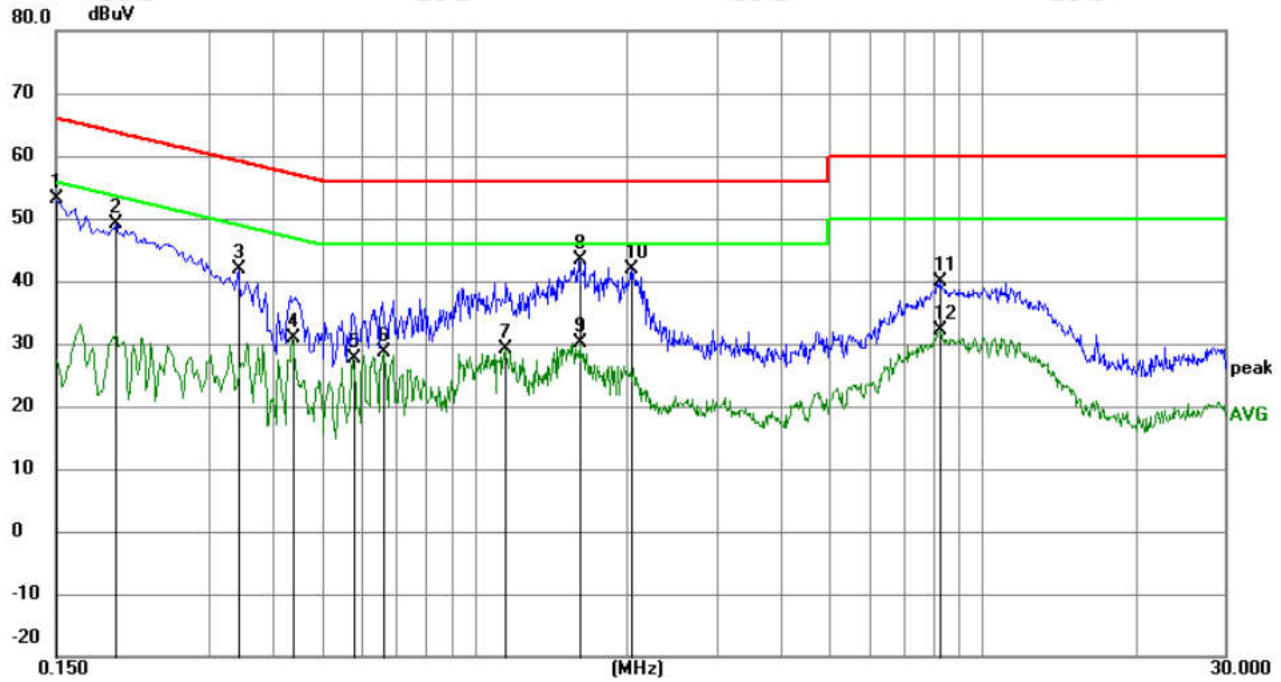


| No. | Mk. | Freq. | Reading Level | Correct Factor | Measure-ment | Limit | Margin | | |
|---|---|---|---|---|---|---|---|---|---|
| | | MHz | dBuV | dB | dBuV | dBuV | dB | Detector | Comment |
| 1 | | 0.1500 | 42.87 | 10.28 | 53.15 | 66.00 | -12.85 | QP | |
| 2 | | 0.1965 | 38.92 | 10.22 | 49.14 | 63.76 | -14.62 | QP | |
| 3 | | 0.3435 | 31.83 | 10.11 | 41.94 | 59.12 | -17.18 | QP | |
| 4 | | 0.4380 | 20.89 | 10.09 | 30.98 | 47.10 | -16.12 | AVG | |
| 5 | | 0.5774 | 17.60 | 10.10 | 27.70 | 46.00 | -18.30 | AVG | |
| 6 | | 0.6629 | 18.43 | 10.12 | 28.55 | 46.00 | -17.45 | AVG | |
| 7 | | 1.1489 | 18.99 | 10.18 | 29.17 | 46.00 | -16.83 | AVG | |
| 8 | * | 1.6079 | 33.13 | 10.17 | 43.30 | 56.00 | -12.70 | QP | |
| 9 | | 1.6169 | 19.98 | 10.17 | 30.15 | 46.00 | -15.85 | AVG | |
| 10 | | 2.0354 | 31.65 | 10.17 | 41.82 | 56.00 | -14.18 | QP | |
| 11 | | 8.2680 | 29.84 | 10.00 | 39.84 | 60.00 | -20.16 | QP | |
| 12 | | 8.2680 | 22.09 | 10.00 | 32.09 | 50.00 | -17.91 | AVG | |

Remark:

1. The following Quasi-Peak and Average measurements were performed on the EUT:
2. Final Test Level =Receiver Reading + LISN Factor + Cable Loss.
3. If the Peak value under Average limit, the Average value is not recorded in the report.

## 5.3 Maximum Conducted Output Power

| | |
|---|---|
| Test Requirement: | 47 CFR Part 15C Section 15.247 (b)(1) |
| Test Method: | ANSI C63.10:2013 |
| Test Setup: | 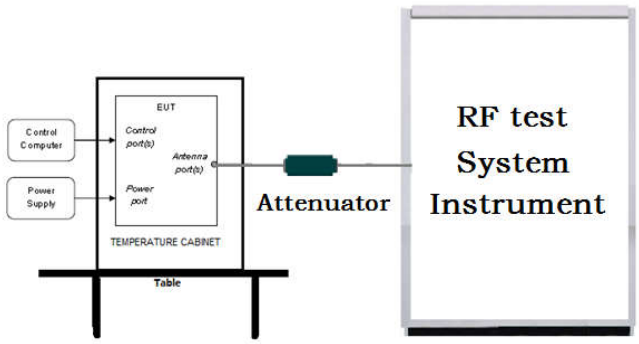 <br>Remark: Offset=Cable loss+ attenuation factor. |
| Test Procedure: | Use the following spectrum analyzer settings:<br>Span = approximately 5 times the 20 dB bandwidth, centered on a hopping channel<br>RBW > the 20 dB bandwidth of the emission being measured VBW ≥ RBW<br>Sweep = auto<br>Detector function = peak<br>Trace = max hold<br>Allow the trace to stabilize.<br>Use the marker-to-peak function to set the marker to the peak of the emission. |
| Limit: | 21dBm |
| Exploratory Test Mode: | Non-hopping transmitting with all kind of modulation and all kind of data type |
| Final Test Mode: | Through Pre-scan, find the DH5 of data type is the worst case of GFSK modulation type, 2-DH5 of data type is the worst case of π/4DQPSK modulation type, 3-DH5 of data type is the worst case of 8DPSK modulation type. |
| Test Results: | Refer to Appendix A |

## 5.4 20dB Emission Bandwidth

| | |
|---|---|
| Test Requirement: | 47 CFR Part 15C Section 15.247 (a)(1) |
| Test Method: | ANSI C63.10:2013 |
| Test Setup: | 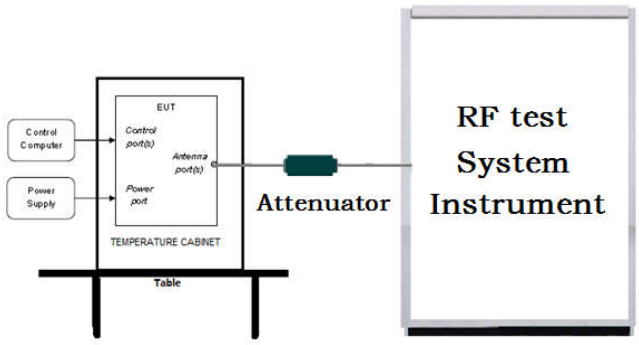 <br>Remark: Offset=Cable loss+ attenuation factor. |
| Test Procedure: | 1. The RF output of EUT was connected to the spectrum analyzer by RF cable and attenuator. The path loss was compensated to the results for each measurement.<br>2. Set to the maximum power setting and enable the EUT transmit continuously.<br>3. Use the following spectrum analyzer settings for 20dB Bandwidth measurement.<br>Span = approximately 2 to 5 times the 20 dB bandwidth, centered on a hopping channel; 1%≤RBW ≤5% of the 20 dB bandwidth; VBW≥3RBW; Sweep = auto; Detector function = peak; Trace = max hold.<br>4. Measure and record the results in the test report. |
| Limit: | NA |
| Exploratory Test Mode: | Non-hopping transmitting with all kind of modulation and all kind of data type |
| Final Test Mode: | Through Pre-scan, find the DH5 of data type is the worst case of GFSK modulation type, 2-DH5 of data type is the worst case of π/4DQPSK modulation type, 3-DH5 of data type is the worst case of 8DPSK modulation type. |
| Test Results: | Refer to Appendix A |

## 5.5 Carrier Frequency Separation

| | |
|---|---|
| Test Requirement: | 47 CFR Part 15C Section 15.247 (a)(1) |
| Test Method: | ANSI C63.10:2013 |
| Test Setup: | 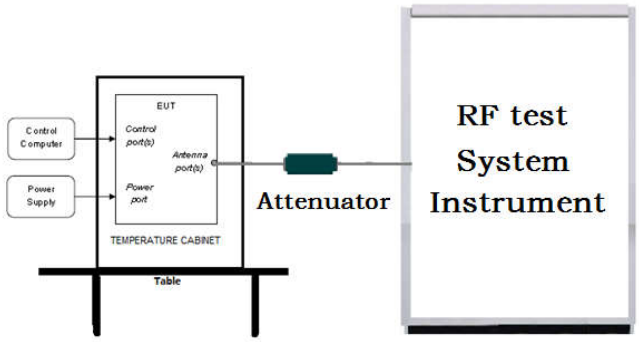 <br>Remark: Offset=Cable loss+ attenuation factor. |
| Test Procedure: | 1. The RF output of EUT was connected to the spectrum analyzer by RF cable and attenuator. The path loss was compensated to the results for each measurement.<br>2. Set to the maximum power setting and enable the EUT transmit continuously.<br>3. Enable the EUT hopping function.<br>4. Use the following spectrum analyzer settings:<br>Span = wide enough to capture the peaks of two adjacent channels; RBW is set to approximately 30% of the channel spacing, adjust as necessary to best identify the center of each individual channel;<br>VBW≥RBW; Sweep = auto;<br>Detector function = peak; Trace = max hold.<br>5. Use the marker-delta function to determine the separation between the peaks of the adjacent channels.<br>Record the value in report. |
| Limit: | Frequency hopping systems operating in the 2400-2483.5 MHz band may have hopping channel carrier frequencies that are separated by 25 kHz or two-thirds of the 20 dB bandwidth of the hopping channel, whichever is greater. |
| Exploratory Test Mode: | Hopping transmitting with all kind of modulation and all kind of data type |
| Final Test Mode: | Through Pre-scan, find the DH5 of data type is the worst case of GFSK modulation type, 2-DH5 of data type is the worst case of π/4DQPSK modulation type, 3-DH5 of data type is the worst case of 8DPSK modulation type. |
| Test Results: | Refer to Appendix A |

## 5.6 Number of Hopping Channel

| | |
|---|---|
| Test Requirement: | 47 CFR Part 15C Section 15.247 (a)(1) |
| Test Method: | ANSI C63.10:2013 |
| Test Setup: | 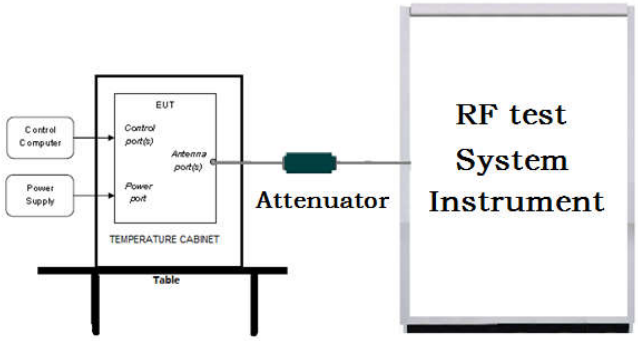 <br>Remark: Offset=Cable loss+ attenuation factor. |
| Test Procedure: | 1. The RF output of EUT was connected to the spectrum analyzer by RF cable and attenuator. The path loss was compensated to the results for each measurement.<br>2. Set to the maximum power setting and enable the EUT transmit continuously.<br>3. Enable the EUT hopping function.<br>4. Use the following spectrum analyzer settings: Span = the frequency band of operation; set the RBW to less than 30% of the channel spacing or the 20 dB bandwidth, whichever is smaller; VBW≥RBW; Sweep= auto; Detector function = peak; Trace = max hold.<br>5. The number of hopping frequency used is defined as the number of total channel.<br>6. Record the measurement data in report. |
| Limit: | Frequency hopping systems in the 2400-2483.5 MHz band shall use at least 15 channels. |
| Test Mode: | Hopping transmitting with all kind of modulation |
| Test Results: | Refer to Appendix A |

## 5.7 Time of Occupancy

| | |
|---|---|
| Test Requirement: | 47 CFR Part 15C Section 15.247 (a)(1) |
| Test Method: | ANSI C63.10:2013 |
| Test Setup: | 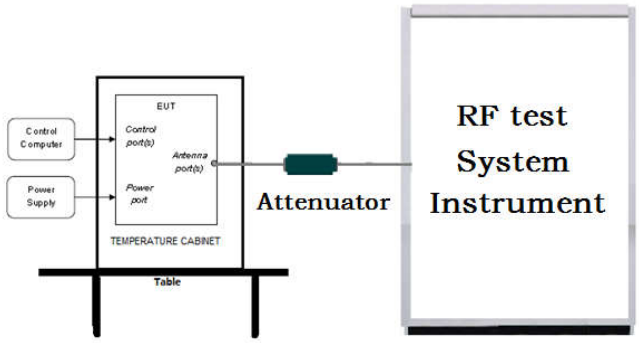 <br>Remark: Offset=Cable loss+ attenuation factor. |
| Test Procedure: | 1. The RF output of EUT was connected to the spectrum analyzer by RF cable and attenuator. The path loss was compensated to the results for each measurement.<br>2. Set to the maximum power setting and enable the EUT transmit continuously.<br>3. Enable the EUT hopping function.<br>4. Use the following spectrum analyzer settings: Span = zero span, centered on a hopping channel; RBW shall be ≤ channel spacing and where possible RBW should be set >> 1 / T, where T is the expected<br>dwell time per channel; VBW≥RBW; Sweep = as necessary to capture the entire dwell time per hopping channel; Detector function = peak; Trace = max hold.<br>5. Measure and record the results in the test report. |
| Limit: | The average time of occupancy on any channel shall not be greater than 0.4 seconds within a period of 0.4 seconds multiplied by the number of hopping channels employed. |
| Test Mode: | Hopping transmitting with all kind of modulation and all kind of data type. |
| Test Results: | Refer to Appendix A |

## 5.8 Band edge Measurements

| | |
|---|---|
| Test Requirement: | 47 CFR Part 15C Section 15.247 (d) |
| Test Method: | ANSI C63.10:2013 |
| Test Setup: | 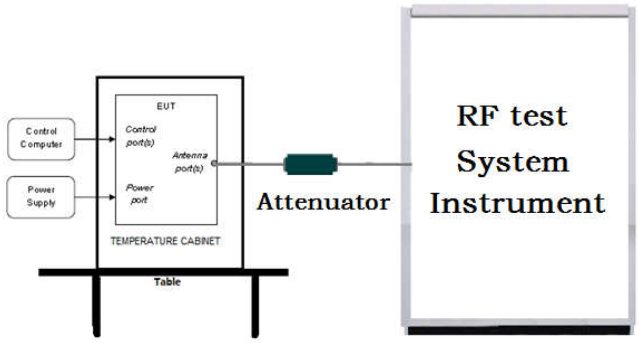 <br>Remark: Offset=Cable loss+ attenuation factor. |
| Test Procedure: | 1. Set to the maximum power setting and enable the EUT transmit continuously.<br>2. Set RBW = 100 kHz, VBW = 300 kHz (≥RBW). Band edge emissions must be at least 20 dB down from the highest emission level within<br>the authorized band as measured with a 100kHz RBW. The attenuation shall be 30 dB instead of 20 dB when RMS conducted output power procedure is used.<br>3. Enable hopping function of the EUT and then repeat step 2 and 3.<br>4. Measure and record the results in the test report. |
| Limit: | In any 100 kHz bandwidth outside the frequency band in which the spread spectrum intentional radiator is operating, the radio frequency power that is produced by the intentional radiator shall be at least 20 dB below that in the 100 kHz bandwidth within the band that contains the highest level of the desired power, based on either an RF conducted or a radiated measurement. |
| Exploratory Test Mode: | Hopping and Non-hopping transmitting with all kind of modulation and all kind of data type |
| Final Test Mode: | Through Pre-scan, find the DH5 of data type is the worst case of GFSK modulation type, 2-DH5 of data type is the worst case of π/4DQPSK modulation type, 3-DH5 of data type is the worst case of 8DPSK modulation type. |
| Test Results: | Refer to Appendix A |

## 5.9 Conducted Spurious Emissions

| | |
|---|---|
| Test Requirement: | 47 CFR Part 15C Section 15.247 (d) |
| Test Method: | ANSI C63.10:2013 |
| Test Setup: | 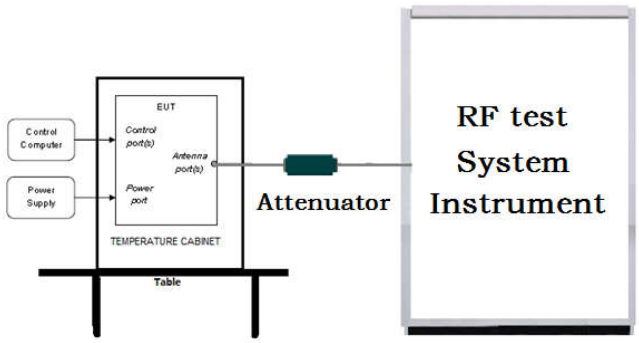 <br>Remark: Offset=Cable loss+ attenuation factor. |
| Test Procedure: | 1. The RF output of EUT was connected to the spectrum analyzer by RF cable and attenuator. The path loss was compensated to the results for each measurement.<br>2. Set to the maximum power setting and enable the EUT transmit continuously.<br>3. Set RBW = 100 kHz, VBW = 300kHz, scan up through 10th harmonic. All harmonics / spurs must be at least 20 dB down from the highest emission level within the authorized band as measured with a 100kHz RBW.<br>4. Measure and record the results in the test report.<br>5. The RF fundamental frequency should be excluded against the limit line in the operating frequency band. |
| Limit: | In any 100 kHz bandwidth outside the frequency band in which the spread spectrum intentional radiator is operating, the radio frequency power that is produced by the intentional radiator shall be at least 20 dB below that in the 100 kHz bandwidth within the band that contains the highest level of the desired power, based on either an RF conducted or a radiated measurement. |
| Exploratory Test Mode: | Non-hopping transmitting with all kind of modulation and all kind of data type |
| Final Test Mode: | Through Pre-scan, find the DH5 of data type is the worst case of GFSK modulation type, 2-DH5 of data type is the worst case of π/4DQPSK modulation type, 3-DH5 of data type is the worst case of 8DPSK modulation type. |
| Test Results: | Refer to Appendix A |

## 5.10 Pseudorandom Frequency Hopping Sequence

| Test Requirement: | 47 CFR Part 15C Section 15.247 (a)(1), (h) requirement: |
|---|---|

The system shall hop to channel frequencies that are selected at the system hopping rate from a Pseudorandom ordered list of hopping frequencies. Each frequency must be used equally on the average by each transmitter. The system receivers shall have input bandwidths that match the hopping channel bandwidths of their corresponding transmitters and shall shift frequencies in synchronization with the transmitted signals.

Frequency hopping spread spectrum systems are not required to employ all available hopping channels during each transmission. However, the system, consisting of both the transmitter and the receiver, must be designed to comply with all of the regulations in this section should the transmitter be presented with a continuous data (or information) stream. In addition, a system employing short transmission bursts must comply with the definition of a frequency hopping system and must distribute its transmissions over the minimum number of hopping channels specified in this section.

The incorporation of intelligence within a frequency hopping spread spectrum system that permits the system to recognize other users within the spectrum band so that it individually and independently chooses and adapts its hopsets to avoid hopping on occupied channels is permitted. The coordination of frequency hopping systems in any other manner for the express purpose of avoiding the simultaneous occupancy of individual hopping frequencies by multiple transmitters is not permitted.

**Compliance for section 15.247(a)(1)**

According to Bluetooth Core Specification, the pseudorandom sequence may be generated in a nine-stage shift register whose 5th and 9th stage
outputs are added in a modulo-two addition stage. And the result is fed back to the input of the first stage. The sequence begins with the first ONE of 9 consecutive ONEs; i.e. the shift register is initialized with nine ones.

- Number of shift register stages: 9
- Length of pseudo-random sequence: $2^9$ -1 = 511 bits
- Longest sequence of zeros: 8 (non-inverted signal)

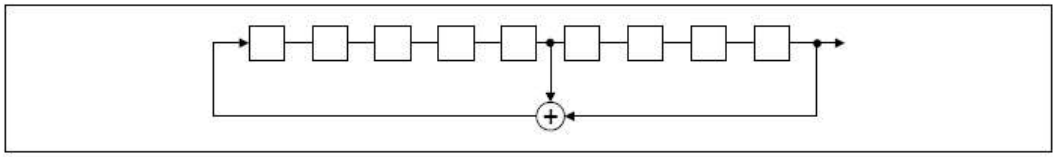

*Linear Feedback Shift Register for Generation of the PRBS sequence*

An example of Pseudorandom Frequency Hopping Sequence as follow:

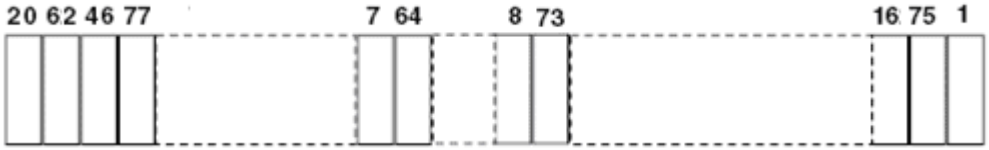


Each frequency used equally on the average by each transmitter.

According to Bluetooth Core Specification, Bluetooth receivers are designed to have input and IF bandwidths that match the hopping channel bandwidths of any Bluetooth transmitters and shift frequencies in synchronization with the transmitted signals.

**Compliance for section 15.247(g)**

According to Bluetooth Core Specification, the Bluetooth system transmits the packet with the pseudorandom hopping frequency with a continuous data and the short burst transmission from the Bluetooth system is also transmitted under the frequency hopping system with the pseudorandom

| |
|---|
| hopping frequency system. |
| **Compliance for section 15.247(h)** |
| According to Bluetooth Core specification, the Bluetooth system incorporates with an adaptive system to detect other user within the spectrum band so that it individually and independently to avoid hopping on the occupied channels.<br>According to the Bluetooth Core specification, the Bluetooth system is designed not have the ability to coordinated with other FHSS System in an effort to avoid the simultaneous occupancy of individual hopping frequencies by multiple transmitter. |

## 5.11 Radiated Spurious Emission & Restricted bands

| | |
|---|---|
| Test Requirement: | 47 CFR Part 15C Section 15.209 and 15.205 |
| Test Method: | ANSI C63.10: 2013 |
| Test Site: | Measurement Distance: 3m (Semi-Anechoic Chamber) |
| Receiver Setup: | |

| Frequency | Detector | RBW | VBW | Remark |
|---|---|---|---|---|
| 0.009MHz-0.090MHz | Peak | 10kHz | 30kHz | Peak |
| 0.009MHz-0.090MHz | Average | 10kHz | 30kHz | Average |
| 0.090MHz-0.110MHz | Quasi-peak | 10kHz | 30kHz | Quasi-peak |
| 0.110MHz-0.490MHz | Peak | 10kHz | 30kHz | Peak |
| 0.110MHz-0.490MHz | Average | 10kHz | 30kHz | Average |
| 0.490MHz -30MHz | Quasi-peak | 10kHz | 30kHz | Quasi-peak |
| 30MHz-1GHz | Peak | 100 kHz | 300kHz | Peak |
| Above 1GHz | Peak | 1MHz | 3MHz | Peak |
| | Peak | 1MHz | 10kHz | Average |

Limit:

| Frequency | Field strength (microvolt/meter) | Limit (dBuV/m) | Remark | Measurement distance (m) |
|---|---|---|---|---|
| 0.009MHz-0.490MHz | 2400/F(kHz) | - | - | 300 |
| 0.490MHz-1.705MHz | 24000/F(kHz) | - | - | 30 |
| 1.705MHz-30MHz | 30 | - | - | 30 |
| 30MHz-88MHz | 100 | 40.0 | Quasi-peak | 3 |
| 88MHz-216MHz | 150 | 43.5 | Quasi-peak | 3 |
| 216MHz-960MHz | 200 | 46.0 | Quasi-peak | 3 |
| 960MHz-1GHz | 500 | 54.0 | Quasi-peak | 3 |
| Above 1GHz | 500 | 54.0 | Average | 3 |

Note: 15.35(b), Unless otherwise specified, the limit on peak radio frequency emissions is 20dB above the maximum permitted average emission limit applicable to the equipment under test. This peak limit applies to the total peak emission level radiated by the device.

| Test Setup: | |
|---|---|

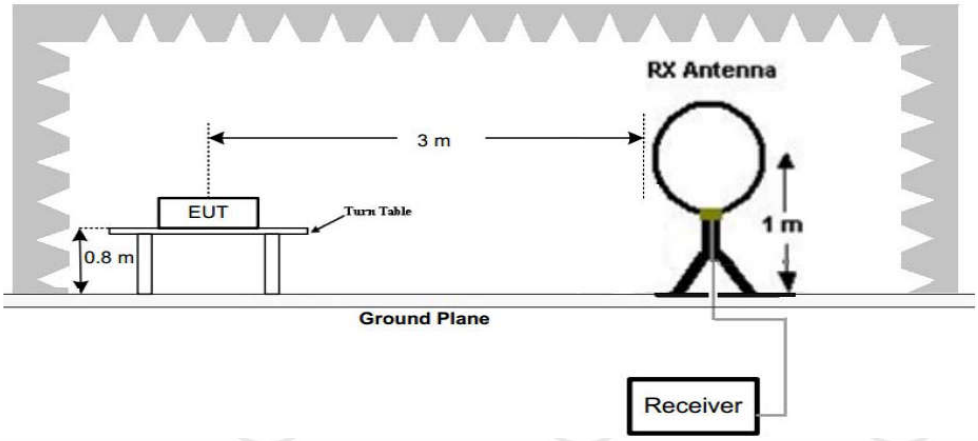


Figure 1. Below 30MHz

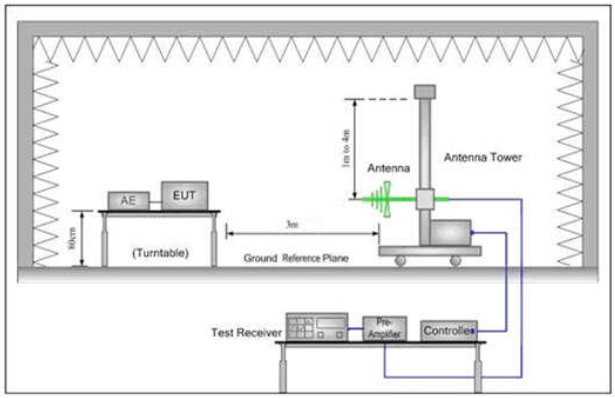


Figure 2. 30MHz to 1GHz

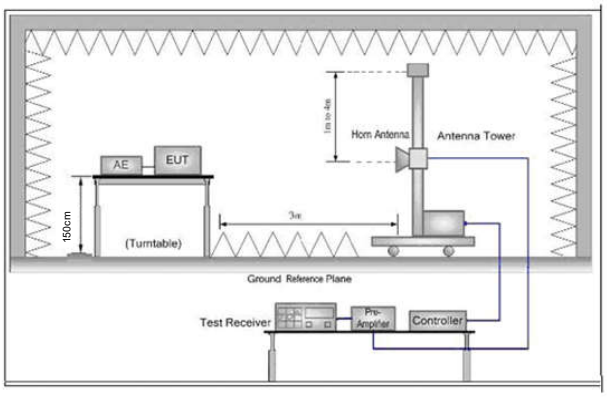


Figure 3. Above 1 GHz

| Test Procedure: | a. 1) Below 1G: The EUT was placed on the top of a rotating table 0.8 meters above the ground at a 3 meter semi-anechoic camber. The table was rotated 360 degrees to determine the position of the highest radiation.<br>2) Above 1G: The EUT was placed on the top of a rotating table 1.5 meters above the ground at a 3 meter semi-anechoic camber. The table was rotated 360 degrees to determine the position of the highest radiation.<br>Note: For the radiated emission test above 1GHz:<br>Place the measurement antenna away from each area of the EUT determined to be a source of emissions at the specified measurement distance, while keeping the measurement antenna aimed at the source of emissions at each frequency of significant emissions, with polarization oriented for maximum response. The measurement antenna may have to be higher or lower than the EUT, depending on the radiation pattern of the emission and staying aimed at the emission source for receiving the maximum signal. The final measurement antenna elevation shall be that which maximizes the emissions. The measurement antenna elevation for maximum emissions shall be restricted to a range of heights of from 1 m to 4 m above the ground or reference ground plane.<br>b. The EUT was set 3 meters away from the interference-receiving antenna, which was mounted on the top of a variable-height antenna tower.<br>c. The antenna height is varied from one meter to four meters above the ground to determine the maximum value of the field strength. Both horizontal and vertical polarizations of the antenna are set to make the |
|---|---|

| | |
|---|---|
| | measurement.<br>d. For each suspected emission, the EUT was arranged to its worst case and then the antenna was tuned to heights from 1 meter to 4 meters (for the test frequency of below 30MHz, the antenna was tuned to heights 1 meter) and the rotatable table was turned from 0 degrees to 360 degrees to find the maximum reading.<br>e. The test-receiver system was set to Peak Detect Function and Specified Bandwidth with Maximum Hold Mode.<br>f. If the emission level of the EUT in peak mode was 10dB lower than the limit specified, then testing could be stopped and the peak values of the EUT would be reported. Otherwise the emissions that did not have 10dB margin would be re-tested one by one using peak, quasi-peak or average method as specified and then reported in a data sheet.<br>g. Test the EUT in the lowest channel (2402MHz),the middle channel (2441MHz),the Highest channel (2480MHz)<br>h. The radiation measurements are performed in X, Y, Z axis positioning for Transmitting mode, and found the X axis positioning which it is the worst case.<br>i. Repeat above procedures until all frequencies measured was complete. |
| Exploratory Test Mode: | Non-hopping transmitting mode with all kind of modulation and all kind of data type |
| Final Test Mode: | Through Pre-scan, find the DH5 of data type and GFSK modulation is the worst case.<br>Pretest the EUT at Transmitting mode, For below 1GHz part, through pre-scan, the worst case is the lowest channel.<br>Only the worst case is recorded in the report. |
| Test Results: | Pass |

## Radiated Spurious Emission below 1GHz:

During the test, the Radiates Emission from 30MHz to 1GHz was performed in all modes, only the worst case lowest channel of DH5 for GFSK was recorded in the report.

Horizontal:

**Test Graph**

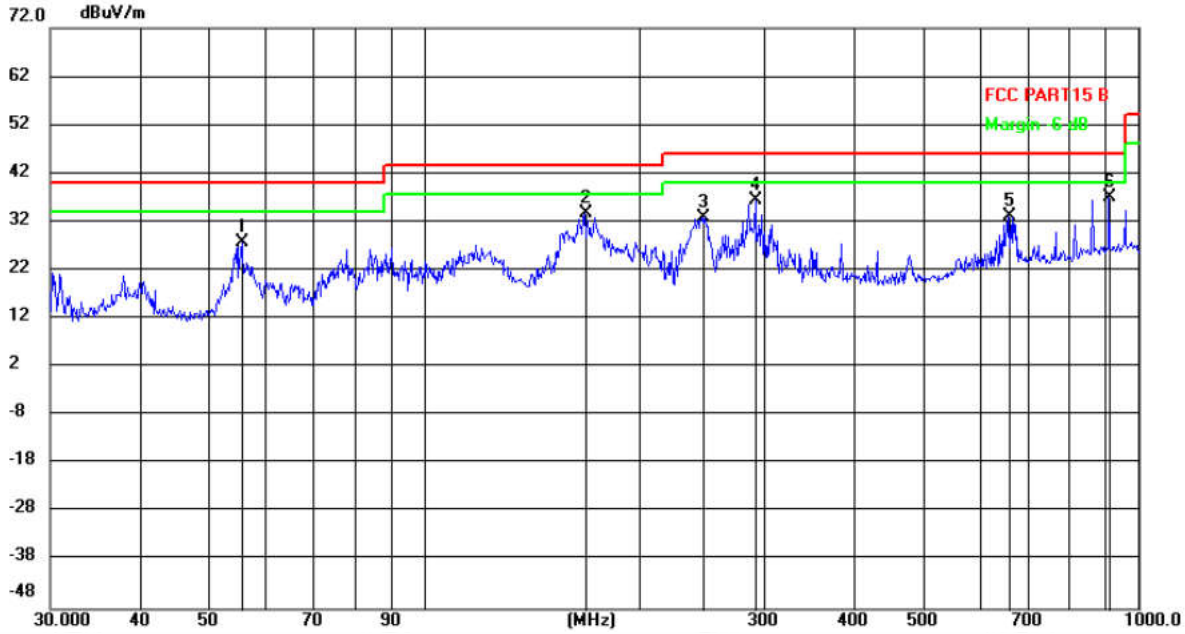


| No. | Mk. | Freq. | Reading Level | Correct Factor | Measure-ment | Limit | Margin | | Antenna Height | Table Degree | |
|---|---|---|---|---|---|---|---|---|---|---|---|
| | | MHz | dBuV | dB/m | dBuV/m | dBuV/m | dB | Detector | cm | degree | Comment |
| 1 | | 55.6874 | 14.60 | 13.20 | 27.80 | 40.00 | -12.20 | QP | 199 | 286 | |
| 2 | | 168.3252 | 22.60 | 11.04 | 33.64 | 43.50 | -9.86 | QP | 199 | 275 | |
| 3 | | 245.1759 | 18.85 | 14.08 | 32.93 | 46.00 | -13.07 | QP | 199 | 7 | |
| 4 | | 291.8535 | 20.70 | 15.84 | 36.54 | 46.00 | -9.46 | QP | 100 | 245 | |
| 5 | | 660.4553 | 10.48 | 22.71 | 33.19 | 46.00 | -12.81 | QP | 199 | 210 | |
| 6 | * | 912.0621 | 10.99 | 25.99 | 36.98 | 46.00 | -9.02 | QP | 100 | 85 | |

Vertical:

**Test Graph**

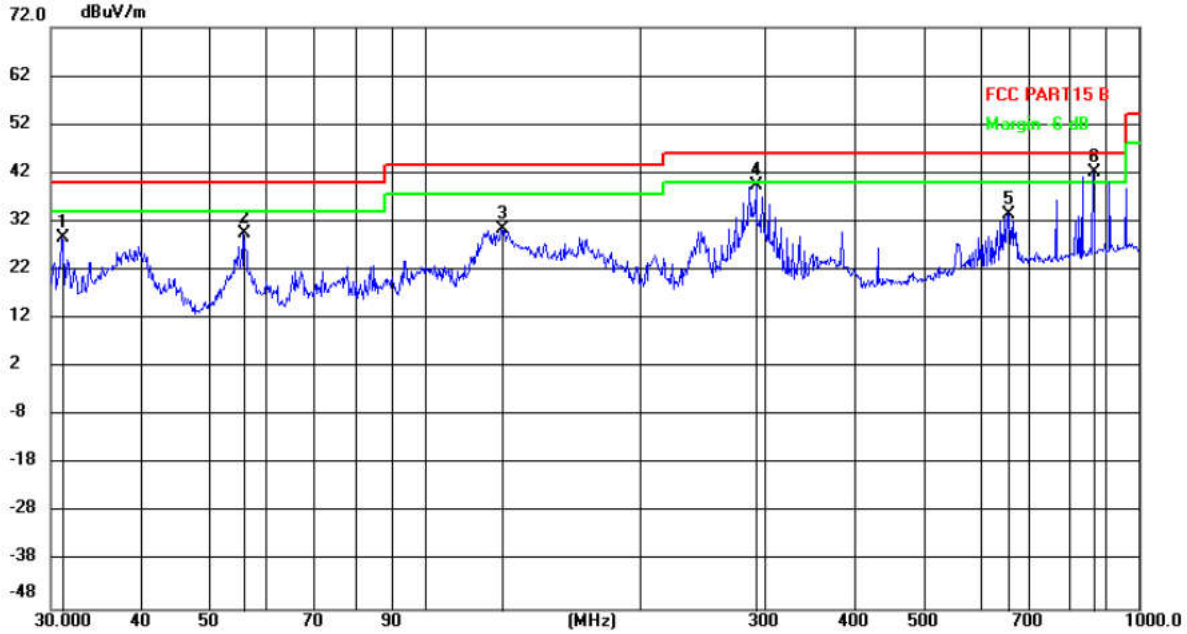


| No. | Mk. | Freq. | Reading Level | Correct Factor | Measure-ment | Limit | Margin | | Antenna Height | Table Degree | |
|---|---|---|---|---|---|---|---|---|---|---|---|
| | | MHz | dBuV | dB/m | dBuV/m | dBuV/m | dB | Detector | cm | degree | Comment |
| 1 | | 31.1142 | 16.27 | 12.39 | 28.66 | 40.00 | -11.34 | QP | 100 | 156 | |
| 2 | | 55.8536 | 16.44 | 13.19 | 29.63 | 40.00 | -10.37 | QP | 200 | 226 | |
| 3 | | 128.2027 | 20.18 | 10.22 | 30.40 | 43.50 | -13.10 | QP | 100 | 264 | |
| 4 | | 291.8536 | 23.62 | 15.84 | 39.46 | 46.00 | -6.54 | QP | 100 | 7 | |
| 5 | | 654.3464 | 10.81 | 22.66 | 33.47 | 46.00 | -12.53 | QP | 200 | 171 | |
| 6 | * | 864.1161 | 16.66 | 25.41 | 42.07 | 46.00 | -3.93 | QP | 100 | 7 | |

**Radiated Spurious Emission above 1GHz:**

| Mode: | | GFSK Transmitting | | | | Channel: | | 2402 MHz | |
|---|---|---|---|---|---|---|---|---|---|
| NO | Freq. [MHz] | Factor [dB] | Reading [dBμV] | Level [dBμV/m] | Limit [dBμV/m] | Margin [dB] | Result | Polarity | Remark |
| 1 | 1151.3434 | 10.36 | 38.04 | 48.40 | 74.00 | 25.60 | Pass | H | PK |
| 2 | 1950.0633 | 17.08 | 35.30 | 52.38 | 74.00 | 21.62 | Pass | H | PK |
| 3 | 3343.0229 | -12.66 | 53.20 | 40.54 | 74.00 | 33.46 | Pass | H | PK |
| 4 | 5061.1374 | -8.98 | 48.80 | 39.82 | 74.00 | 34.18 | Pass | H | PK |
| 5 | 11248.5499 | 5.83 | 43.91 | 49.74 | 74.00 | 24.26 | Pass | H | PK |
| 6 | 15896.8598 | 13.59 | 38.53 | 52.12 | 74.00 | 21.88 | Pass | H | PK |
| 7 | 1155.077 | 10.25 | 38.01 | 48.26 | 74.00 | 25.74 | Pass | V | PK |
| 8 | 1951.9301 | 16.97 | 35.09 | 52.06 | 74.00 | 21.94 | Pass | V | PK |
| 9 | 3338.0225 | -12.74 | 53.14 | 40.40 | 74.00 | 33.60 | Pass | V | PK |
| 10 | 5360.1573 | -8.30 | 48.60 | 40.30 | 74.00 | 33.70 | Pass | V | PK |
| 11 | 13136.6758 | 8.23 | 42.91 | 51.14 | 74.00 | 22.86 | Pass | V | PK |
| 12 | 16398.8933 | 13.04 | 38.82 | 51.86 | 74.00 | 22.14 | Pass | V | PK |

| Mode: | | GFSK Transmitting | | | | Channel: | | 2441 MHz | |
|---|---|---|---|---|---|---|---|---|---|
| NO | Freq. [MHz] | Factor [dB] | Reading [dBμV] | Level [dBμV/m] | Limit [dBμV/m] | Margin [dB] | Result | Polarity | Remark |
| 1 | 1069.8713 | 9.32 | 39.20 | 48.52 | 74.00 | 25.48 | Pass | H | PK |
| 2 | 1941.9295 | 16.82 | 34.88 | 51.70 | 74.00 | 22.30 | Pass | H | PK |
| 3 | 5377.1585 | -8.34 | 49.68 | 41.34 | 74.00 | 32.66 | Pass | H | PK |
| 4 | 9815.4544 | 3.19 | 44.06 | 47.25 | 74.00 | 26.75 | Pass | H | PK |
| 5 | 11991.5994 | 5.88 | 44.59 | 50.47 | 74.00 | 23.53 | Pass | H | PK |
| 6 | 15900.8601 | 13.64 | 37.44 | 51.08 | 74.00 | 22.92 | Pass | H | PK |
| 7 | 1155.3437 | 10.24 | 39.41 | 49.65 | 74.00 | 24.35 | Pass | V | PK |
| 8 | 2052.3368 | 15.46 | 36.39 | 51.85 | 74.00 | 22.15 | Pass | V | PK |
| 9 | 3803.0535 | -12.03 | 52.33 | 40.30 | 74.00 | 33.70 | Pass | V | PK |
| 10 | 7942.3295 | -1.72 | 44.77 | 43.05 | 74.00 | 30.95 | Pass | V | PK |
| 11 | 11961.5974 | 5.88 | 43.81 | 49.69 | 74.00 | 24.31 | Pass | V | PK |
| 12 | 15913.8609 | 12.66 | 39.38 | 52.04 | 74.00 | 21.96 | Pass | V | PK |

| Mode: | | GFSK Transmitting | | | | Channel: | | 2480 MHz | |
|---|---|---|---|---|---|---|---|---|---|
| NO | Freq. [MHz] | Factor [dB] | Reading [dBμV] | Level [dBμV/m] | Limit [dBμV/m] | Margin [dB] | Result | Polarity | Remark |
| 1 | 1153.6102 | 10.29 | 38.17 | 48.46 | 74.00 | 25.54 | Pass | H | PK |
| 2 | 1950.33 | 17.06 | 35.33 | 52.39 | 74.00 | 21.61 | Pass | H | PK |
| 3 | 4503.1002 | -8.52 | 50.43 | 41.91 | 74.00 | 32.09 | Pass | H | PK |
| 4 | 9792.4528 | 3.17 | 43.25 | 46.42 | 74.00 | 27.58 | Pass | H | PK |
| 5 | 11998.5999 | 5.89 | 44.33 | 50.22 | 74.00 | 23.78 | Pass | H | PK |
| 6 | 15880.8587 | 12.99 | 39.12 | 52.11 | 74.00 | 21.89 | Pass | H | PK |
| 7 | 1138.0092 | 10.02 | 38.08 | 48.10 | 74.00 | 25.90 | Pass | V | PK |
| 8 | 1989.3993 | 14.81 | 36.60 | 51.41 | 74.00 | 22.59 | Pass | V | PK |
| 9 | 5365.1577 | -8.31 | 48.49 | 40.18 | 74.00 | 33.82 | Pass | V | PK |
| 10 | 6801.2534 | -4.87 | 47.44 | 42.57 | 74.00 | 31.43 | Pass | V | PK |
| 11 | 11999.6 | 5.89 | 44.24 | 50.13 | 74.00 | 23.87 | Pass | V | PK |
| 12 | 15898.8599 | 13.67 | 37.70 | 51.37 | 74.00 | 22.63 | Pass | V | PK |

| Mode: | | π/4DQPSK Transmitting | | | | Channel: | | 2402 MHz | |
|---|---|---|---|---|---|---|---|---|---|
| NO | Freq. [MHz] | Factor [dB] | Reading [dBμV] | Level [dBμV/m] | Limit [dBμV/m] | Margin [dB] | Result | Polarity | Remark |
| 1 | 1127.7418 | 9.68 | 38.81 | 48.49 | 74.00 | 25.51 | Pass | H | PK |
| 2 | 1957.9305 | 16.62 | 35.20 | 51.82 | 74.00 | 22.18 | Pass | H | PK |
| 3 | 4294.0863 | -9.83 | 50.30 | 40.47 | 74.00 | 33.53 | Pass | H | PK |
| 4 | 7782.3188 | -3.46 | 46.56 | 43.10 | 74.00 | 30.90 | Pass | H | PK |
| 5 | 11000.5334 | 5.42 | 44.17 | 49.59 | 74.00 | 24.41 | Pass | H | PK |
| 6 | 16412.8942 | 12.89 | 39.13 | 52.02 | 74.00 | 21.98 | Pass | H | PK |
| 7 | 1643.6429 | 11.97 | 39.12 | 51.09 | 74.00 | 22.91 | Pass | V | PK |
| 8 | 1959.9307 | 16.51 | 36.09 | 52.60 | 74.00 | 21.40 | Pass | V | PK |
| 9 | 4682.1121 | -9.51 | 50.18 | 40.67 | 74.00 | 33.33 | Pass | V | PK |
| 10 | 6400.2267 | -5.29 | 47.78 | 42.49 | 74.00 | 31.51 | Pass | V | PK |
| 11 | 11937.5958 | 5.31 | 45.14 | 50.45 | 74.00 | 23.55 | Pass | V | PK |
| 12 | 16412.8942 | 12.89 | 39.41 | 52.30 | 74.00 | 21.70 | Pass | V | PK |

| Mode: | | π/4DQPSK Transmitting | | | | Channel: | | 2441 MHz | |
|---|---|---|---|---|---|---|---|---|---|
| NO | Freq. [MHz] | Factor [dB] | Reading [dBμV] | Level [dBμV/m] | Limit [dBμV/m] | Margin [dB] | Result | Polarity | Remark |
| 1 | 1407.6272 | 10.63 | 38.54 | 49.17 | 74.00 | 24.83 | Pass | H | PK |
| 2 | 1962.7308 | 16.34 | 35.91 | 52.25 | 74.00 | 21.75 | Pass | H | PK |
| 3 | 3343.0229 | -12.66 | 53.91 | 41.25 | 74.00 | 32.75 | Pass | H | PK |
| 4 | 5769.1846 | -7.34 | 48.52 | 41.18 | 74.00 | 32.82 | Pass | H | PK |
| 5 | 11951.5968 | 5.87 | 44.06 | 49.93 | 74.00 | 24.07 | Pass | H | PK |
| 6 | 15901.8601 | 13.56 | 38.64 | 52.20 | 74.00 | 21.80 | Pass | H | PK |
| 7 | 1015.201 | 9.32 | 39.12 | 48.44 | 74.00 | 25.56 | Pass | V | PK |
| 8 | 1972.7315 | 15.77 | 36.80 | 52.57 | 74.00 | 21.43 | Pass | V | PK |
| 9 | 4267.0845 | -10.38 | 51.11 | 40.73 | 74.00 | 33.27 | Pass | V | PK |
| 10 | 7953.3302 | -1.86 | 45.48 | 43.62 | 74.00 | 30.38 | Pass | V | PK |
| 11 | 11993.5996 | 5.88 | 43.99 | 49.87 | 74.00 | 24.13 | Pass | V | PK |
| 12 | 15887.8592 | 13.26 | 38.67 | 51.93 | 74.00 | 22.07 | Pass | V | PK |

| Mode: | | π/4DQPSK Transmitting | | | | Channel: | | 2480 MHz | |
|---|---|---|---|---|---|---|---|---|---|
| NO | Freq. [MHz] | Factor [dB] | Reading [dBμV] | Level [dBμV/m] | Limit [dBμV/m] | Margin [dB] | Result | Polarity | Remark |
| 1 | 1129.8753 | 9.75 | 37.97 | 47.72 | 74.00 | 26.28 | Pass | H | PK |
| 2 | 1950.73 | 17.03 | 34.81 | 51.84 | 74.00 | 22.16 | Pass | H | PK |
| 3 | 3325.0217 | -12.95 | 54.38 | 41.43 | 74.00 | 32.57 | Pass | H | PK |
| 4 | 7784.319 | -3.49 | 46.89 | 43.40 | 74.00 | 30.60 | Pass | H | PK |
| 5 | 11947.5965 | 5.76 | 44.76 | 50.52 | 74.00 | 23.48 | Pass | H | PK |
| 6 | 15878.8586 | 12.92 | 39.07 | 51.99 | 74.00 | 22.01 | Pass | H | PK |
| 7 | 1147.0765 | 10.32 | 38.73 | 49.05 | 74.00 | 24.95 | Pass | V | PK |
| 8 | 1953.7969 | 16.87 | 35.86 | 52.73 | 74.00 | 21.27 | Pass | V | PK |
| 9 | 4292.0861 | -9.87 | 51.62 | 41.75 | 74.00 | 32.25 | Pass | V | PK |
| 10 | 9277.4185 | 1.18 | 45.00 | 46.18 | 74.00 | 27.82 | Pass | V | PK |
| 11 | 11981.5988 | 5.89 | 44.28 | 50.17 | 74.00 | 23.83 | Pass | V | PK |
| 12 | 15895.8597 | 13.55 | 38.05 | 51.60 | 74.00 | 22.40 | Pass | V | PK |

| Mode: | | 8DPSK Transmitting | | | | Channel: | | 2402 MHz | |
|---|---|---|---|---|---|---|---|---|---|
| NO | Freq. [MHz] | Factor [dB] | Reading [dBμV] | Level [dBμV/m] | Limit [dBμV/m] | Margin [dB] | Result | Polarity | Remark |
| 1 | 1156.0104 | 10.22 | 38.50 | 48.72 | 74.00 | 25.28 | Pass | H | PK |
| 2 | 1944.1963 | 16.89 | 35.45 | 52.34 | 74.00 | 21.66 | Pass | H | PK |
| 3 | 4499.0999 | -8.49 | 50.62 | 42.13 | 74.00 | 31.87 | Pass | H | PK |
| 4 | 7744.3163 | -3.33 | 46.40 | 43.07 | 74.00 | 30.93 | Pass | H | PK |
| 5 | 11956.5971 | 5.88 | 44.45 | 50.33 | 74.00 | 23.67 | Pass | H | PK |
| 6 | 16424.895 | 12.65 | 39.76 | 52.41 | 74.00 | 21.59 | Pass | H | PK |
| 7 | 1146.0097 | 10.28 | 37.99 | 48.27 | 74.00 | 25.73 | Pass | V | PK |
| 8 | 1935.129 | 16.60 | 35.57 | 52.17 | 74.00 | 21.83 | Pass | V | PK |
| 9 | 3373.0249 | -12.97 | 53.75 | 40.78 | 74.00 | 33.22 | Pass | V | PK |
| 10 | 7332.2888 | -4.36 | 47.06 | 42.70 | 74.00 | 31.30 | Pass | V | PK |
| 11 | 11991.5994 | 5.88 | 44.40 | 50.28 | 74.00 | 23.72 | Pass | V | PK |
| 12 | 15898.8599 | 13.67 | 37.89 | 51.56 | 74.00 | 22.44 | Pass | V | PK |

| Mode: | | 8DPSK Transmitting | | | | Channel: | | 2441 MHz | |
|---|---|---|---|---|---|---|---|---|---|
| NO | Freq. [MHz] | Factor [dB] | Reading [dBμV] | Level [dBμV/m] | Limit [dBμV/m] | Margin [dB] | Result | Polarity | Remark |
| 1 | 1165.211 | 9.91 | 38.14 | 48.05 | 74.00 | 25.95 | Pass | H | PK |
| 2 | 1933.2622 | 16.54 | 35.72 | 52.26 | 74.00 | 21.74 | Pass | H | PK |
| 3 | 4300.0867 | -9.71 | 50.13 | 40.42 | 74.00 | 33.58 | Pass | H | PK |
| 4 | 9298.4199 | 1.49 | 44.25 | 45.74 | 74.00 | 28.26 | Pass | H | PK |
| 5 | 11996.5998 | 5.89 | 44.27 | 50.16 | 74.00 | 23.84 | Pass | H | PK |
| 6 | 15879.8587 | 12.96 | 39.25 | 52.21 | 74.00 | 21.79 | Pass | H | PK |
| 7 | 1164.2776 | 9.93 | 38.63 | 48.56 | 74.00 | 25.44 | Pass | V | PK |
| 8 | 1951.9301 | 16.97 | 35.06 | 52.03 | 74.00 | 21.97 | Pass | V | PK |
| 9 | 3342.0228 | -12.67 | 53.52 | 40.85 | 74.00 | 33.15 | Pass | V | PK |
| 10 | 7915.3277 | -2.30 | 45.90 | 43.60 | 74.00 | 30.40 | Pass | V | PK |
| 11 | 11975.5984 | 5.88 | 44.02 | 49.90 | 74.00 | 24.10 | Pass | V | PK |
| 12 | 15894.8597 | 13.52 | 38.02 | 51.54 | 74.00 | 22.46 | Pass | V | PK |

| Mode: | | | 8DPSK Transmitting | | | Channel: | | 2480 MHz | |
|---|---|---|---|---|---|---|---|---|---|
| NO | Freq. [MHz] | Factor [dB] | Reading [dBμV] | Level [dBμV/m] | Limit [dBμV/m] | Margin [dB] | Result | Polarity | Remark |
| 1 | 1423.4949 | 10.62 | 39.49 | 50.11 | 74.00 | 23.89 | Pass | H | PK |
| 2 | 1897.3932 | 15.46 | 36.91 | 52.37 | 74.00 | 21.63 | Pass | H | PK |
| 3 | 4504.1003 | -8.56 | 49.34 | 40.78 | 74.00 | 33.22 | Pass | H | PK |
| 4 | 7820.3214 | -3.25 | 47.20 | 43.95 | 74.00 | 30.05 | Pass | H | PK |
| 5 | 11941.5961 | 5.49 | 45.38 | 50.87 | 74.00 | 23.13 | Pass | H | PK |
| 6 | 16405.8937 | 13.03 | 38.70 | 51.73 | 74.00 | 22.27 | Pass | H | PK |
| 7 | 1404.9603 | 10.62 | 38.90 | 49.52 | 74.00 | 24.48 | Pass | V | PK |
| 8 | 1919.3946 | 16.10 | 35.75 | 51.85 | 74.00 | 22.15 | Pass | V | PK |
| 9 | 3359.0239 | -12.72 | 53.36 | 40.64 | 74.00 | 33.36 | Pass | V | PK |
| 10 | 6097.2065 | -5.85 | 47.26 | 41.41 | 74.00 | 32.59 | Pass | V | PK |
| 11 | 11995.5997 | 5.89 | 45.04 | 50.93 | 74.00 | 23.07 | Pass | V | PK |
| 12 | 15900.8601 | 13.64 | 38.35 | 51.99 | 74.00 | 22.01 | Pass | V | PK |

Remark:

1) The field strength is calculated by adding the Antenna Factor, Cable Factor & Preamplifier. The basic equation with a sample calculation is as follows:
   Final Test Level =Receiver Reading + Antenna Factor + Cable Factor – Preamplifier Factor
2) Scan from 9kHz to 25GHz, the disturbance above 10GHz and below 30MHz was very low. As shown in this section, for frequencies above 1GHz, the field strength limits are based on average limits. However, the peak field strength of any emission shall not exceed the maximum permitted average limits specified above by more than 20 dB under any condition of modulation. So, only the peak measurements were shown in the report.

## Restricted bands:

**Test plot as follows:**

| | | | |
|---|---|---|---|
| EUT_Name | | Test_Model | |
| Test_Mode | GFSK Transmitting | Test_Frequency | 2402MHz |
| Tset_Engineer | Aiden.wang | Test_Date | 2024/12/20 |
| Remark | | | |

**Test Graph**

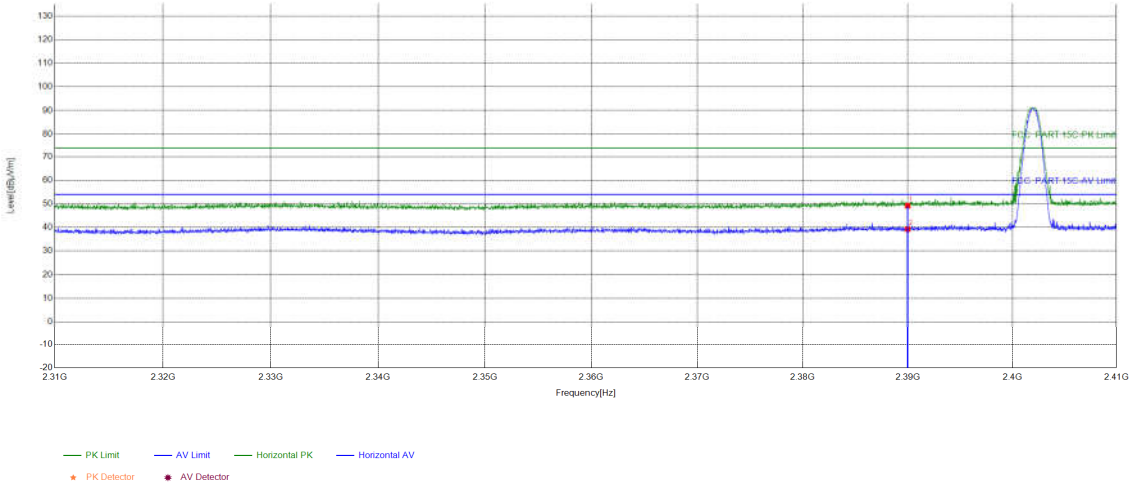


| Suspected List | | | | | | | | | |
|---|---|---|---|---|---|---|---|---|---|
| NO | Freq. [MHz] | Factor [dB] | Reading [dBμV] | Level [dBμV/m] | Limit [dBμV/m] | Margin [dB] | Result | Polarity | Remark |
| 1 | 2390 | 15.31 | 33.90 | 49.21 | 74.00 | 24.79 | PASS | Horizontal | PK |
| 2 | 2390 | 15.31 | 23.94 | 39.25 | 54.00 | 14.75 | PASS | Horizontal | AV |

| EUT_Name | | Test_Model | |
|---|---|---|---|
| Test_Mode | GFSK Transmitting | Test_Frequency | 2402MHz |
| Tset_Engineer | Aiden.wang | Test_Date | 2024/12/20 |
| Remark | | | |

**Test Graph**

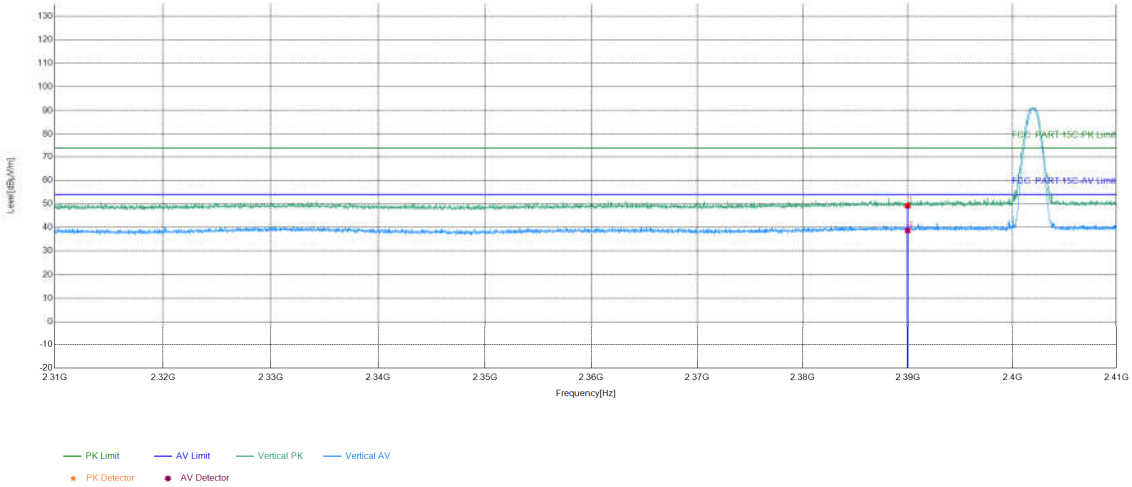


| Suspected List | | | | | | | | | |
|---|---|---|---|---|---|---|---|---|---|
| NO | Freq. [MHz] | Factor [dB] | Reading [dBμV] | Level [dBμV/m] | Limit [dBμV/m] | Margin [dB] | Result | Polarity | Remark |
| 1 | 2390 | 15.31 | 33.88 | 49.19 | 74.00 | 24.81 | PASS | Vertical | PK |
| 2 | 2390 | 15.31 | 23.40 | 38.71 | 54.00 | 15.29 | PASS | Vertical | AV |

| EUT_Name | | Test_Model | |
|---|---|---|---|
| Test_Mode | GFSK Transmitting | Test_Frequency | 2480MHz |
| Tset_Engineer | Aiden.wang | Test_Date | 2024/12/20 |
| Remark | | | |

**Test Graph**

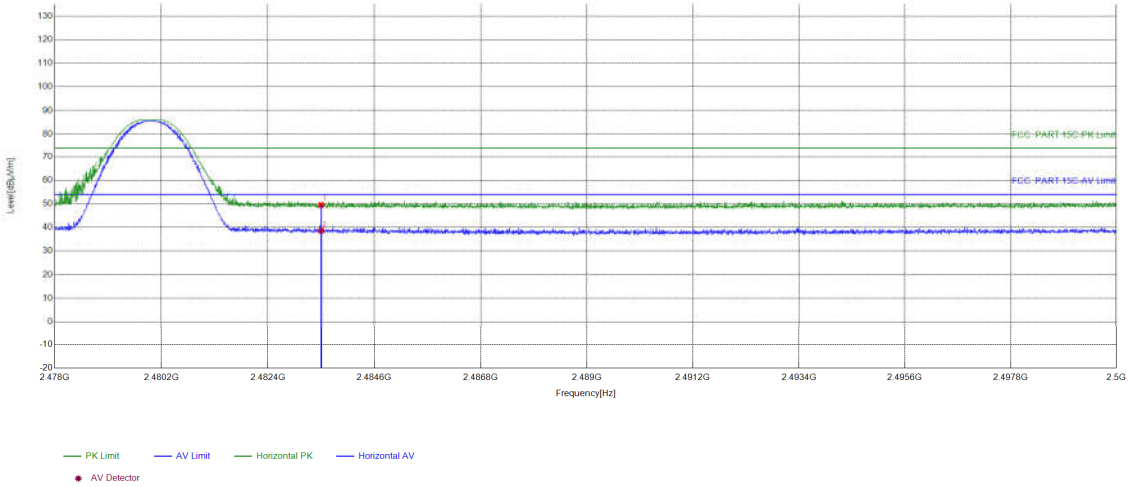


| Suspected List | | | | | | | | | |
|---|---|---|---|---|---|---|---|---|---|
| NO | Freq. [MHz] | Factor [dB] | Reading [dBμV] | Level [dBμV/m] | Limit [dBμV/m] | Margin [dB] | Result | Polarity | Remark |
| 1 | 2483.5 | 15.16 | 34.34 | 49.50 | 74.00 | 24.50 | PASS | Horizontal | PK |
| 2 | 2483.5 | 15.16 | 23.45 | 38.61 | 54.00 | 15.39 | PASS | Horizontal | AV |

| EUT_Name | | Test_Model | |
|---|---|---|---|
| Test_Mode | GFSK Transmitting | Test_Frequency | 2480MHz |
| Tset_Engineer | Aiden.wang | Test_Date | 2024/12/20 |
| Remark | | | |

**Test Graph**

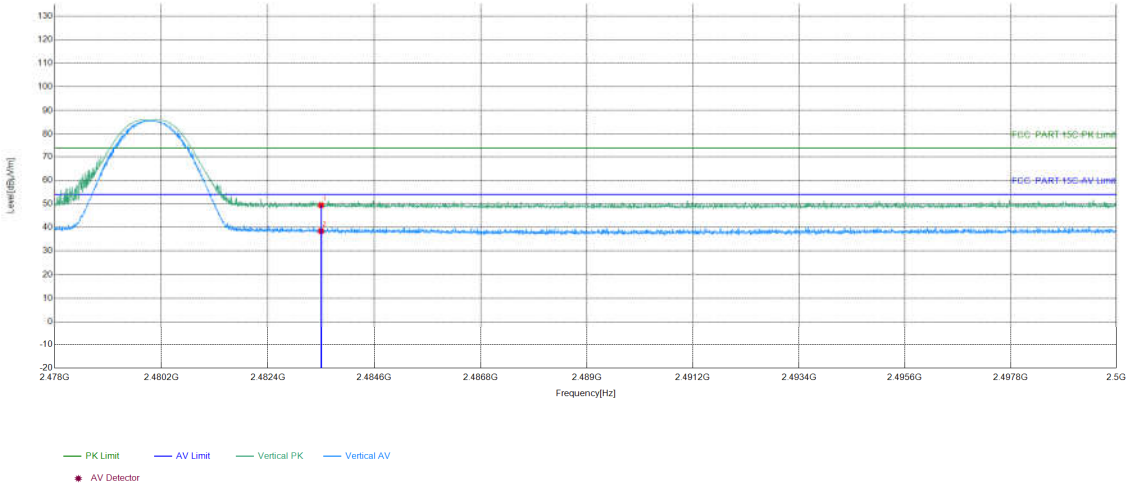


| Suspected List | | | | | | | | | |
|---|---|---|---|---|---|---|---|---|---|
| NO | Freq. [MHz] | Factor [dB] | Reading [dBμV] | Level [dBμV/m] | Limit [dBμV/m] | Margin [dB] | Result | Polarity | Remark |
| 1 | 2483.5 | 15.16 | 34.29 | 49.45 | 74.00 | 24.55 | PASS | Vertical | PK |
| 2 | 2483.5 | 15.16 | 23.29 | 38.45 | 54.00 | 15.55 | PASS | Vertical | AV |

| EUT_Name | | Test_Model | |
|---|---|---|---|
| Test_Mode | π/4DQPSK Transmitting | Test_Frequency | 2402MHz |
| Tset_Engineer | Aiden.wang | Test_Date | 2024/12/20 |
| Remark | | | |

**Test Graph**

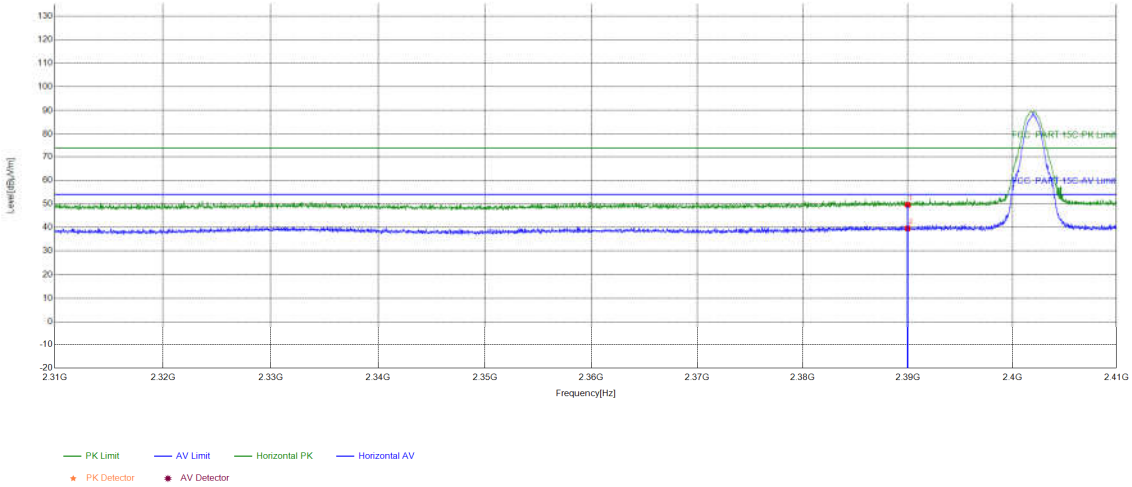


| Suspected List | | | | | | | | | |
|---|---|---|---|---|---|---|---|---|---|
| NO | Freq. [MHz] | Factor [dB] | Reading [dBμV] | Level [dBμV/m] | Limit [dBμV/m] | Margin [dB] | Result | Polarity | Remark |
| 1 | 2390 | 15.31 | 34.27 | 49.58 | 74.00 | 24.42 | PASS | Horizontal | PK |
| 2 | 2390 | 15.31 | 24.28 | 39.59 | 54.00 | 14.41 | PASS | Horizontal | AV |

| | | | |
|---|---|---|---|
| EUT_Name | | Test_Model | |
| Test_Mode | π/4DQPSK Transmitting | Test_Frequency | 2402MHz |
| Tset_Engineer | Aiden.wang | Test_Date | 2024/12/20 |
| Remark | | | |

**Test Graph**

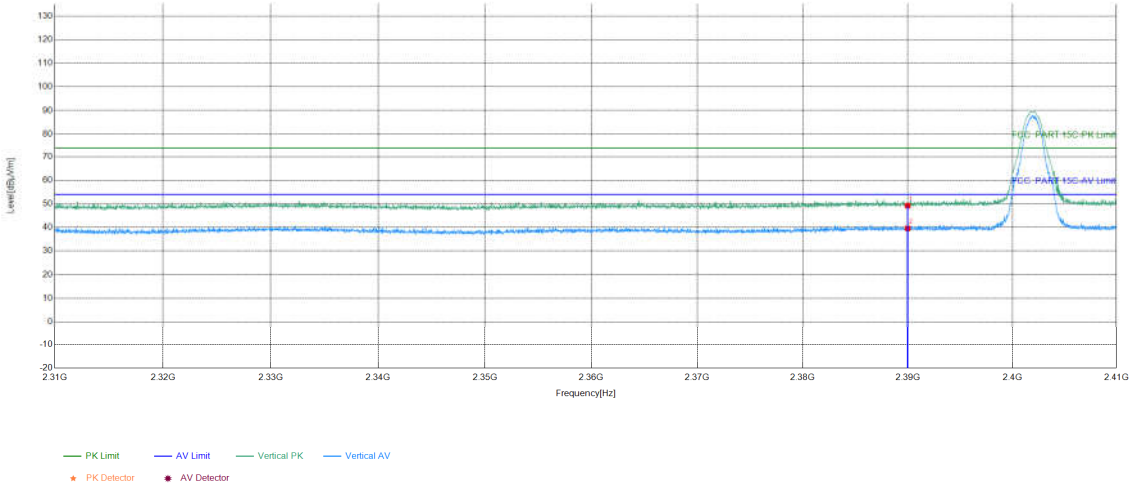


| Suspected List | | | | | | | | | |
|---|---|---|---|---|---|---|---|---|---|
| NO | Freq. [MHz] | Factor [dB] | Reading [dBμV] | Level [dBμV/m] | Limit [dBμV/m] | Margin [dB] | Result | Polarity | Remark |
| 1 | 2390 | 15.31 | 33.94 | 49.25 | 74.00 | 24.75 | PASS | Vertical | PK |
| 2 | 2390 | 15.31 | 24.29 | 39.60 | 54.00 | 14.40 | PASS | Vertical | AV |

| EUT_Name | | Test_Model | |
|---|---|---|---|
| Test_Mode | π/4DQPSK Transmitting | Test_Frequency | 2480MHz |
| Tset_Engineer | Aiden.wang | Test_Date | 2024/12/20 |
| Remark | | | |

**Test Graph**

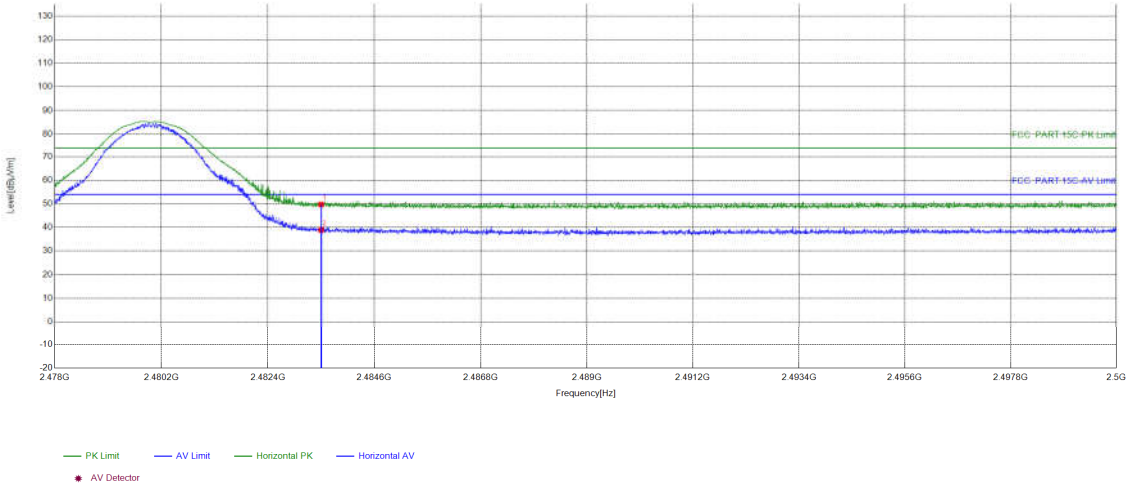


| Suspected List | | | | | | | | | |
|---|---|---|---|---|---|---|---|---|---|
| NO | Freq. [MHz] | Factor [dB] | Reading [dBμV] | Level [dBμV/m] | Limit [dBμV/m] | Margin [dB] | Result | Polarity | Remark |
| 1 | 2483.5 | 15.16 | 34.59 | 49.75 | 74.00 | 24.25 | PASS | Horizontal | PK |
| 2 | 2483.5 | 15.16 | 23.75 | 38.91 | 54.00 | 15.09 | PASS | Horizontal | AV |

| | | | |
|---|---|---|---|
| EUT_Name | | Test_Model | |
| Test_Mode | π/4DQPSK Transmitting | Test_Frequency | 2480MHz |
| Tset_Engineer | Aiden.wang | Test_Date | 2024/12/20 |
| Remark | | | |

**Test Graph**

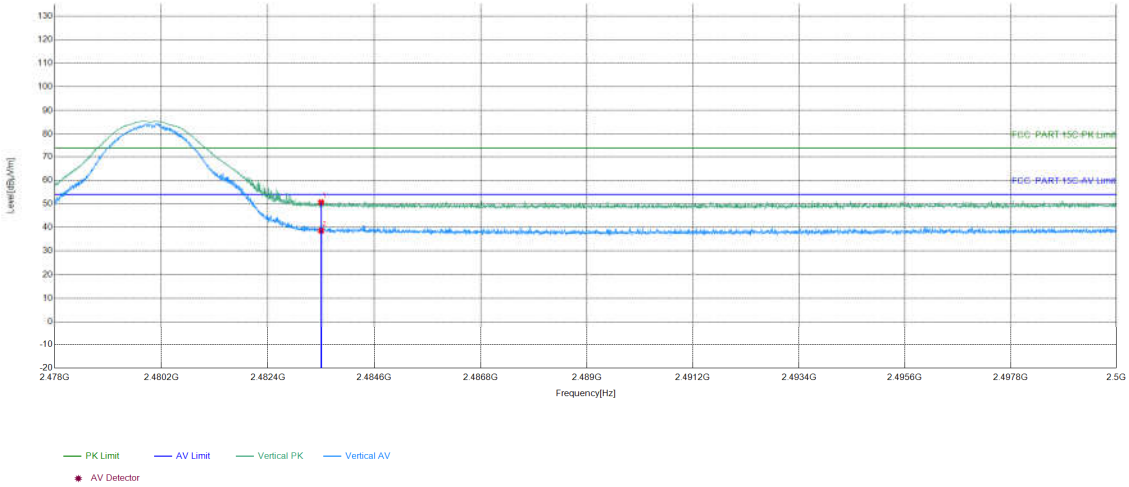


| Suspected List | | | | | | | | | |
|---|---|---|---|---|---|---|---|---|---|
| NO | Freq. [MHz] | Factor [dB] | Reading [dBμV] | Level [dBμV/m] | Limit [dBμV/m] | Margin [dB] | Result | Polarity | Remark |
| 1 | 2483.5 | 15.16 | 35.51 | 50.67 | 74.00 | 23.33 | PASS | Vertical | PK |
| 2 | 2483.5 | 15.16 | 23.47 | 38.63 | 54.00 | 15.37 | PASS | Vertical | AV |

| | | | |
|---|---|---|---|
| EUT_Name | | Test_Model | |
| Test_Mode | 8DPSK Transmitting | Test_Frequency | 2402MHz |
| Tset_Engineer | Aiden.wang | Test_Date | 2024/12/20 |
| Remark | | | |

**Test Graph**

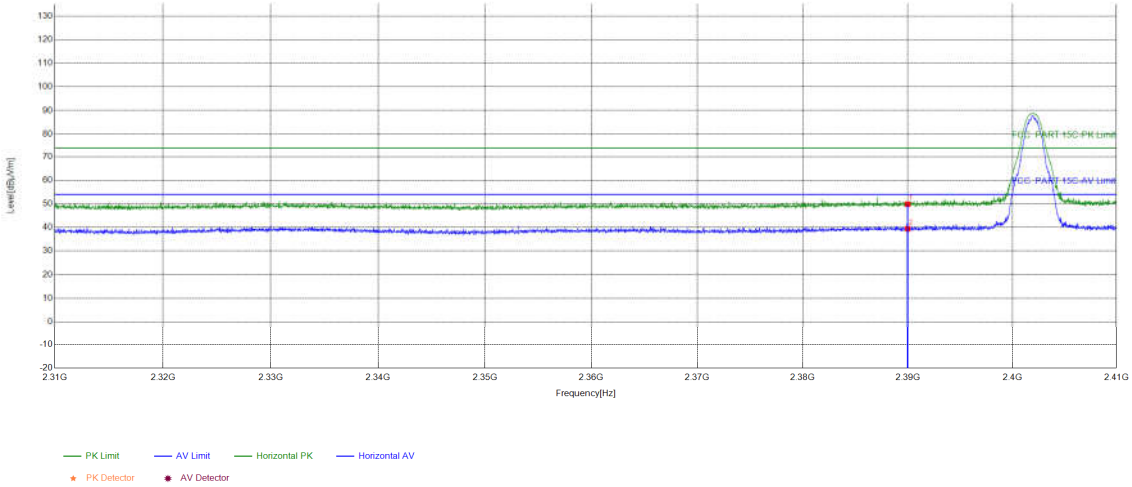


| Suspected List | | | | | | | | | |
|---|---|---|---|---|---|---|---|---|---|
| NO | Freq. [MHz] | Factor [dB] | Reading [dBμV] | Level [dBμV/m] | Limit [dBμV/m] | Margin [dB] | Result | Polarity | Remark |
| 1 | 2390 | 15.31 | 34.53 | 49.84 | 74.00 | 24.16 | PASS | Horizontal | PK |
| 2 | 2390 | 15.31 | 24.11 | 39.42 | 54.00 | 14.58 | PASS | Horizontal | AV |

| | | | |
|---|---|---|---|
| EUT_Name | | Test_Model | |
| Test_Mode | 8DPSK Transmitting | Test_Frequency | 2402MHz |
| Tset_Engineer | Aiden.wang | Test_Date | 2024/12/20 |
| Remark | | | |

**Test Graph**

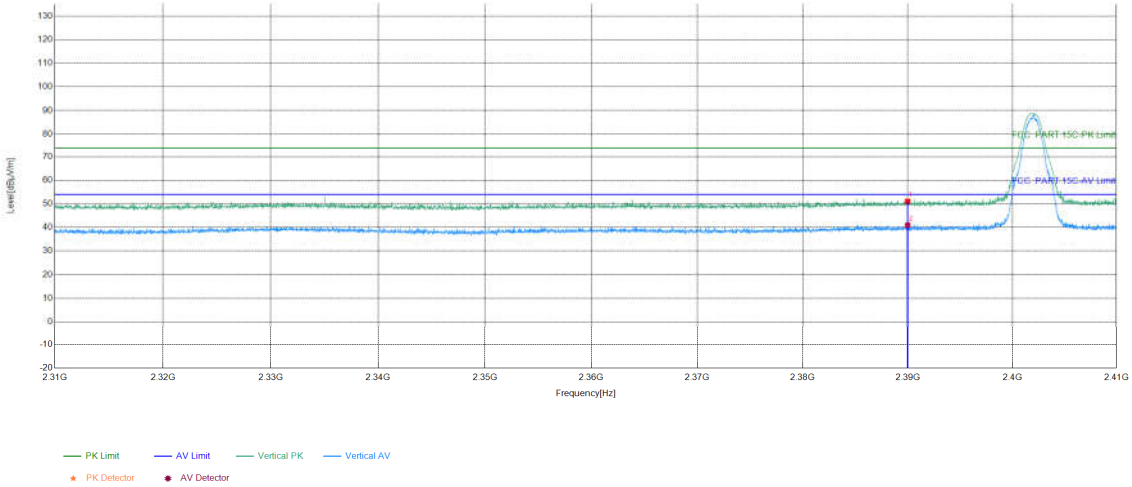


| Suspected List | | | | | | | | | |
|---|---|---|---|---|---|---|---|---|---|
| NO | Freq. [MHz] | Factor [dB] | Reading [dBμV] | Level [dBμV/m] | Limit [dBμV/m] | Margin [dB] | Result | Polarity | Remark |
| 1 | 2390 | 15.31 | 35.69 | 51.00 | 74.00 | 23.00 | PASS | Vertical | PK |
| 2 | 2390 | 15.31 | 25.62 | 40.93 | 54.00 | 13.07 | PASS | Vertical | AV |

| EUT_Name | | Test_Model | |
|---|---|---|---|
| Test_Mode | 8DPSK Transmitting | Test_Frequency | 2480MHz |
| Tset_Engineer | Aiden.wang | Test_Date | 2024/12/20 |
| Remark | | | |

**Test Graph**

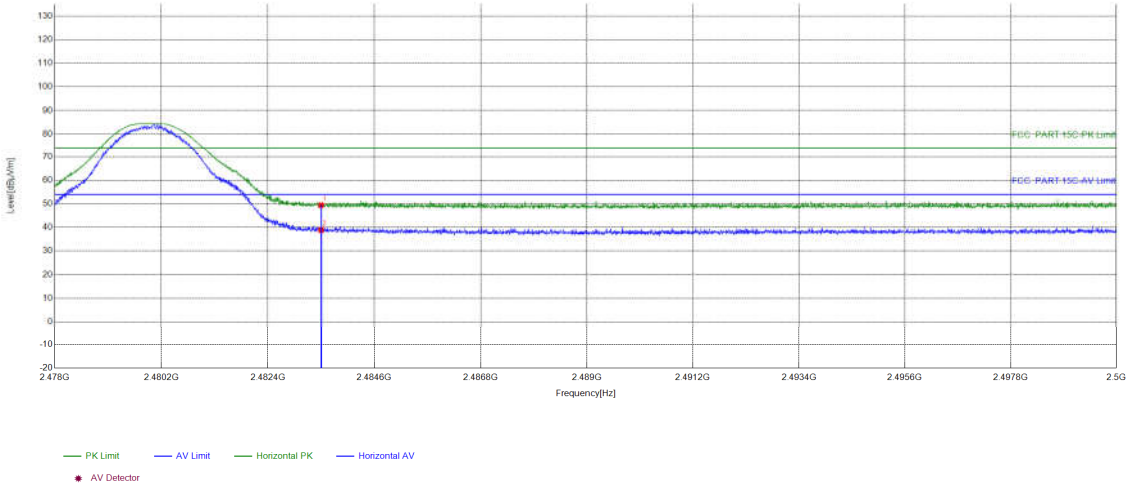


| Suspected List | | | | | | | | | |
|---|---|---|---|---|---|---|---|---|---|
| NO | Freq. [MHz] | Factor [dB] | Reading [dBμV] | Level [dBμV/m] | Limit [dBμV/m] | Margin [dB] | Result | Polarity | Remark |
| 1 | 2483.5 | 15.16 | 34.30 | 49.46 | 74.00 | 24.54 | PASS | Horizontal | PK |
| 2 | 2483.5 | 15.16 | 23.70 | 38.86 | 54.00 | 15.14 | PASS | Horizontal | AV |

| EUT_Name | | Test_Model | |
|---|---|---|---|
| Test_Mode | 8DPSK Transmitting | Test_Frequency | 2480MHz |
| Tset_Engineer | Aiden.wang | Test_Date | 2024/12/20 |
| Remark | | | |

**Test Graph**

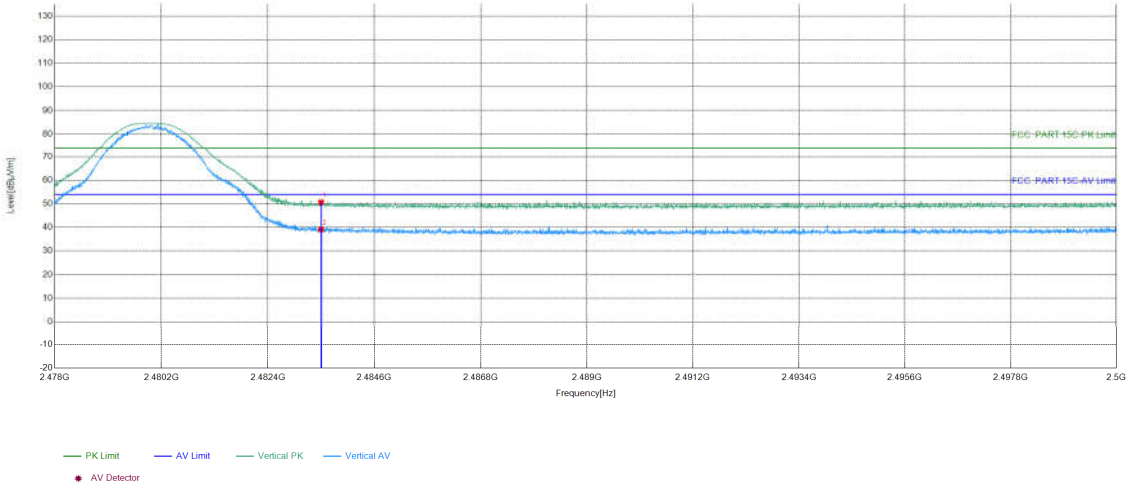


| Suspected List | | | | | | | | | |
|---|---|---|---|---|---|---|---|---|---|
| NO | Freq. [MHz] | Factor [dB] | Reading [dBμV] | Level [dBμV/m] | Limit [dBμV/m] | Margin [dB] | Result | Polarity | Remark |
| 1 | 2483.5 | 15.16 | 35.49 | 50.65 | 74.00 | 23.35 | PASS | Vertical | PK |
| 2 | 2483.5 | 15.16 | 24.01 | 39.17 | 54.00 | 14.83 | PASS | Vertical | AV |

Note:
The field strength is calculated by adding the Antenna Factor, Cable Factor & Preamplifier. The basic equation with a sample calculation is as follows:
Final Test Level =Receiver Reading - Correct Factor
Correct Factor = Preamplifier Factor– Antenna Factor–Cable Factor

# 6 Appendix A

Refer to Appendix: Bluetooth Classic of EED32Q82023102

# 8 PHOTOGRAPHS OF EUT Constructional Details

Refer to Report No.EED32Q82023101 for EUT external and internal photos.

**Statement**

1. This report is considered invalid without approved signature, special seal and the seal on the perforation;

2. The Company Name shown on Report and Address, the sample(s) and sample information was/were provided by the applicant who should be responsible for the authenticity which CTI hasn't verified;

3. The result(s) shown in this report refer(s) only to the sample(s) tested;

4. Unless otherwise stated,the decision rule for conformity reporting is based on Binary Statement for Simple Acceptance Rule stated in ILAC-G8:09/2019/CNAS-GL015:2022;

5. Without written approval of CTI, this report can't be reproduced except in full;

*** End of Report ***