DEFIANT®

Item #1012 398 760
Model #DFI-0654LK-WH

USE AND CARE GUIDE

MOTION SECURITY LIGHT

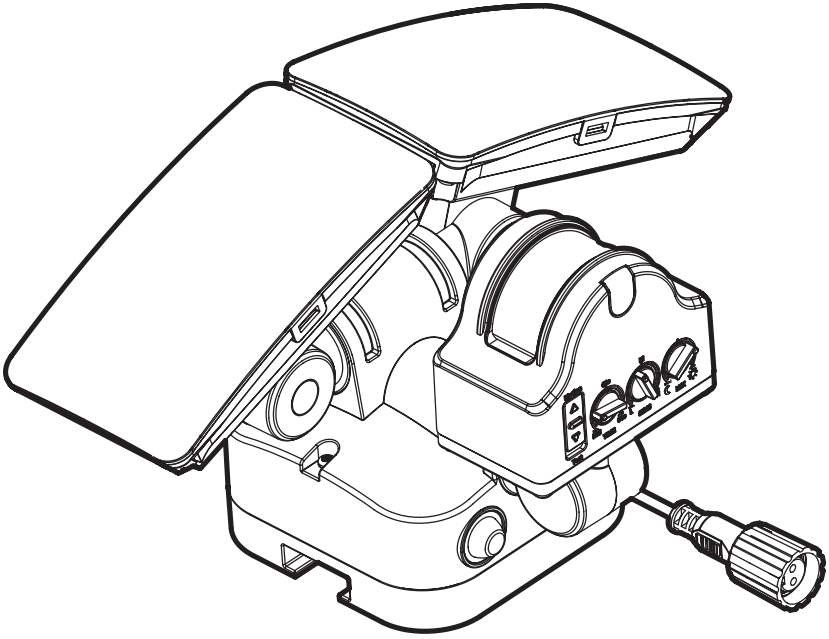

Questions, problems, missing parts? Before returning to the store,
call Defiant Customer Service
8 a.m. - 7 p.m., EST, Monday - Friday, 9 a.m. - 6 p.m., EST, Saturday

1-866-308-3976

HOMEDEPOT.COM

THANK YOU

We appreciate the trust and confidence you have placed in Defiant through the purchase of this motion security light. We strive to continually create quality products designed to enhance your home. Visit us online to see our full line of products available for your home improvement needs. Thank you for choosing Defiant!

Table of Contents

Safety Information **2**
Precautions 2
FCC Notice 3
Warranty **3**
3-Year Limited Warranty 3
What Is Covered 3
What Is Not Covered 3
Pre-Installation **4**
Planning Installation 4
Initial Battery Charge 4
Light Fixture 4
Mounting Location 4
Solar Panel 4
Specifications 5
Tools Required 5
Hardware Included 5
Package Contents 6
Installation **7**
Operation **10**
Maintenance **15**
Care And Cleaning **15**
Troubleshooting **16**

Safety Information

PRECAUTIONS

- Please read and understand this entire manual before attempting to assemble, install, or operate this light fixture.
- The light fixture should be mounted approximately 8 ft. (2.4 m) above the ground.
- Do not cut the solar panel wire. Discontinue use if the wire becomes frayed or broken.
- Do not immerse components in liquid.
- Do not use any other charging device other than the single solar charging panel provided with this light. Doing so may result in injury or damage to the light and voids any warranty.
- Position the cord so that it is securely fastened and will not result in a hazard (such as tripping).

WARNING: To prevent possible SERIOUS INJURY or DEATH, never allow small children near batteries. If a battery is swallowed, immediately notify a doctor.

WARNING: DO NOT DISPOSE OF BATTERIES IN FIRE. BATTERIES MAY EXPLODE OR LEAK.

WARNING: Do not mix old and new batteries.

WARNING: Do not mix alkaline, standard (carbon-zinc), or rechargeable (Ni-Cad, Ni-MH, etc.) batteries.

NOTICE: When replacing batteries, recycle used batteries or dispose of them in accordance with local regulations.

Safety Information (continued)

FCC NOTICE

This device complies with Part 15 of the FCC Rules. Operation is subject to the following two conditions: (1) This device may not cause harmful interference, and (2) this device must accept any interference received, including interference that may cause undesired operation.
Caution: Changes or modifications to this unit not expressly approved by the party responsible for compliance could void the user authority to operate the equipment.

Notes: This equipment has been tested and found to comply with the limits for a Class B digital device, pursuant to Part 15 of the FCC Rules. These limits are designed to provide reasonable protection against harmful interference in a residential installation. This equipment generates uses and can radiate radio frequency energy and, if not installed and used in accordance with the instructions, may cause harmful interference to radio communications. However, there is no guarantee that interference will not occur in a particular installation. If this equipment does cause harmful interference to radio or television reception, which can be determined by turning the equipment off and on, the user is encouraged to try to correct the interference by one or more of the following measures:

- □ Reorient or relocate the receiving antenna.
- □ Increase the separation between the equipment and receiver.
- □ Connect the equipment into an outlet on a circuit different from that to which the receiver is connected.
- □ Consult the dealer or an experienced radio/TV technician for help.

Note: If shielded cables or special accessories are required for compliance, a statement must be included which instructs the user to employ them, for example, Shielded cables must be used with this unit to ensure compliance with the Class B FCC limits.

Warranty

3-YEAR LIMITED WARRANTY

WHAT IS COVERED

The manufacturer warrants this fixture to be free from defects in materials and workmanship for a period of three (3) years from date of purchase. The manufacturer warrants the included bulbs to be free from defects in materials and workmanship for a limited lifetime from date of purchase. This warranty applies only to the original consumer purchaser and only to products used in normal use and service. If this product is found to be defective, the manufacturer's only obligation, and your exclusive remedy, is the repair or replacement of the product at the manufacturer's discretion, provided that the product has not been damaged through misuse, abuse, accident, modifications, alteration, neglect, or mishandling. This warranty shall not apply to any product that is found to have been improperly installed, set-up, or used in any way not in accordance with the instructions supplied with the product. This warranty shall not apply to a failure of the product as a result of an accident, misuse, abuse, negligence, alteration, faulty installation, or any other failure not relating to faulty material or workmanship. This warranty shall not apply to the finish on any portion of the product, such as surface and/or weathering, as this is considered normal wear and tear.

WHAT IS NOT COVERED

The manufacturer does not warrant and specifically disclaims any warranty, whether expressed or implied, of fitness for a particular purpose, other than the warranty contained herein. The manufacturer specifically disclaims any liability and shall not be liable for any consequential or incidental loss or damage, including but not limited to any labor/expense costs involved in the replacement or repair of said product.

Contact the Customer Service Team at 1-866-308-3976 or visit www.HomeDepot.com.

Pre-Installation

PLANNING INSTALLATION

Before installing the light fixture, ensure that all parts are present. Compare parts with the Hardware Included and Package Contents sections. If any part is missing or damaged, do not attempt to assemble, install, or operate this light fixture.

Estimated installation time: 30 minutes

BATTERY OPERATION

This light operates with batteries charged from the attached solar panel. If the voltage of the Nickel-metal hydride (Ni-MH) batteries run down to 3V, the light will not activate when the motion sensor is triggered. When the solar panel has recharged the Ni-MH batteries, and voltage is above 3V, the light will return to normal operation.

INITIAL BATTERY CHARGE

IMPORTANT: Weather conditions such as clouds, rain, snow, or obstructions like buildings and trees may affect the solar panel's ability to fully recharge the batteries.

PRIOR TO USE, the batteries may require 1 to 2 days of full, direct sunlight with the switch in the OFF position. Connect the solar panel cord plug with the connector extending from the bottom of the light housing and aim the solar panel toward the South, tilting it approximately 50° from horizontal.

- ☐ Actual operating time will vary depending upon how frequently the light is turned on by the motion sensor.
- ☐ Solar lighting is not designed to equal standard 120V lighting. The amount of light output is reduced to allow the sun time to fully recharge the battery between lighting cycles.
- ☐ Solar collection is only effective in direct sunlight. Every hour the light is on requires a minimum of 5 hours of sunlight charging.

MOUNTING LOCATION

Ensure the solar panel is placed on the southern-facing portion or highest point of a structure to maximize direct sunlight exposure. The fewer obstructions between the solar panel and the sun, the longer the light will operate.

The light fixture should be installed within easy reach of the solar panel's power cord. Additional 30 ft. extension cords (sold separately) can be purchased from HomeDepot.com.

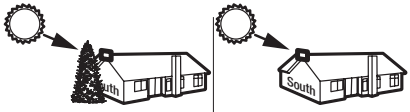

Poor Position: Tree Blocks Sunlgiht from Solar Panel

Good Position: Faces south with no obstructions

LIGHT FIXTURE

The main unit contains LEDs, a motion sensor, and rechargeable Nickel-metal hydride batteries. The motion sensor has a field of vision of 50 ft. (15 m) and a 180° detection angle at 77°F (25°C).

SOLAR PANEL

The solar panel converts the sun's energy into electricity, thus charging the batteries in the solar light fixture. The solar panel requires direct sunlight falling onto its surface for as long as possible over the course of the day.

The light fixture should be installed within easy reach of the solar panel's power cord. Additional 30 ft. extension cords (sold separately) can be purchased from HomeDepot.com.

NOTE: At high noon, adjust the solar panel so that it faces the sun. During any time of year, this adjustment will provide optimal positioning for collecting solar energy.

You can also angle the panel up by 50°, which should provide for adequate exposure.

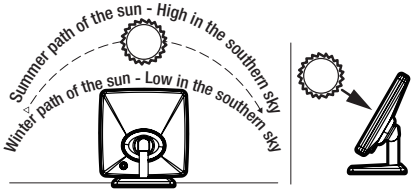

SPECIFICATIONS

Range	Up to 50 ft. (15 m) (Varies with surrounding temperature)
Sensing angle	Up to 180°
Lumens	Solar Power: 1000 LM
Power requirements	Solar panel and rechargeable Nickel-metal Hydride Batteries
Panel Connection	USB-C
Operating modes	Motion and Test
Time delay	30, 60, 90 seconds

TOOLS REQUIRED

Safety goggles

Phillips screwdriver

Level

Drill Bits (3/32 in. and 7/32 in.)

Drill

Ladder

HARDWARE INCLUDED

NOTE: Hardware not shown to actual size.

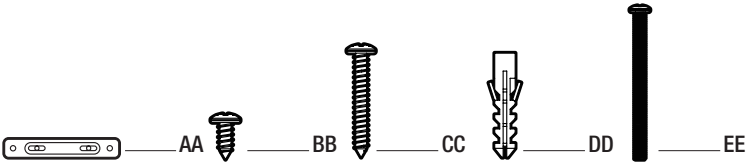

Part	Description	Quantity
AA	Mounting plate	1
BB	Base screw	1
CC	Mounting screws	6
DD	Anchors	6
EE	Mounting bolts	2

PACKAGE CONTENTS

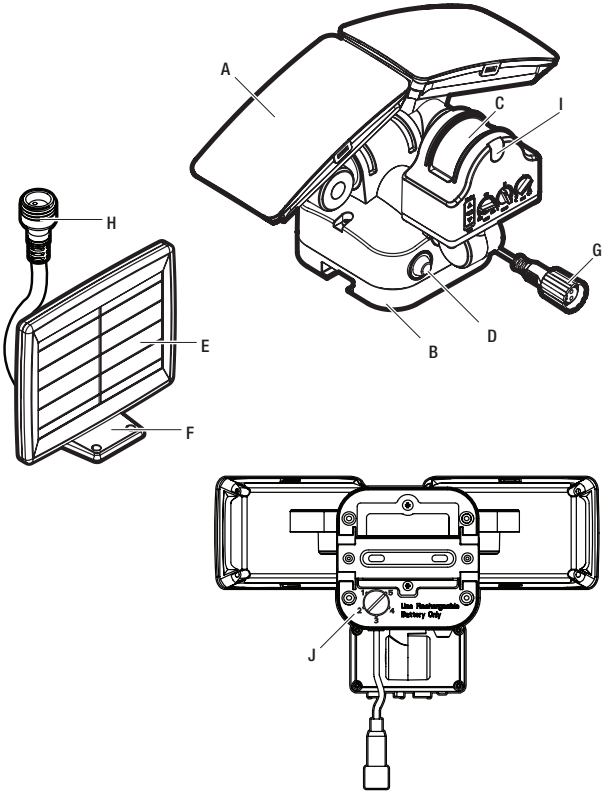

Part	Description
A	Lamp head
B	Light fixture
C	Motion sensor
D	Power button
E	Solar panel
F	Solar panel cradle
G	Extendable cord (pre-assembled to light fixture (B))
H	Extendable cord (pre-assembled to solar panel (E))
I	Indicator light
J	Channel Dial

1 Determining the mounting location

IMPORTANT: If installing multiple lights, set each light to a channel. Proceed to "Linking two or more lights" in the Operations section of this guide.

NOTE: The light fixture should be mounted approximately 8 ft. (2.4 m) above the ground.

NOTE: Ensure the fixture and the solar panel are located close enough together for the cord to reach. You can also add on an extension cord. Ensure the solar panel faces South.

- ☐ Determine the mounting location - wall or eave mount.
- ☐ Position the lamp head (A) in the general direction of the desired light coverage.

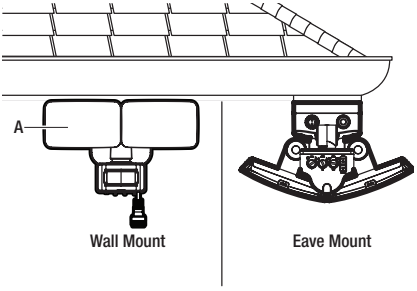

Incorrect

2 Setting the sensor for wall or eave mounting

NOTE: Adjust the sensor angle to a coverage desired.

- ☐ When wall-mounted, the motion sensor (C) can be tilted downward to an almost 90º angle, and turned side-to-side to cover a general area.
- ☐ When eave-mounted, the motion sensor (C) can be tilted outward, or turned side-to-side.

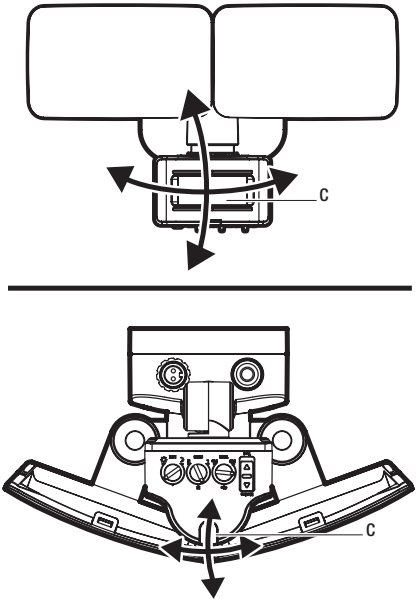

3 Installing the mounting plate

NOTE: Make sure there is enough vertical space above the mounting plate to allow the light fixture to be mounted.

NOTE: Make sure there is enough space on the left and right sides of the mounting plate to position and slide on the light.

Place the mounting plate (AA) against the mounting surface and ensure the mounting plate (AA) is level. Mark the hole locations on the mounting surface, through which the mounting screws (CC) will be threaded.

- ☐ If mounting to a wooden surface, drill two 3/32 in. holes into the mounting surface. Install the two mounting screws (CC) through the mounting plate (AA) and into the mounting surface.
- ☐ If mounting to wall board or brick, drill two 7/32 in. holes into the mounting surface. Insert the wall anchors (DD) and attach the mounting plate (AA) using the two mounting screws (CC).

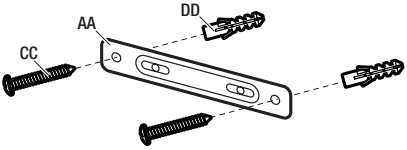

4 Mounting the light fixture

- ☐ Slide the rear of the light fixture (B) onto the mounting plate (AA) from either the left or right side. Make sure the sides of the mounting plate are flush with the sides of the rear of the light fixture (B).
- ☐ Secure the fixture in place on the mounting plate using the mounting bolts (EE). Insert mounting bolts (EE) through the left and right sides of the light, and into the mounting plate (AA) in the back.

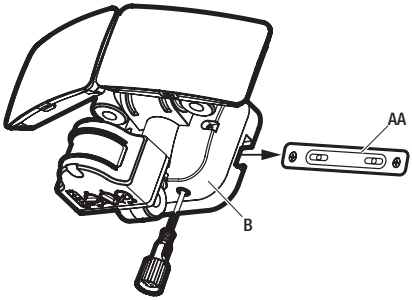

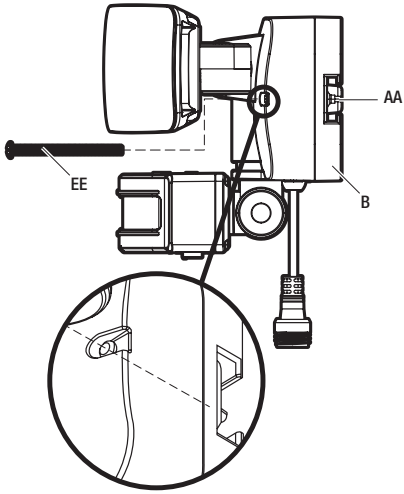

5 Mounting the solar panel

RECOMMENDED: Caulk around the base and on top of the screw heads after installation.

Place the solar base (F) against the mounting surface and mark the mounting holes.

- ☐ Place the panel (E) into the base (F) and use the base screw (BB) to secure the panel (E) in place on the base (F).
- ☐ If mounting to a wooden surface, drill four 3/32 in. holes into the mounting surface. Install the four mounting screws (CC) through the solar panel base (F) and into the mounting surface.
- ☐ If mounting to wall board or brick, drill four 7/32 in. holes into the mounting surface. Insert the wall anchors (DD) and attach the solar panel base (F) using the four mounting screws (CC).
- ☐ Once the solar panel base (F) has been installed, position the solor panel (E) above it, adjusting the direction and angle of the panel to its desired position to receive optimal sunlight.

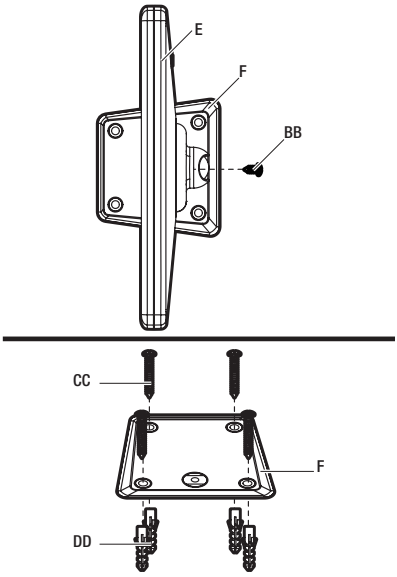

6 Adjusting the solar panel

IMPORTANT: The solar panel (E) must receive as much direct sunlight over the course of the day as possible. Keep in mind that shadows may block the sunlight from reaching the solar panel (E) during the day.

- ☐ Rotate the solar panel (E) to the desired angle.

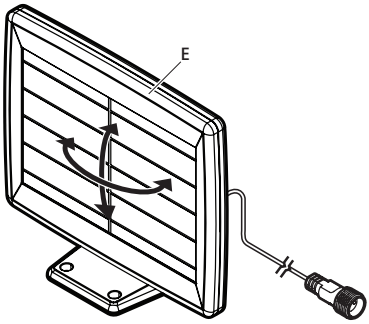

7 Connecting the solar panel to the light fixture

- ☐ Carefully connect the solar panel (E) cable to the light fixture (B). Screw the caps on the plugs firmly.
- ☐ Wrap any excess solar panel cable around the base (F) located on the rear of the solar panel (E). Leave enough loose cable to form a drip loop (K).

IMPORTANT: Push the switch to the OFF position and allow the battery to charge with 1 to 2 days of full sunshine before testing.

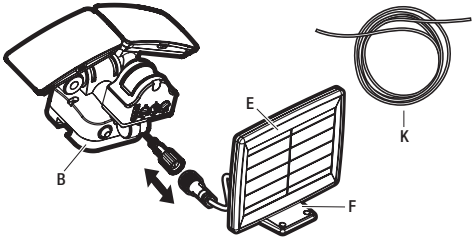

1 Adjusting the lamp heads

- If needed, gently grasp the lamp heads (A) and tilt them up or down or side-to-side to adjust the light coverage area

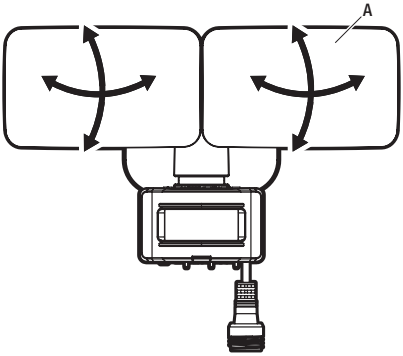

2 Using the ON/OFF Button

- Press the Power button (D) to turn the light (B) ON. The lamp heads will flash, and the indicator light will shine red or green.
- The light should remain ON for continuous operation, and there is no need to actively turn the unit ON and OFF regularly.
- Press the Power button (D) to turn the light (B) OFF if the light will not be used for an extended period of time.

NOTE: Pushing the button IN turns the light (B) ON (AUTO mode). Pushing the button again, so that the Power button is out and extended, turns the light OFF.

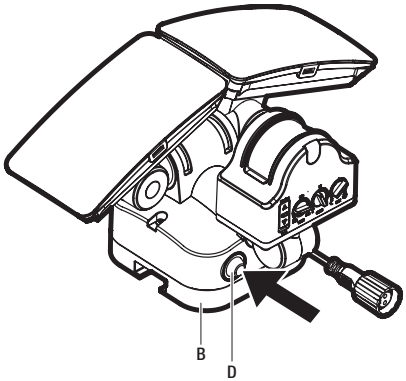

3 Testing the light

NOTE: It is recommended that the light be tested before being placed in regular operation.

Remember to set the switch from Test to Motion after testing the light.

NOTE: Testing the unit indoors or lower than 7 ft. from the ground may not enable the light to work optimally when mounted into its final outdoor position.

NOTE: With the Power button (D) in the OFF position, allow the unit to charge in direct sunlight for at least 6 hours before testing, or placing into normal operation.

Before placing the light in normal operation (Motion mode), it is best to test the light LEDs and motion sensor. Here is the process for doing so:

- ☐ Activate the light by pressing the Power button (D) to the ON position.
- ☐ Switch the Motion/Test switch to 'Test'. The light will turn ON, and stay on continuously for 1 minute. Use this time to adjust the LED light heads to where you would like them to shine when motion is detected.
- ☐ After the first minute, the light will turn OFF, but will activate for 5 seconds every time motion is detected. Use this time to adjust the motion sensor (C) to where you want the light to detect motion and activate. While the switch is in 'Test' mode, the light will continue to activate in 5 second intervals.
- ☐ When finished with these adjustments, switch back to 'Motion', and the light will go into normal operation. Depending on your LUX setting and time of day, the light may turn OFF until it's dark enough to activate.

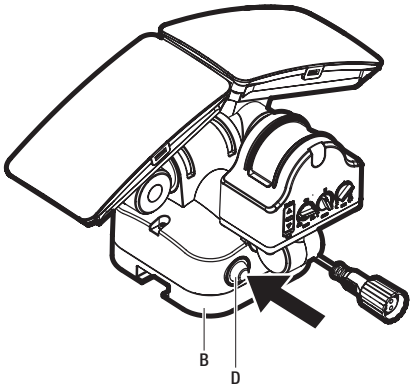

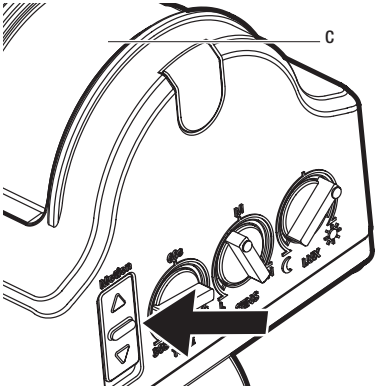

4 Reading the indicator light

- The indicator light is located below the motion sensor (C), and shows the basic status of the light.
- If the indicator light flashes RED twice, the sensor is detecting motion. This is an indication that the motion sensor is working, even if the LED light heads are not activating.
- If the indicator light is GREEN, the batteries are charging. This is an indication that the batteries are not depleted, and the transfer of solar energy to the rechargeable batteries is working.

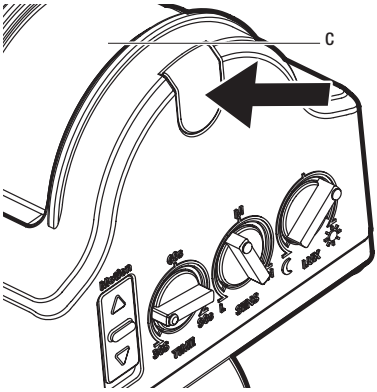

5 Adjusting the light timer

NOTE: The TIME dial controls the amount of time the light (B) will stay on full brightness after motion has been detected. The timer is adjustable from 30, 60, 90 seconds.

- To increase the time, turn the TIME dial towards the 90 second position.
- To decrease the time, turn the TIME dial towards the 30 second position.

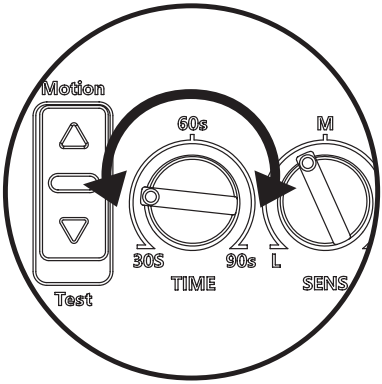

6 Adjusting the LUX

NOTE: Adjust the setting of the environmental light brightness to trigger the photocell.

- To turn on the light in a very dark area, turn the LUX dial towards the moon icon.
- To turn on the light during early/late daylight, turn the LUX dial towards the sun icon.

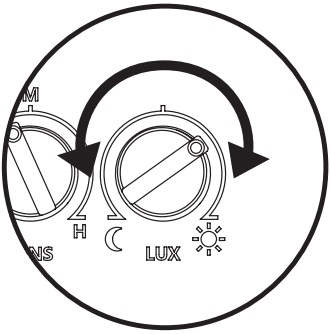

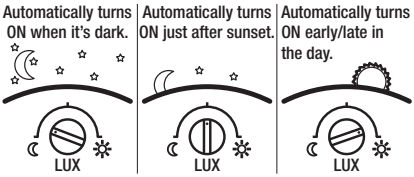

7 Adjusting the sensitivity

NOTE: The SENS dial adjusts the sensitivity of the motion sensor.

NOTE: The sensor is not designed to detect the motion of dogs, cats or other pets.

- To increase sensitivity, and increase the sensor range up to 50 ft., turn the SENS dial towards the "H" position.
- To decrease sensitivity, and reduce the sensor range, turn the SENS dial towards the "L" position.

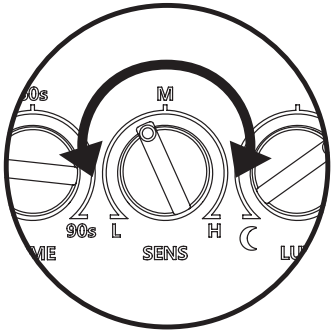

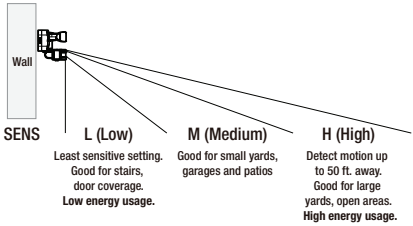

8 Linking two or more lights

- If you have more than one linkable solar security light, they can be wirelessly connected to 1 of 5 channels, so that if one light detects motion, all lights in the same channel will activate.
- Determine how many lights will be linked, and to which channel(s) they will be connected. Up to 10 lights can be connected to any one channel. No light can be connected to more than 1 channel at a time.

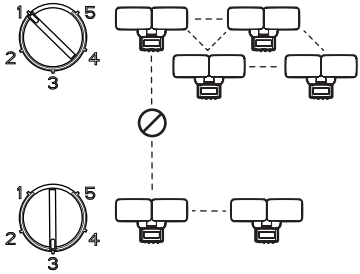

9 Adjust channel for each light

NOTE: Motion detected in one channel will not activate lights that are not in the same channel. The channel can be changed as many times as needed.

- On the back of the solar light, there is the Channel Dial (K), used for selecting the channel to which the light will react.
- Adjust the dial to 1 of 5 channel settings, and make a note of which lights are connected to their respective channels.
- When all lights are charged and active, the linkable feature will be active as well.

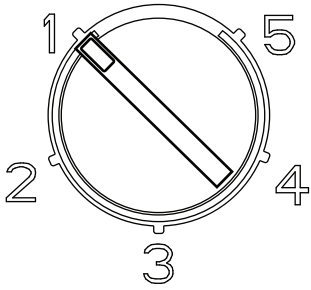

Maintenance

When the pre-installed, rechargeable Nickel-metal Hydride (Ni-MH) batteries have reached the end of their useful life, they can be easily replaced.

- **This unit requires three AA, 2000 mAh Ni-MH replacement batteries, which can be purchased at The Home Depot.**
- Disconnect the light from the solar panel, and unmount from its position, placing the light on a sturdy surface.
- Unscrew and remove the back panel to access the batteries, and remove the batteries from the cradle.
- Place the new Ni-MH batteries in the cradle, being careful to align the positive/negative poles to their corresponding icons in the cradle.
- Replace the rear cover, screwing it securely into position. Remount the light, connect the solar panel, and follow the installation instructions.
- Properly dispose of the depleted Ni-MH batteries.

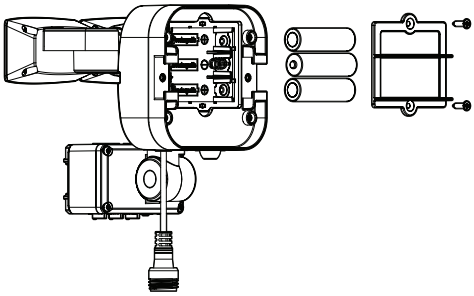

Care and Cleaning

- To prolong the original appearance, clean the light fixture with clear water and a soft, damp cloth only.
- Periodically clean the solar panel with a soft cloth and warm water. Do not hose spray. Keep the panel clear of snow and leaves. Make sure trees and other objects do not block sunlight from the panel.
- Do not use paints, solvents, or other chemicals on this light fixture. They could cause a premature deterioration of the finish. This is not a defect in the finish and will not be covered by the warranty.
- Do not spray the light fixture with a hose or power washer.
- If not to be used for several weeks, turn the unit OFF. Store it with the panel connected and where the panel can gather sunlight.
- With changes in the season, it may be necessary to adjust the solar panel for optimal charging during the day.

Troubleshooting

Problem	Possible Cause	Solution
The light will not turn ON at night, or the motion sensor appears not to detect motion.	The Power button is in the OFF position.	Make sure the Power button is in the ON position.
	The batteries may be depleted. This can occur if there are poor charging conditions, or if the product has been in use for more than a year.	Check the connection between the light unit and the solar panel. Make sure the solar panel is receiving an ample amount of sunlight on a daily basis. New Nickel-metal Hydride batteries can be purchased at The Home Depot.
		During long periods of cold weather, hazy or cloudy skies, the light can be connected to a mobile phone rechareable battery via the USB-C connector. The length of operation with a rechargeable battery is dependent on the amount of charge, type of battery, and ambient temperature.
	Extensions totaling more than 60 ft. have been installed between the light and the solar panel.	It is recommended that no more than two extension cords are added to the light system. Reconnect to a shorter extension cord, or reposition the solar panel closer to the light fixture, while using fewer cords.
	The solar panel is not positioned correctly or optimally.	Adjust the panel angle to face southward for sufficient and direct sunlight. The solar panel must face the southern sky, with clear exposure to the sun. If the panel cord is not long enough, an extension is available at HomeDepot.com.
	The motion sensor is not detecting motion.	Increase SENS, and turn LUX towards the moon icon. This makes the unit more sensitive to motion when it is dark.
	Light from the immediate environment (light poles, headlights, other floodlights) acts similar to daylight to the light sensor.	Turn the LUX setting towards the sun icon to compensate for the additional light, or move the light to another area.
	The surrounding air temperature is too hot (greater than 122°F (50°C)) or too cold less (than -4°F (-20°C)).	The light will operate normally when temperatures return within operational range. Placing the light in areas that are not directly exposed to extreme temperatures may extend operation time.

Troubleshooting (continue)

Problem	Possible Cause	Solution
Linked lights on a channel are not activating when one in the group is detecting motion.	Channel Dial is not set for one or more of the lights.	Check each light setting to insure they are all on the same channel.
	One or more of the linked lights do not have power.	Allow all the lights in a group to charge, preferably over the course of 2 days. Once charged, repeat the TEST mode process, switch to 'Motion', and attempt to activate all connected lights with one unit.
	One or more of the linked lights are not turned ON, or are in TEST mode.	Make sure the Power button is in the ON position, and the light(s) are in 'Motion' mode.
The RED indicator light flashes, but the light does not turn ON.	LUX is set too high; the light registers motion, but will not activate.	Refer to Reading the Indicator Light in the Operation section. Turn the LUX setting towards the moon icon.
The light turns ON during the day.	The light is mounted in a dark or shaded location. The LUX setting is too high.	Note: The light is NOT designed to turn ON in daylight. Refer to Reading the Indicator Light in the Operation section. Turn the LUX setting towards the moon icon.
The light appears dimmer than normal.	The rechargeable Nickel-metal Hydride batteries are low.	Allow the light to charge for 5 hours of continuous sunlight. If the light is consistently dim, and the unit has been in operation for over 1 year, new Ni-MH batteries may be needed.
The RED or GREEN indicator light is not ON or flashing.		See 'Operation #4' for an explanation of these indicator light colors.
The light is not detecting my pet (i.e., dog, cat, small animal.)		The motion sensor is not designed to register the IR motion of pets and small animals.

This page intentionally left blank.

This page intentionally left blank.

DEFIANT®

Questions, problems, missing parts? Before returning to the store,
call Defiant Customer Service
8 a.m. - 7 p.m., EST, Monday-Friday, 9 a.m. - 6 p.m., EST, Saturday

1-866-308-3976

HOMEDEPOT.COM

Retain this manual for future use.