Smart Landscape Camera

Installation and Use

For instructions in Spanish, please visit our website at www.shopNovolink.com. (You can also scan this QR code to go directly to the instructions page.)

Para obtener instrucciones en español, visite nuestro sitio web en www.shopNovolink.com. (También puede escanear este código QR para ir directamente a la página de instrucciones)

novolink Lightscape™

Safety Information

READ AND FOLLOW ALL SAFETY INSTRUCTIONS

For your protection and safety, carefully read and understand the information provided in this manual completely before attempting to assemble, install, or operate this product. Failure to do so could lead to electrical shock, fire, or other injuries that could be hazardous or even fatal.

1. Before touching any wire, use a voltage tester to make sure it is not live.
2. Use tools with insulated handles and ladders made of wood or fiberglass.
3. To protect children, place a safety cover over any unused outlets.
4. DO NOT submerse underwater.
5. Do not secure the wiring of the product with staples or nails, or place on sharp hooks or nails.
6. Install only using the mounting means provided.
7. Do not use this product for other than its intended use.
8. Do not cover the product with cloth, paper or any material not part of the product when in use.
9. SAVE THESE INSTRUCTIONS

CAUTION: CONSULT A QUALIFIED ELECTRICIAN IF YOU HAVE ANY ELECTRICAL QUESTIONS.

If you have any non-electrical questions about this fixture, please call our Customer Service at 1-800-933-7188 or visit www.shopNovolink.com. Please reference your Model (LS-101B-IPC).

WARNING: The wire connector (E) contacts have sharp edges for piercing the main low voltage cable. To avoid injury, do not touch the metal contacts.

CAUTION: The wire from low voltage power unit should be 12-16 AWG type underground low Energy Circuit Cable.

IMPORTANT:

- ☐ Protect the wiring by routing it in close proximity to the light fitting, or next to a building structure such as a house or a deck.
- ☐ The landscape wire and connector can also be hidden under stone or buried under grass at a maximum depth of 6 in. (15.24 cm).
- ☐ Do not install the fixture within 10 ft. of a pool, spa, or fountain.
- ☐ Do not submerge the fixture in water.

FCC Compliance

RF Exposure Warning Statements:

- This equipment complies with FCC radiation exposure limits set forth for an uncontrolled environment.
- This equipment shall be installed and operated with minimum distance 20cm between the radiator & body.

This equipment has been tested and found to comply with the limits for a Class B digital device, pursuant to part 15 of the FCC Rules. These limits are designed to provide reasonable protection against harmful interference in a residential installation. This equipment generates, uses, and can radiate radio frequency energy, and if not installed and used in accordance with instructions, may cause harmful interference to radio communications. However, there is no guarantee that interference will not occur in a particular installation. If this equipment does cause harmful interference to radio or television reception, which can be determined by turning the equipment off and on, the user is encouraged to try to correct the interference by one or more of the following measures:

- Reorient or relocate the receiving antenna
- Increase the separation between the equipment and receiver
- Connect the equipment into an outlet on a circuit different from that to which the receiver is connected
- Consult the dealer or an experienced radio / TV technician for help

Changes or modifications not expressly approved by the party responsible for compliance could void the user's authority to operate the equipment.

This device complies with part 15 of the FCC Rules. Operation is subject to the following two conditions: (1) This device may not cause harmful interference, and (2) this device must accept any interference received, including interference that may cause undesired operation.

Contents

The Smart Landscape Camera 2

Parts of the Camera 4

Download the Novolink LS App 6

Camera Installation 9

Pairing & Setup of the Camera 21

Using the Camera 24

Online Resources & Help 28

Warranty Information 29

The Novolink Smart Landscape Camera

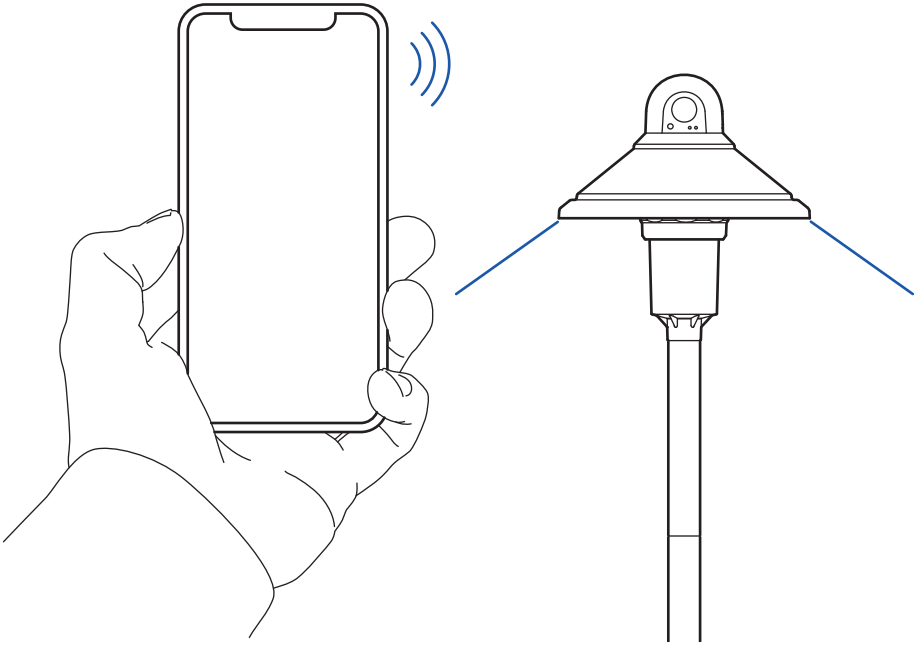

Novolink Lightscape™ Smart Landscape Camera gives you simple, motion activated, and wireless viewing of almost any outdoor space.

The camera can be placed outdoors anywhere you have low voltage lighting installed. If you do not, a 12V adapter is available (sold separately) that plugs into a GCFI outdoor socket (See page 29.)

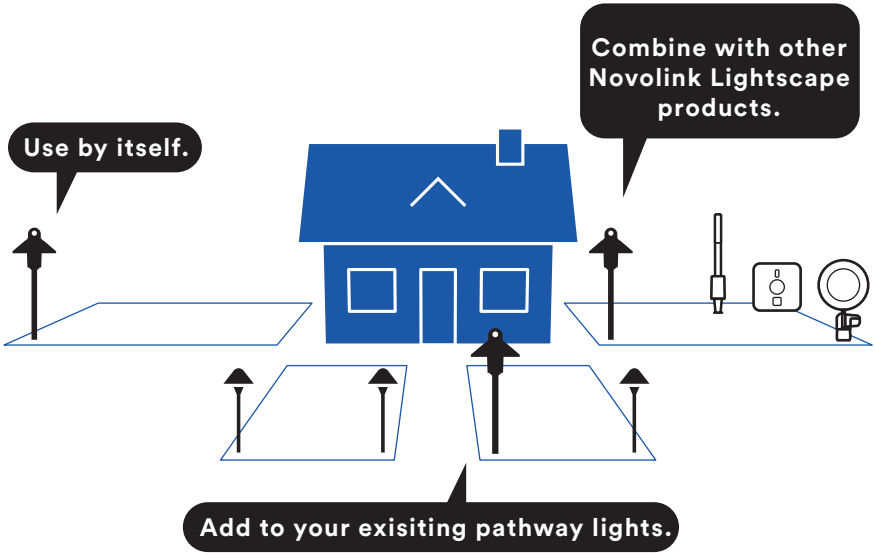

With the Landscape Camera in place, use our Novolink LS app for quickly set-up. It's as easy as pressing a button, and showing the camera your unique QR code.

Once you're connected, you'll be able to establish schedules for surveillance, motion sensitivity, video duration, etc. You'll be able to access the camera from anywhere you have WiFi connectivity, to see what's happening in your space, day or night.

The Landscape Camera can be used alone, along with your current low voltage pathway lights, and with other Novolink Lightscape™ products to add visibility and security to your home environment.

Parts of the Camera

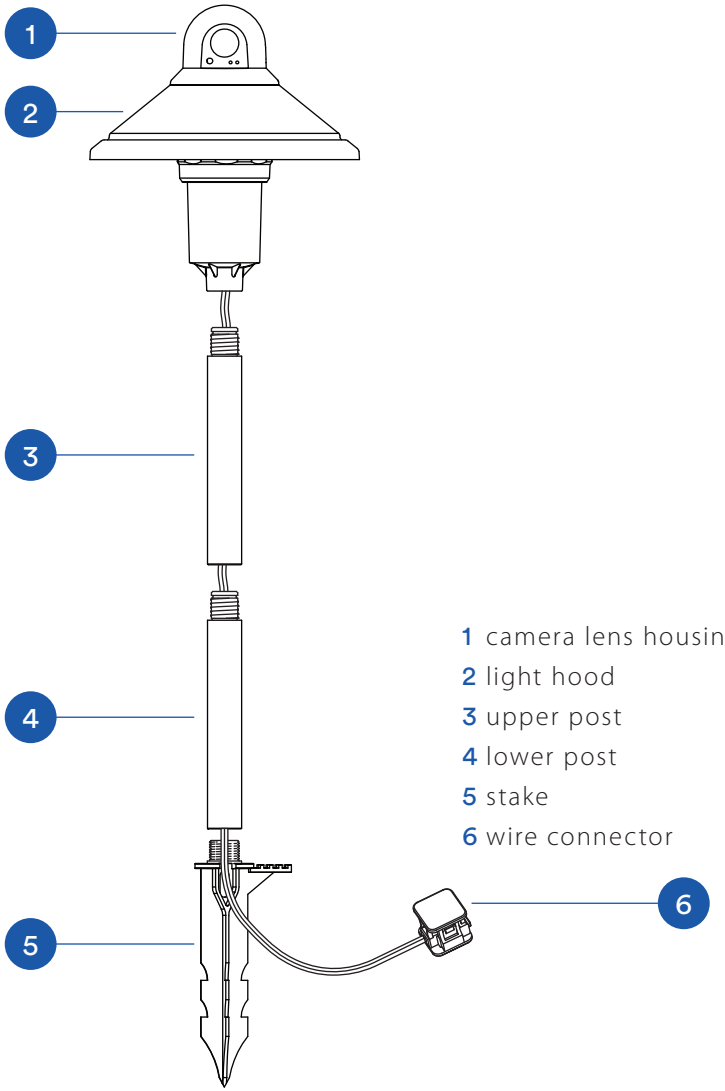

1 camera lens housing
2 light hood
3 upper post
4 lower post
5 stake
6 wire connector

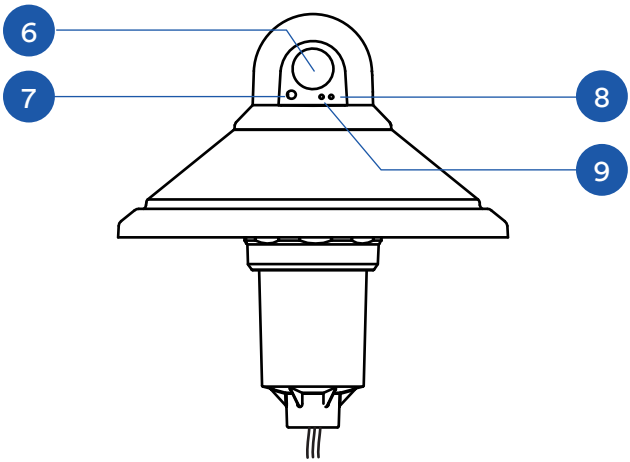

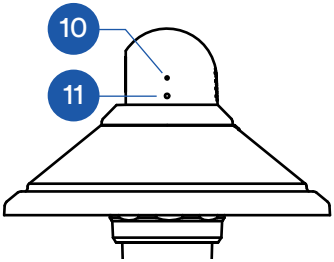

Right Side

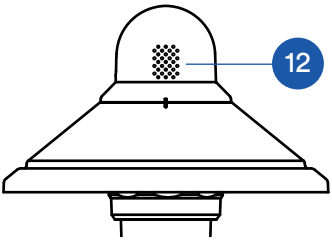

Back

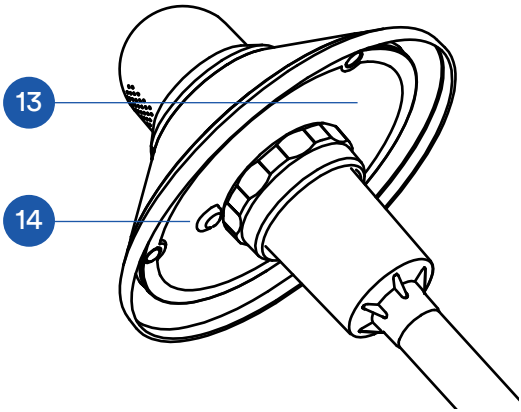

6 camera lens
7 IR sensor
8 status indicator light (blue or green)
9 internal battery indicator light (red)
10 microphone
11 reset button
12 speaker
13 led light diffuser
14 power button

Download the Novolink LS™ App

SCAN THIS CODE FOR DIRECTIONS ON DOWNLOADING THE APP.

1. Before you install the Landscape Camera, download the app from Google Play (Android) or from the App Store (iOS).

   The app requires a device with Bluetooth® wireless capability.

Use the app to:

- review video footage and photos
- check camera status and adjust settings
- use live features such as 'talk'
- adjust lighting temperature, brightness, and timers
- connect more equipment to your system
- test all connected equipment

...and much more

Compatibility:

- Android, version 9.0 or higher
- Apple iOS, version 12.0 or higher

2. The camera will only connect to 2.4GHz WiFi, and will not connect to 5G WiFi. It may be necessary to switch WiFi settings, or "split" the WiFi signal to use the 2.4GHz setting. (For more information, refer to your WiFi provider or hardware.)

3. Some devices may require you to turn ON 'Location Services'. You may find this in your device settings menu. (You can also search for the 'Location' setting in your device.)

4. Open the app, and follow the prompts to activate the camera.

Visit **www.shopNovolink.com** for up-to-date instructions and tips on how to use the app, and our FAQ based on real customer input.

Camera Installation

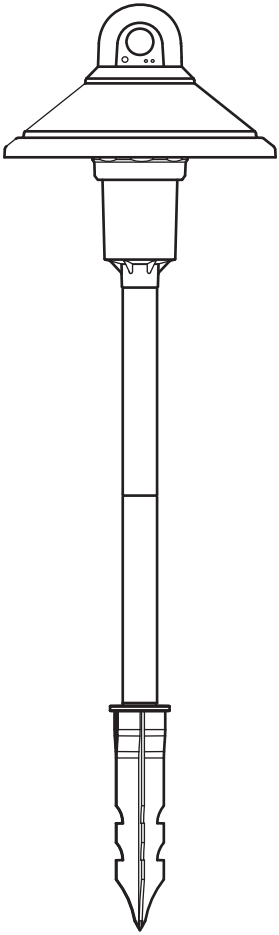

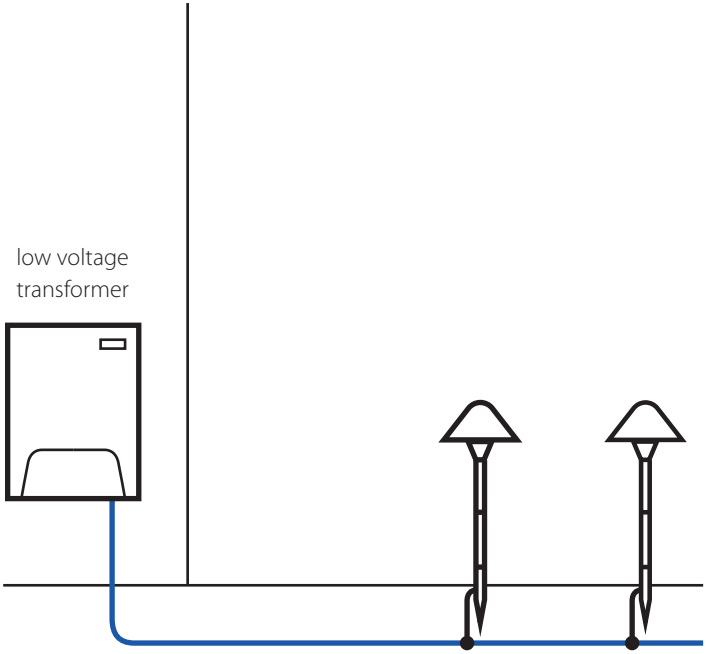

Electrical Warning:

When working with electrical wires of any voltage, exercise caution in moving, cutting, splicing, or connecting the wires.

It's best to disconnect any transformer or source of electricity before commencing installation.

Before You Start

To install the Camera, you'll need access to the low voltage wire that runs between the Transformer and your landscape lights.
This may require exposing the wire(s) if they're buried.

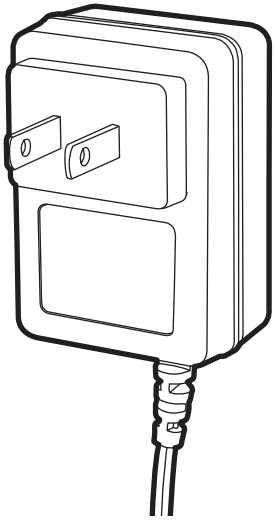

Note: If you plan to connect the camera to a 12V AC adapter, this step will not be necessary. Instead, follow the instructions included with the Novolink 12V AC adapter for the Landscape Camera. (See page 29 for more details.)

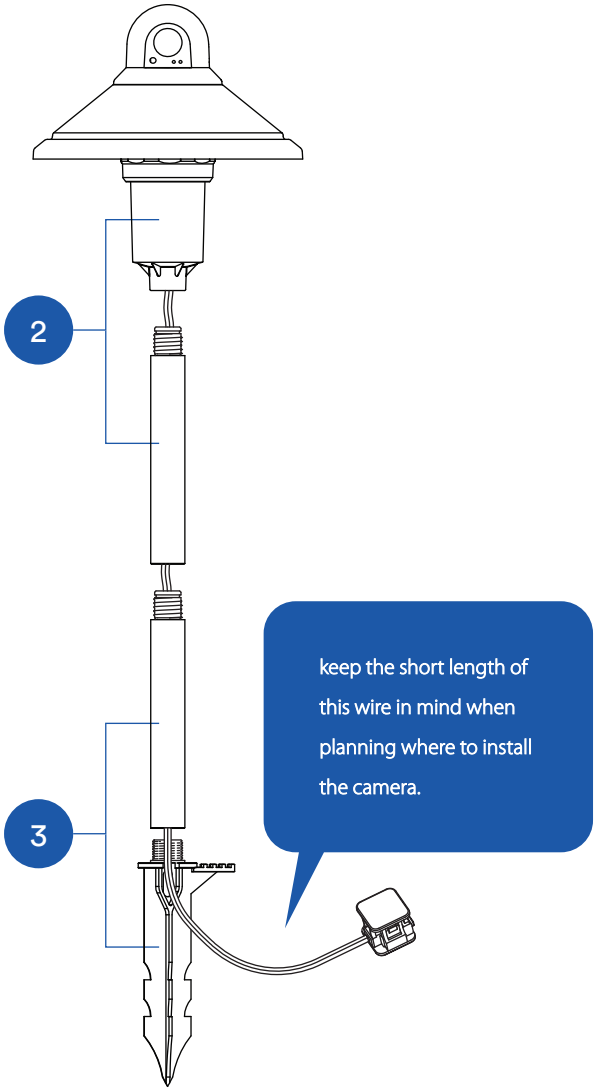
2
3
keep the short length of this wire in mind when planning where to install the camera.

Assembly

1. Make sure you have all parts of the camera. Check the mechanisms and wiring for damage. Set the parts on a clean, sturdy work-surface.

2. Attach the camera top to the uppermost post.

3. Then, attach the stake to the lower post. Twist until it's firmly in place.

4. Combine the top (2) portion with the lower (3) portion to complete the assembly.

Install the Camera

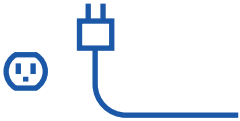

1. Unplug / disconnect your low voltage transformer. It's best to turn power OFF at the circuit breaker or fuse, and test that the power is OFF before proceeding.

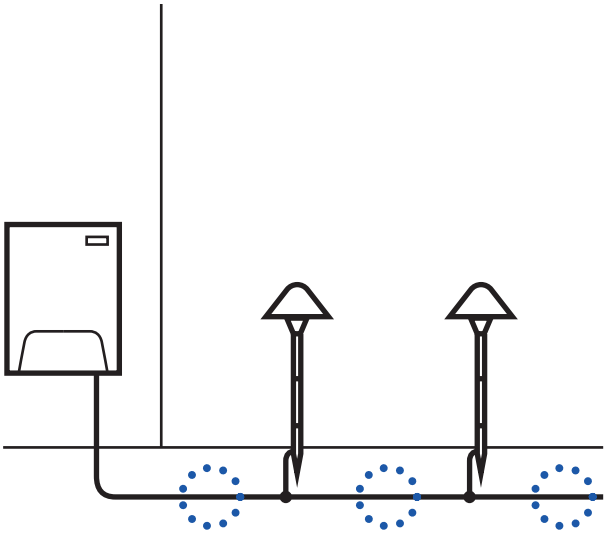

2. Choose a place along the low voltage wire in the lawn or landscaping where the camera's stake can be inserted into the ground nearby. Here, the camera will attach to the low voltage wire.

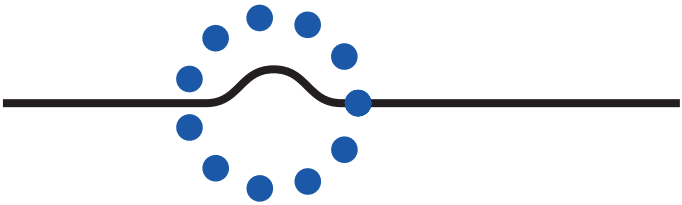

3. Unearth this portion of the low voltage wire. Make sure there's enough slack for it to be easily manipulated.

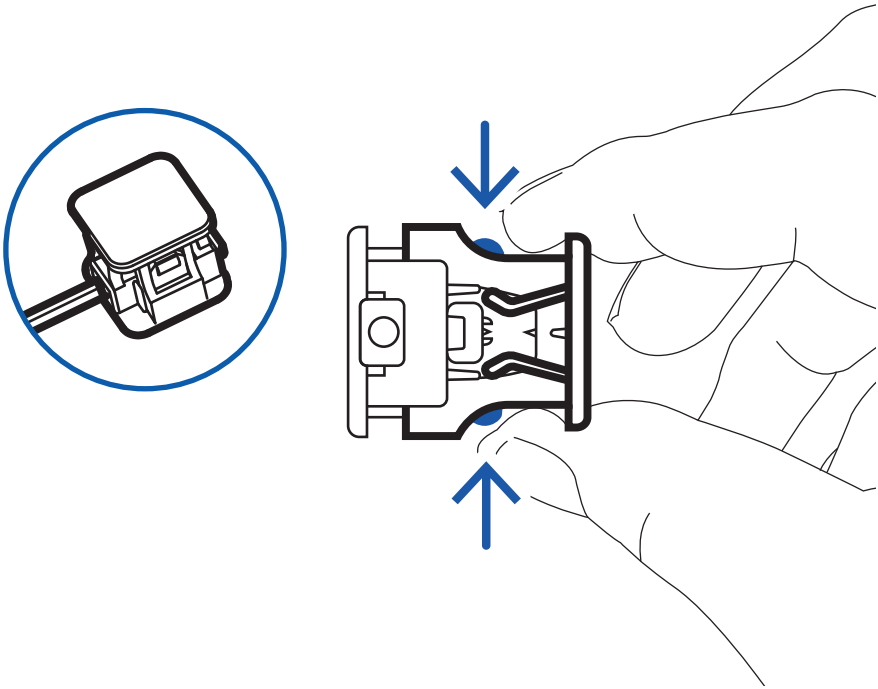

4. Remove the cap from the top of the Wire Connector. Pinch the tabs on both sides of the Connector, and pull the cap away from its base.

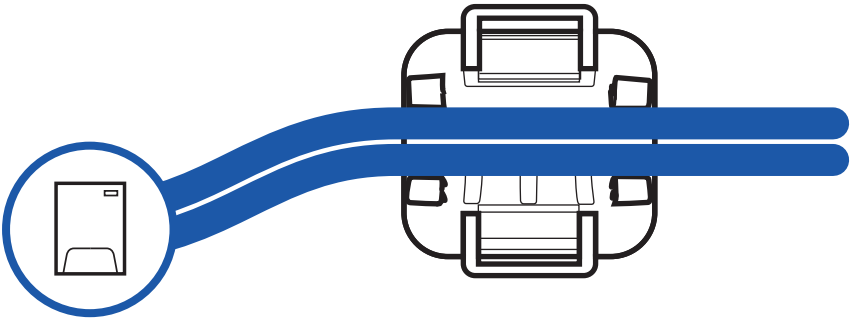

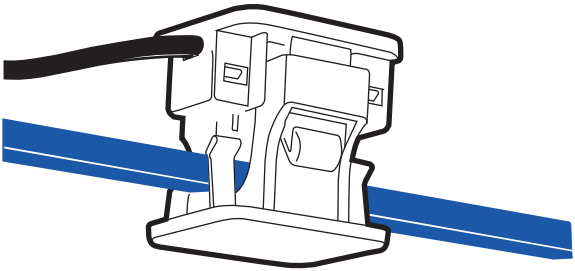

5. Place the low voltage wire into the upper cap of the Connector, flat against the channel running across the inside of the cap. Make sure the wire goes completely across the cap, and is aligned with the channel.

6. Replace the cap over the wire, ensuring that the wire remains flat in the cap channel.

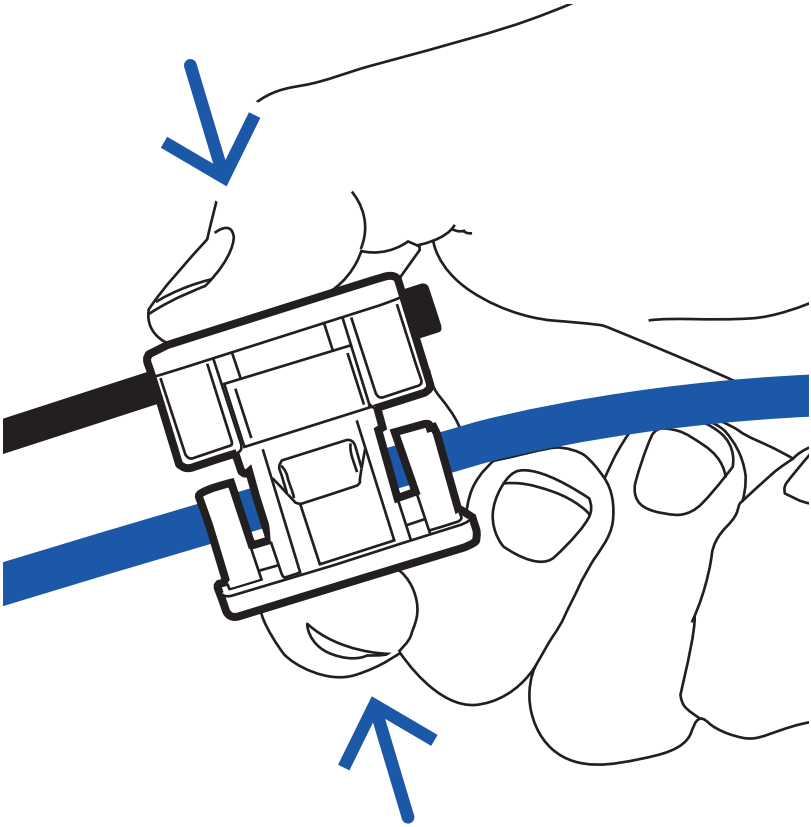

7. Press until the two parts clip and snap into position.

   Thicker wires may be difficult to secure, and a clamp or wrench may help squeeze or press the pieces into place. Do not use a hammer, as it may damage the components.

Complete the Installation

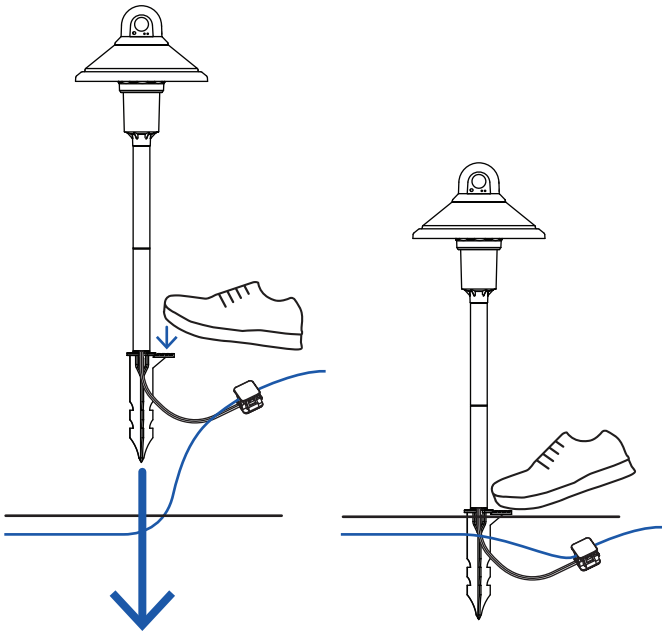

8. With the Connector attached to the low voltage wires, position the camera's stake where it will be installed. Loosely guide the top of the camera with the palm of your hand. Use your foot to push down the spike and drive it into the ground.

Note: DO NOT pull on the camera light hood while pushing the spike down, as this may damage the unit.

9. Once the camera is in place, the Connector and wiring should be hidden under a stone or burried under grass at a max. depth of 6in. (15.25cm)

Reconnect the Transformer

10. Turn the power ON at the circuit breaker or fuse, and / or plug your transformer in, and turn it ON.

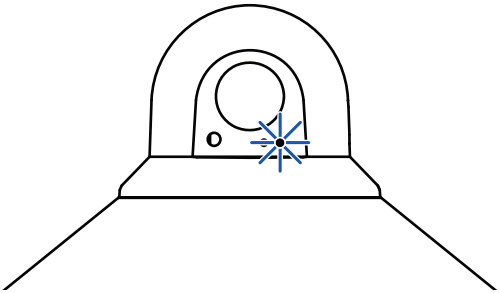

11. The Status Indicator light on the camera will show BLUE (at half brightness), indicating that the unit is receiving power. When the camera is ready to pair, the indicator light will turn GREEN and flash.

Note: The Battery Status light in RED may also illuminate, indicating that the onboard battery is charging.

Pairing & Setup of the Camera

Initial Setup

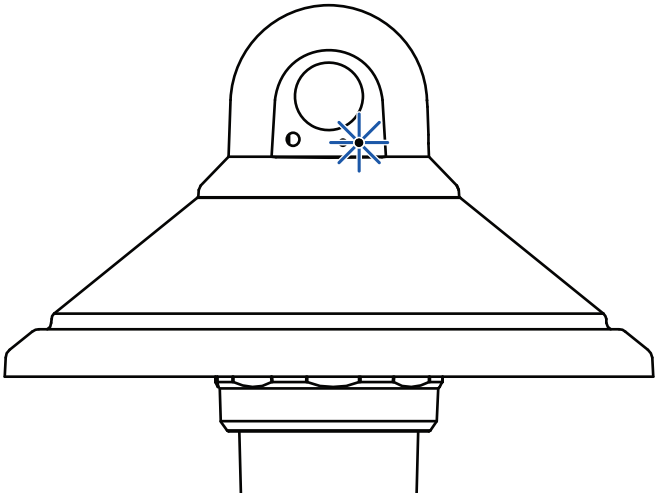

When the camera receives power for the first time, it will enter an initial setup mode.

1. The Status Indicator light will shine a steady BLUE momentarily, then switch to GREEN, and begin flashing.
2. The camera will chime, indicating that it is ready to be paired.

Scan the QR Code and Pair

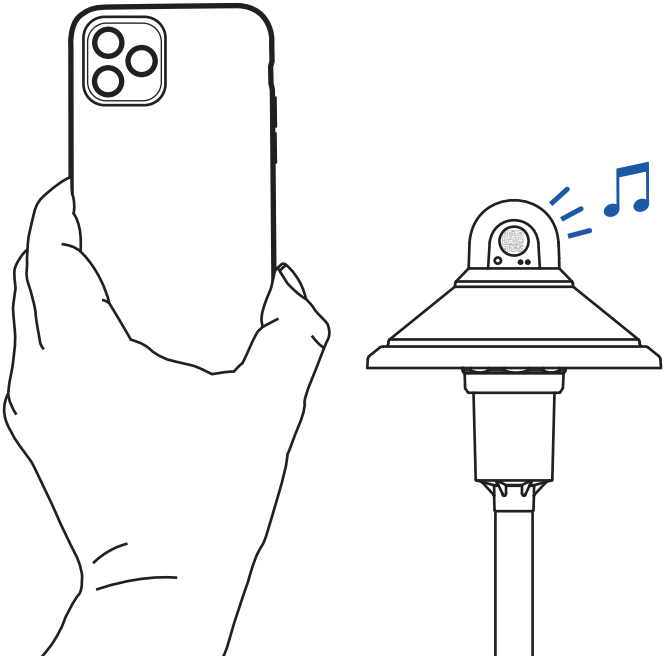

1. Go to your smart device or smartphone, and follow the prompts for setting up a wifi connection. You'll be asked to show a QR code to the camera, which will establish a connection between the two devices.

2. When the camera has read the QR code, it will chime, the Status light will switch back to BLUE, and flash as it is connecting to your network.

3. When the connection is successful, the Status light will shine a steady BLUE.

4. You can now use the Novolink LS app to set and operate the camera.

Activate the Camera

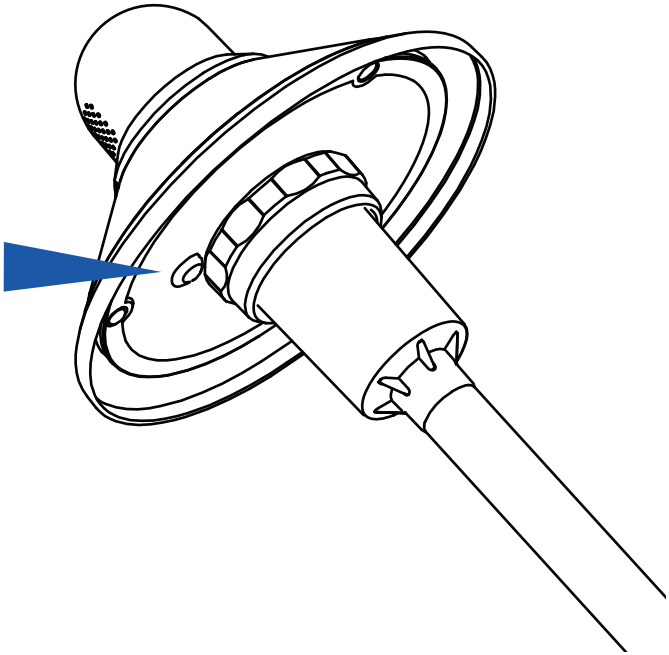

Press the button below the light hood of the camera to activate.

The Landscape Camera is equipped with an onboard recharging battery that enables operation when the unit is not powered by a low voltage source.

Once the Landscape Camera receives power for the first time, it may begin to charge the onboard battery, and the RED internal battery indicator light will appear.

(If the RED indicator light is not visible, but the unit is otherwise operational, the battery is fully charged.)

Using the Camera

Normal Operation

Once the Landscape Camera is paired with your device, you'll be able to adjust functionality using the Novolink LS app.

Here are a few notes on normal operation:

1. When activated and set, the Camera will record video and photos based on the settings in the Novolink LS app.

2. The camera will be triggered by motion within 32 feet, and at about a 100º horizontal arc in of the front the of the camera lens.

Power Consumption during the Day and Night

Where possible, schedule the low voltage transformer to power ON at least 8.5 hours per day. This will keep the onboard battery for the camera charged.

Daytime Operation

- During the day, or when the transformer is OFF/disconnected, the camera will use an internal battery that can keep it operating for up to 15.5 cumulative hours.
- Once the battery is depleted, the camera will stop operating.

Night-time Operation

- When the connected transformer is ON (ie. when landscape lights are scheduled ON) the camera will be directly powered.
- If the transformer is OFF (ie., landscape lights are OFF) the camera will use the onboard battery for power. (The LED lantern can be turned OFF to conserve power.)
- The camera may record using infrared light if there is no regular ambient light available. This will result in footage that appears predominantly black and white, normal for this type of recording.

Indicator Lights and Sounds

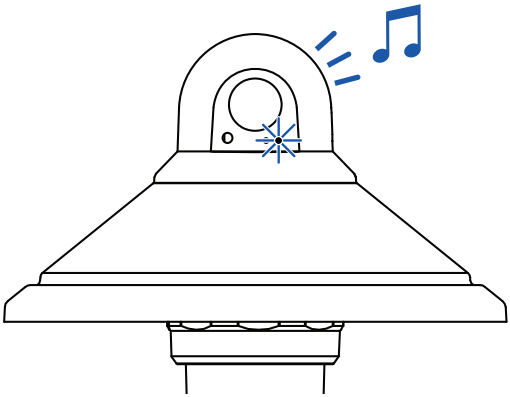

Indicator lights and chimes communicate the hardware status of the camera.

- BLUE (at half-brightness), Constant: Camera is receiving power and operating normally.
- BLUE, Flashing Fast: Camera is disconnected from the network.
- BLUE, Flashing with Chime: Camera is connecting to network.
- GREEN, Flashing: Camera is standing by to be paired.

The RED indicator light shows the charging status of the internal battery.

- RED light is ON: The internal battery is charging.
- RED light is OFF: Charging is finished, and the battery has its maximum charge.

Resetting the Camera

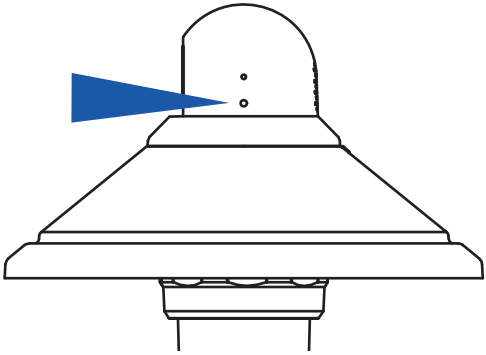

If the camera will not connect to the network, is not responding to the Novolink LS app, or is being moved to another network, it may need to be reset:

1. Locate the “Reset” button on side of the camera lens housing.

2. Using a thin flat-headed tool, press the Reset button and hold until 3 chimes can be heard. Then release the button.

3. The indicator light will flash GREEN momentarily, then turn OFF.

4. Next, the indicator will show a constant, bright BLUE for about 20 seconds. It will then flash once, and change to GREEN and chime 3 times.

5. The indicator light will flash GREEN, and is now ready for pairing (see page 22.)

Additional Resources & Accessories

Visit **www.shopNovolink.com** for more information about the Novolink Lightscape™ system including tips, installation videos, and news on the latest ways to expand your system.

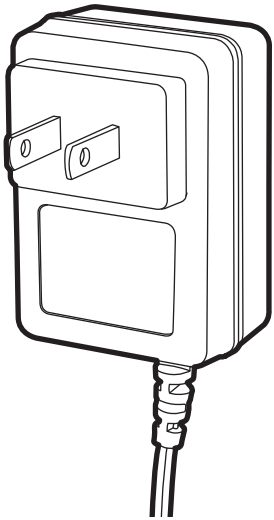

If you would like to purchase a 12V AC adapter, visit shopNovolink.com (or scan this QR code with your smartphone to be taken directly to the page.)

Visit **homedepot.com** or **shopnovolink.com** to purchase more Novolink Lightscape™ components or replacement parts.

2-Year Limited Warranty

WHAT IS COVERED

Novolink, Inc. warrants the Smart Landscape Camera (the "Device", provided that "Device" does not include accessories) is guaranteed to be free of factory defective parts and workmanship for a period of 2 years from date of purchase. This warranty applies only to the original consumer purchaser and only to the Device used in normal use and service. **Purchase receipt is required for all warranty claims.**

WHAT IS NOT COVERED

This guarantee does not include repair service, adjustment and calibration due to misuse, abuse or negligence. Unauthorized service or modification of the Device or of any furnished component will void this warranty in its entirety. This warranty does not include reimbursement for inconvenience, installation, setup time, loss of use, unauthorized service, or return shipping charges. This warranty is not extended to other equipment and components that a customer uses in conjunction with this Device, including batteries, LED bulbs, low voltage wiring and accessories.

If this Device is found to be defective, the manufacturer's only obligation, and your exclusive remedy, is the repair or replacement of the Device at the manufacturer's discretion, provided that the product has not been damaged through misuse, abuse, accident, modifications, alteration, neglect, or mishandling.

INSTRUCTIONS

For specific instructions about how to obtain warranty service for your Device, please contact Customer Service using the contact information below, or at www.shopNovolink.com. In general, you will need to deliver your Device in either its original packaging or in equally protective packaging to the address specified by Customer Service. Before you deliver your Device for warranty service, it is your responsibility to back up any data, software, or other materials you may have stored using your Device. It is possible that such data, software or other materials will be lost during service, and we will not be responsible for any such damage or loss.

Contact the Customer Service Team at 1-800-933-7188
or visit www.shopNovolink.com.

The Bluetooth® word mark and logos are registered trademarks owned by Bluetooth SIG, Inc. and any use of such marks by Novolink, Inc. is under license. Other trademarks and trade names are those of their respective owners.