H F RoHS

REVISIONS					
REV.	ECN NO.	DESCRIPTION	DESIGN	APPROVAL	DATE
A1	500000197322	正式图纸	Jenson	Victor	12/29'21
A2	500000221841	修改背胶尺寸	Jenson	Victor	03/11'22
A3	500000227670	修改线长	Jenson	Victor	03/25'22

2.備註 Note:

2.1The inductance is 6.3uH ± 10% (100KHZ / 1 v);电感为6.3±10%uH （100KHZ/1V

2.2 The DCR is 40.0mΩ MAX（25℃）; DCR为40.0 mΩ MAX（25℃）

2.3 The AC resistance is 45.0mΩ MAX（25℃）; ACR为45.0 mΩ MAX（25℃）

2.4 Materials meet the RoHS and Reach standard（材料符合RoHS 和 Reach 标准）

3.材料清單 Raw material:

No.	材料 Material	規格型號 DescriptionPart No.	供應商1 Supplier1	供應商2 Supplier2	供 Method
1	絲包多股線 Enamelled with silk multi-wire	SLUSTC 2UEW/155 S (R20.5*0.08*105P*10TS)	BTA-005		self-
2	無鉛錫 Lead-free tin	M20E Sn99.3Cu0.7	BTB-330		self-
3	磁片	TPW33Φ50.0*1.0MM 开直槽双面覆膜	BTB-346		self-
4	双面胶	Φ49.5*Φ36.0mm3M9448A Φ42.5*Φ21.5mm3M9448A(开槽)	BTB-345		self-
5	泡棉	029-0000-0644 (1.5CR4050+日东5000NS)	BTB-326		self-
6	NTC	MF52B-104F3950FAL58	BTB-326		self-
7	胶带	5mm宽美纹胶带	BTB-345		self-

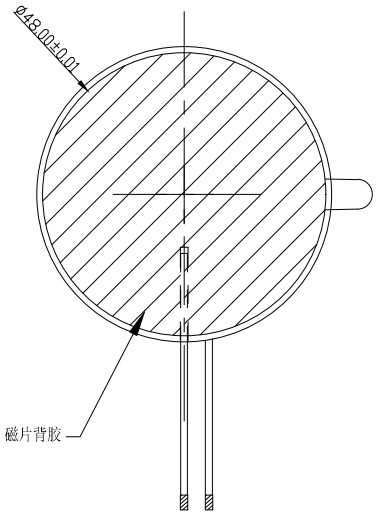

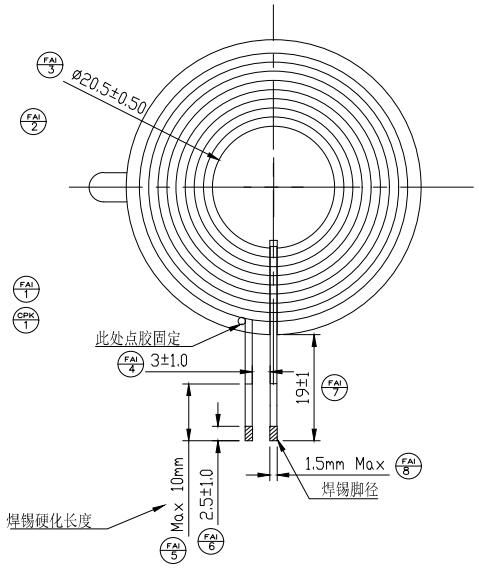

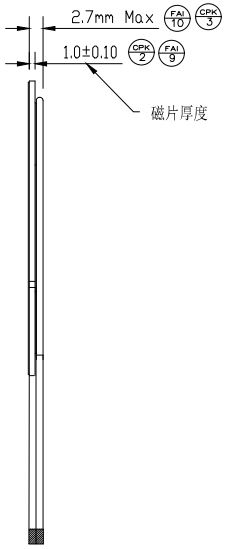

NOTE: UNLESS OTHERWISE SPECIFIED

1. 磁材采用Mn-Zn，双面覆膜；
2. 双面胶阻燃等级要求94V-2以上，且无卤；
3. 满足无铅，无卤要求；
4. DIMENSION SHALL BE INTERPRETED PER ANSI Y14.5M-1994.
   尺寸标注符合标准Y14.5M-1994，所述含义请参考此标准。
5. SURFACE PROFILE TOLERANCE OF ⌓ 0.1 X Y Z .
   除非图面另外定义，否则所有面的轮廓度公差为: ⌓ 0.1 X Y Z 。
6. ALL DIMENSIONS APPLY AFTER PART HAS BEEN PLATED.
   图面所有标注尺寸均为表面处理后的尺寸。
7. PACKAGING COMPLY TO PACKAGE SPEC:TBD
   包装方式需符合包规：TBD 所定义包装方式。
8. DIMENSIONS MARKED WITH FAI * SHOULD HAVE INCOMING INSPECTION BY IQC.
   标注 FAI * 的尺寸在每次进料时需做进料检验。
   DIMENSIONS MARKED WITH SPC * DENOTE THAT CPK IS NEEDED.
   标注 SPC * 的尺寸表示需要做CPK测量。

X.± 0.30	X.°±1
.X± 0.20	.X°±
.XX± 0.10	.XX°±
.XXX±	.XXX°±
UNITS:	mm

THESE DRAWINGS AND SPECIFICATIONS ARE THE PROPERTY OF LUXSHARE-ICT AND SHALL NOT BE REPRODUCED, COPIED OR CUED IN ANY MANNER WITHOUT THE PRIOR WRITTEN CONSENT OF LUXSHARE-ICT

PART NO.: 13705-T0T0013H-00

TITLE: WL1173-COIL-华源

APPD: Victor 03/25'22

CHKD: Martin 03/25'22

DRAW: Jenson 03/25'22

LUXSHARE-ICT

CUSTOMER P/N:

DWG NO: 13705-00000000-00

SCALE	SHEET	REV.
1:1	1/1	A3