User Guide

Yoga AIO 9 32IRH8

Read this first

Before using this documentation and the product it supports, ensure that you read and understand the following:

- *Safety and Warranty Guide*
- *Generic Safety and Compliance Notices*
- *Setup Guide*

First Edition (April 2023)

© Copyright Lenovo 2023.

LIMITED AND RESTRICTED RIGHTS NOTICE: If data or software is delivered pursuant to a General Services Administration “GSA” contract, use, reproduction, or disclosure is subject to restrictions set forth in Contract No. GS-35F-05925.

Contents

About this documentation iii

Chapter 1. Meet your computer 1

Front 1
Base 2
Rear 3
Features and specifications 4
USB specifications 4
Operating environment 6

Chapter 2. Get started with your computer 7

Work with Windows 7
Windows help information 7
Connect an external display 8

Chapter 3. Explore your computer . . . 9

Adjust the computer stand 9
Lenovo Vantage. 9
Set the power plan 10
Purchase accessories 10

Chapter 4. CRU replacement 13

CRU list 13
Remove or replace a CRU 13

Chapter 5. Help and support 15

Frequently asked questions 15
Self-help resources 15
Call Lenovo 17
Before you contact Lenovo 17
Lenovo Customer Support Center 17
Purchase additional services. 18

Appendix A. Notices and Trademarks . . 19

© Copyright Lenovo 2023

About this documentation

- This guide applies to the Lenovo product models listed below. Illustrations in this guide may look slightly different from your product model.

Model name	Machine types (MT)
Yoga AIO 9 32IRH8	F0HJ, F0HH

- For further compliance information, refer to the *Generic Safety and Compliance Notices* at https://pcsupport.lenovo.com/docs/generic_notices.
- Depending on the model, some optional accessories, features, and software programs might not be available on your computer.
- Depending on the version of the operating systems and programs, some user interface instructions might not be applicable to your computer.
- Documentation content is subject to change without notice. Lenovo makes constant improvements to the documentation of your computer, including this *User Guide*. To get the latest documentation, go to https://pcsupport.lenovo.com.
- Microsoft® makes periodic feature changes to the Windows® operating system through Windows Update. As a result, some information in this documentation might become outdated. Refer to Microsoft resources for the latest information.

© Copyright Lenovo 2023

Chapter 1. Meet your computer

Front

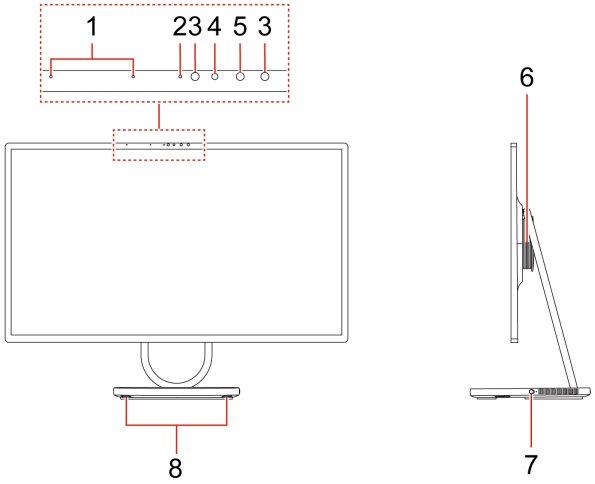

Item	Description	Item	Description
1	Microphones	2	Integrated camera light
3	IR LED	4	Integrated camera
5	Infrared camera	6	Woofer
7	Camera switch	8	Speakers

© Copyright Lenovo 2023

Base

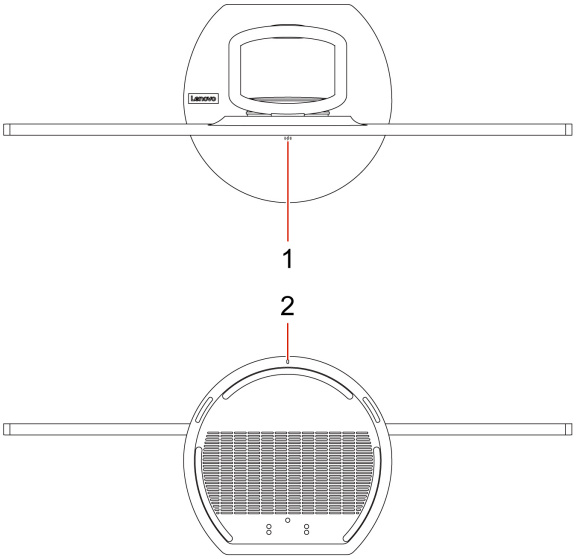

Item	Description	Item	Description
1	Wireless charging pad *	2	Wireless charging light *

* for selected models

Rear

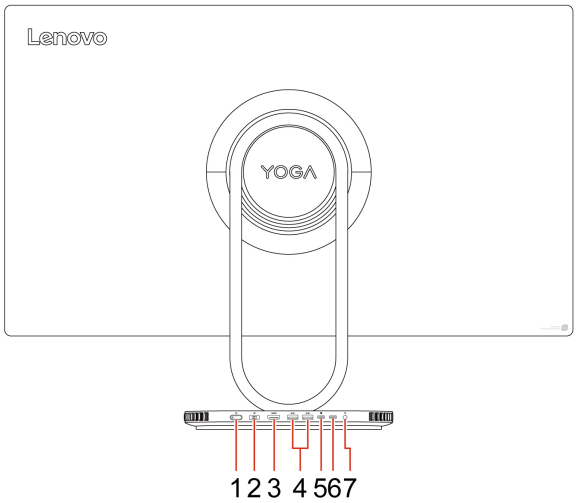

Item	Description	Item	Description
1	Power button	2	Power cord connector
3	HDMI™ 2.1 out connector	4	USB 3.2 connectors Gen 2 (2)
5	USB-C® connector (support DisplayPort-in)	6	USB-C connector
7	Combo audio jack		

Power indicator

Show the system status of your computer.

- **Blinking for three times:** The computer is initially connected to power.
- **On:** The computer is on.
- **Off:** The computer is off or in hibernation mode.
- **Blinking rapidly:** The computer is entering sleep or hibernation mode.
- **Blinking slowly:** The computer is in sleep mode.

Related topics

- “Connect an external display” on page 8.
- “USB specifications” on page 4.

Features and specifications

Hardware	To view the hardware information of your computer, type device manager in the Windows search box and then press Enter.
Power supply	• 170-watt automatic voltage-sensing power supply • 300-watt automatic voltage-sensing power supply
Microprocessor	To view the microprocessor information of your computer, type system information in the Windows search box and then press Enter.
Memory	Low power double data rate 5 (LPDDR5)
Storage device	To view the storage drive capacity of your computer, type disk management in the Windows search box and then press Enter. **Note:** The storage drive capacity indicated by the system is less than the nominal capacity.
Expansion	• M.2 solid-state drive slot * • PCI Express slots

* for selected models

USB specifications

Note: Depending on the model, some USB connectors might not be available on your computer.

Connector name	Description
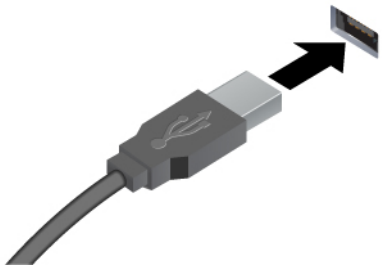 • USB 2.0 connector • USB 3.2 connector Gen 1 • USB 3.2 connector Gen 2	Connect USB-compatible devices, such as a USB keyboard, USB mouse, USB storage device, or USB printer.
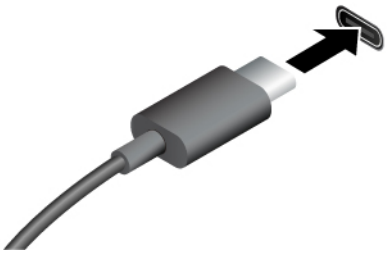 • USB-C (3.2 Gen 1) connector • USB-C (3.2 Gen 2) connector • Thunderbolt 3 connector (USB-C) • Thunderbolt 4 connector (USB-C)	• Charge USB-C compatible devices with the output voltage and current of 5 V and 3 A. • Connect to an external display: – USB-C to VGA: 1900 x 1200 pixels, 60 Hz – USB-C to DP: 3840 x 2160 pixels, 60 Hz • Connect to USB-C accessories to help expand your computer functionality. To purchase USB-C accessories, go to https://www.lenovo.com/accessories.

Statement on USB transfer rate

Depending on many factors such as the processing capability of the host and peripheral devices, file attributes, and other factors related to system configuration and operating environments, the actual transfer rate using the various USB connectors on this device will vary and will be slower than the data rate listed below for each corresponding device.

USB device	Data rate (Gbit/s)
3.2 Gen 1 / 3.1 Gen 1	5
3.2 Gen 2 / 3.1 Gen 2	10
3.2 Gen 2 × 2	20
Thunderbolt 3 (USB-C)	40
Thunderbolt 4 (USB-C)	40

Operating environment

Temperature

- Operating: From 5°C (41°F) to 35°C (95°F)
- Storage or transportation:
  - For common desktop computers: From -40°C (-40°F) to 60°C (140°F)
  - For all-in-one desktop computers: From -20°C (-4°F) to 60°C (140°F)

Relative humidity

- Operating: 20%-80% (non-condensing)
- Storage: 10%–90% (non-condensing)

Altitude

- Operating: -15.2 m (-50 ft) to 3048 m (10,000 ft)
- Storage: -15.2 m (-50 ft) to 12192m (40,000 ft)

Chapter 2. Get started with your computer

Work with Windows

The following table contains Windows frequently used settings. You can learn the basics and start working with Windows right away.

To configure settings, type the corresponding keywords in the Windows search box and select the best match. Follow the on-screen instructions to customize settings.

Table 1. Basic settings

Functions	Descriptions	Search by keywords
Control Panel	View or change Windows settings, including hardware and software setup and configuration.	Control Panel
Airplane mode	Airplane mode is a convenient setting to turn all wireless communications of your computer on and off. You may need to turn it on when boarding an airplane.	Airplane mode
Night light mode	Night light is a switch in Windows that you can turn on and off. When it is turned on, your screen shows warmer colors and the amount of emitted blue light is reduced. Enabling night light reduces the chances of developing eye fatigue or eye strain. **Note:** For more guidance on reducing eye fatigue or eye strain, go to https://www.lenovo.com/us/en/compliance/visual-fatigue.	Night light
Adjust color temperature	If night light mode is turned on, you can adjust the color temperature of the screen. **Note:** Selected Lenovo computers are low blue light certified using night light mode and color temperature settings available in the pre-installed operating system. These computers are tested with night light turned on and color temperature set to 48 or greater.	Night light
Windows Updates	Microsoft periodically releases feature and security updates to the Windows operating system. Updates that are applicable to your Windows version are downloaded automatically when your computer is connected to the Internet. When updates are downloaded, you are prompted to restart the computer to install these updates. You can also manually check if there are available updates for the installed version of Windows. **Attention:** Only use Windows Update to download and install updates. Updates downloaded from other sources may include security risks.	Windows Updates

Windows help information

If the on-screen instructions cannot solve your problem, refer to the following to get the online Windows help information.

© Copyright Lenovo 2023

- Type Get Help or Tips in the Windows search box and then press Enter. When the app opens, type the problem description and select the matched result.
- Visit Microsoft support Web site: https://support.microsoft.com. Enter what you are looking for in the search box and get search results.

Connect an external display

Connect a projector or a monitor to your computer to give presentations or expand your workspace.

Connect a wireless display

Ensure that both your computer and the wireless display support Miracast®.

Press the **Windows** and **K** Keys, and then select a wireless display to connect.

Change display settings

To change display settings, type display settings in the Windows search box and then press Enter.

Chapter 3. Explore your computer

Adjust the computer stand

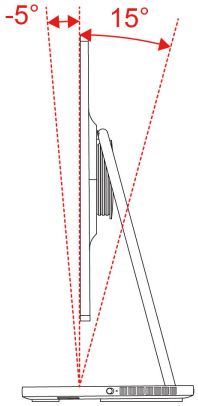

Lenovo Vantage

The preinstalled Lenovo Vantage is a customized one-stop solution to help you maintain your computer with automated updates and fixes, configure hardware settings, and get personalized support.

Access Lenovo Vantage

Type Lenovo Vantage in the search box and then press Enter.

To download the latest version of Lenovo Vantage, go to Microsoft Store and search by the app name.

Key features

Lenovo Vantage enables you to:

- Know the device status easily and customize device settings.
- Download and install UEFI BIOS, firmware and driver updates to keep your computer up-to-date.
- Monitor your computer health, and secure your computer against outside threats.
- Scan your computer hardware and diagnose hardware problems.
- Look up warranty status (online).
- Access *User Guide* and helpful articles.

Notes:

- The available features vary depending on the computer model.
- Lenovo Vantage makes periodic updates of the features to keep improving your experience with your computer. The description of features might be different from that on your actual user interface.

© Copyright Lenovo 2023

Set the power plan

For ENERGY STAR® compliant computers, the following power plan takes effect when your computers have been idle for a specified duration:

- turn off the display: After 10 minutes
- put the computer to sleep: After 10 minutes

To awaken the computer from Sleep mode, press any key on your keyboard.

To change or customize a power plan:

1. Type power plan in the Windows search box and then press Enter.
2. Customize a power plan of your preference.

Purchase accessories

Lenovo has a number of hardware accessories and upgrades to help expand the capabilities of your computer. Options include memory modules, storage devices, power adapters, keyboards, mice, and more.

To shop at Lenovo, go to
https://pcsupport.lenovo.com/warrantyupgrade.

Chapter 4. CRU replacement

Customer Replaceable Units (CRUs) are parts that can be replaced by the customer. Lenovo computers contain the following types of CRUs:

- **Self-service CRUs:** Refer to parts that can be replaced easily by customer themselves or by trained service technicians at an additional cost.
- **Optional-service CRUs:** Refer to parts that can be replaced by customers with a greater skill level. Trained service technicians can also provide service to replace the parts under the type of warranty designated for the customer's machine.

If you intend on installing the CRU, Lenovo will ship the CRU to you. CRU information and replacement instructions are shipped with your product and are available from Lenovo at any time upon request. You might be required to return the defective part that is replaced by the CRU. When return is required: (1) return instructions, a prepaid shipping label, and a container will be included with the replacement CRU; and (2) you might be charged for the replacement CRU if Lenovo does not receive the defective CRU within thirty (30) days of your receipt of the replacement CRU. For full details, see the Lenovo Limited Warranty documentation at:
https://www.lenovo.com/warranty/llw_02

CRU list

The following is the CRU list of your computer.

Self-service CRUs

- ac power adapter
- Power cord
- Mouse
- Keyboard

Remove or replace a CRU

This section provides instructions on how to remove or replace a CRU.

© Copyright Lenovo 2023

Chapter 5. Help and support

Frequently asked questions

How do I partition my storage drive?	Refer to https://support.lenovo.com/solutions/ht503851
What should I do if my computer stops responding.	Press and hold the power button until the computer turns off. Then restart the computer.
What should I do if I spill liquid on the computer?	1. Carefully unplug the ac power adapter and turn off the computer immediately. The more quickly you stop the current from passing through the computer the more likely you will reduce damage from short circuits. **Attention:** Although you might lose some data or work by turning off the computer immediately, leaving the computer on might make your computer unusable. 2. Wait until you are certain that all the liquid is dry before turning on your computer. **CAUTION:** **Do not try to drain out the liquid by turning over the computer. If your computer has keyboard drainage holes on the bottom, the liquid will be drained out through the holes.**
Where can I get the latest device drivers and UEFI/BIOS?	• Lenovo Vantage or Lenovo PC Manager • Lenovo Support Web site at https://support.lenovo.com

Self-help resources

Use the following self-help resources to learn more about the computer and troubleshoot problems.

Resources	How to access?
Troubleshooting and frequently asked questions	• https://www.lenovo.com/tips • https://forums.lenovo.com
Accessibility information	https://www.lenovo.com/accessibility
Reset or restore Windows	• Use Lenovo recovery options. 1. Go to https://support.lenovo.com/HowToCreateLenovoRecovery. 2. Follow the on-screen instructions. • Use Windows recovery options. 1. Go to https://pcsupport.lenovo.com. 2. Detect your computer or manually select your computer model. 3. Click **Diagnostics → Operating System Diagnostics** and then follow the on-screen instructions.

© Copyright Lenovo 2023

Resources	How to access?
Use Lenovo Vantage to: • Configure device settings. • Download and install UEFI BIOS, drivers and firmware updates. • Secure you computer from outside threats. • Diagnose hardware problems. • Check the computer warranty status. • Access *User Guide* and helpful articles.	Type Lenovo Vantage in the search box and then press Enter.
Product documentation: • *Generic Safety and Compliance Notices* • *Safety and Warranty Guide* • *Setup Guide* • This *User Guide* • *Regulatory Notice*	Go to https://pcsupport.lenovo.com. Then, follow the on-screen instructions to filter out the documentation you want.
Lenovo Support Web site with the latest support information of the following: • Drivers and software • Diagnostic solutions • Product and service warranty • Product and parts details • Knowledge base and frequently asked questions	Go to https://support.lenovo.com.
Windows help information	• Use **Get Help** or **Tips**. • Use Windows Search or the Cortana® personal assistant. • Go to Microsoft support Web site: https://support.microsoft.com.

Call Lenovo

If you have tried to correct the problem yourself and still need help, you can call Lenovo Customer Support Center.

Before you contact Lenovo

Prepare the following before you contact Lenovo:

1. Record the problem symptoms and details:
   - What is the problem? Is it continuous or intermittent?
   - Any error message or error code?
   - What operating system are you using? Which version?
   - Which software applications were running at the time of the problem?
   - Can the problem be reproduced? If so, how?
2. Record the system information:
   - Product name
   - Machine type and serial number

     The following illustration shows where to find the machine type and serial number of your computer.

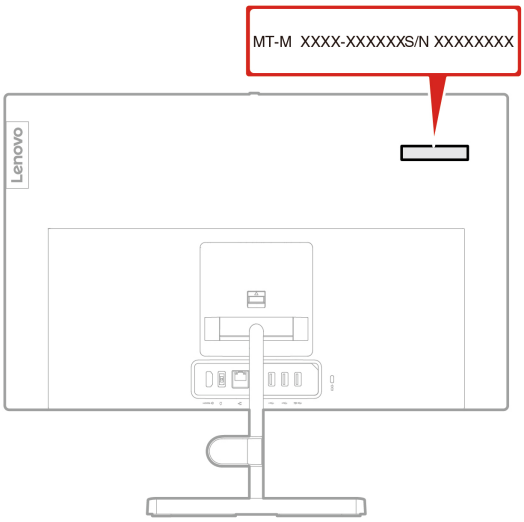

Lenovo Customer Support Center

During the warranty period, you can call Lenovo Customer Support Center for help.

Telephone numbers

For a list of the Lenovo Support phone numbers for your country or region, go to: https://pcsupport.lenovo.com/supportphonelist.

Note: Phone numbers are subject to change without notice. If the number for your country or region is not provided, contact your Lenovo reseller or Lenovo marketing representative.

Services available during the warranty period

- Problem determination - Trained personnel are available to assist you with determining if you have a hardware problem and deciding what action is necessary to fix the problem.
- Lenovo hardware repair - If the problem is determined to be caused by Lenovo hardware under warranty, trained service personnel are available to provide the applicable level of service.
- Engineering change management - Occasionally, there might be changes that are required after a product has been sold. Lenovo or your reseller, if authorized by Lenovo, will make selected Engineering Changes (ECs) that apply to your hardware available.

Services not covered

- Replacement or use of parts not manufactured for or by Lenovo or nonwarranted parts
- Identification of software problem sources
- Configuration of UEFI BIOS as part of an installation or upgrade
- Changes, modifications, or upgrades to device drivers
- Installation and maintenance of network operating systems (NOS)
- Installation and maintenance of programs

For the terms and conditions of the Lenovo Limited Warranty that apply to your Lenovo hardware product, see “Warranty information” in the *Safety and Warranty Guide* that comes with your computer.

Purchase additional services

During and after the warranty period, you can purchase additional services from Lenovo at https://www.lenovo.com/services.

Service availability and service name might vary by country or region.

Appendix A. Notices and trademarks

Notices

Lenovo may not offer the products, services, or features discussed in this document in all countries. Consult your local Lenovo representative for information on the products and services currently available in your area. Any reference to a Lenovo product, program, or service is not intended to state or imply that only that Lenovo product, program, or service may be used. Any functionally equivalent product, program, or service that does not infringe any Lenovo intellectual property right may be used instead. However, it is the user's responsibility to evaluate and verify the operation of any other product, program, or service.

Lenovo may have patents or pending patent programs covering subject matter described in this document. The furnishing of this document does not give you any license to these patents. You can send license inquiries, in writing, to:

Lenovo (United States), Inc.
8001 Development Drive
Morrisville, NC 27560
U.S.A.
Attention: Lenovo Director of Licensing

LENOVO PROVIDES THIS PUBLICATION "AS IS" WITHOUT WARRANTY OF ANY KIND, EITHER EXPRESS OR IMPLIED, INCLUDING, BUT NOT LIMITED TO, THE IMPLIED WARRANTIES OF NON-INFRINGEMENT, MERCHANTABILITY OR FITNESS FOR A PARTICULAR PURPOSE. Some jurisdictions do not allow disclaimer of express or implied warranties in certain transactions, therefore, this statement may not apply to you.

Changes are made periodically to the information herein; these changes will be incorporated in new editions of the publication. To provide better service, Lenovo reserves the right to improve and/or modify the products and software programs described in the manuals included with your computer, and the content of the manual, at any time without additional notice.

The software interface and function and hardware configuration described in the manuals included with your computer might not match exactly the actual configuration of the computer that you purchase. For the configuration of the product, refer to the related contract (if any) or product packing list, or consult the distributor for the product sales. Lenovo may use or distribute any of the information you supply in any way it believes appropriate without incurring any obligation to you.

The products described in this document are not intended for use in implantation or other life support applications where malfunction may result in injury or death to persons. The information contained in this document does not affect or change Lenovo product specifications or warranties. Nothing in this document shall operate as an express or implied license or indemnity under the intellectual property rights of Lenovo or third parties. All information contained in this document was obtained in specific environments and is presented as an illustration. The result obtained in other operating environments may vary.

Lenovo may use or distribute any of the information you supply in any way it believes appropriate without incurring any obligation to you.

Any references in this publication to non-Lenovo Web sites are provided for convenience only and do not in any manner serve as an endorsement of those Web sites. The materials at those Web sites are not part of the materials for this Lenovo product, and use of those Web sites is at your own risk.

© Copyright Lenovo 2023

Any performance data contained herein was determined in a controlled environment. Therefore, the result obtained in other operating environments may vary significantly. Some measurements may have been made on development-level systems and there is no guarantee that these measurements will be the same on generally available systems. Furthermore, some measurements may have been estimated through extrapolation. Actual results may vary. Users of this document should verify the applicable data for their specific environment.

This document is copyrighted by Lenovo and is not covered by any open source license, including any Linux agreement(s) which may accompany software included with this product. Lenovo may update this document at any time without notice.

For the latest information or any questions or comments, contact or visit the Lenovo Web site:
https://pcsupport.lenovo.com

Trademarks

LENOVO, LENOVO logo, Yoga, and Yoga logo are trademarks of Lenovo. Intel, Intel SpeedStep, Optane, and Thunderbolt are trademarks of Intel Corporation or its subsidiaries in the U.S. and/or other countries. Microsoft, Windows, Direct3D, BitLocker, and Cortana are trademarks of the Microsoft group of companies. Mini DisplayPort (mDP), DisplayPort, and VESA are trademarks of the Video Electronics Standards Association. The terms HDMI and HDMI High-Definition Multimedia Interface are trademarks or registered trademarks of HDMI Licensing LLC in the United States and other countries. Wi-Fi, Wi-Fi Alliance, WiGig, and Miracast are registered trademarks of Wi-Fi Alliance. USB-C is a trademark of USB Implementers Forum. All other trademarks are the property of their respective owners.

FCC REGULATORY COMPLIANCE

Note: This equipment has been tested and found to comply with the limits for a Class B digital device, pursuant to part 15 of the FCC Rules. These limits are designed to provide reasonable protection against harmful interference in a residential installation. This equipment generates, uses and can radiate radio frequency energy and, if not installed and used in accordance with the instructions, may cause harmful interference to radio communications. However, there is no guarantee that interference will not occur in a particular installation. If this equipment does cause harmful interference to radio or television reception, which can be determined by turning the equipment off and on, the user is encouraged to try to correct the interference by one or more of the following measures:

- Reorient or relocate the receiving antenna.
- Increase the separation between the equipment and receiver.
- Connect the equipment into an outlet on a circuit different from that to whichthe

receiver is connected.

• Consult the dealer or an experienced radio/TV technician for help.

• Changes or modifications not expressly approved by hp could void your authority

to operate the equipment. This device complies with Part 15 of the FCC Rules. Operation is subject
to the following 2 conditions:
1 These devices may not cause harmful interference.
2 These devices must accept any interference received, including interferencethat
may cause undesired operation.

Maintain a distance of 20 cm (8 inches) from your body to be consistent with how the device is tested for compliance with RF exposure requirements.

FCC ID: 2APYS-LPS15WPK

EMC COMPLIANCE STATEMENT

Important: This device [and its power adapter] have demonstrated Electromagnetic Compatibility (EMC) compliance under conditions that included the use of compliant peripheral devices and shielded cables betweensystem components. It is important that you use compliant peripheral devices and shielded cables between system components to reduce the possibility of causing interference to radios, televisions, and other electronic devices.

RADIO FREQUENCY EXPOSURE

This device meets the U.S. Federal Communications Commission's (FCC) requirements for exposure to radio waves and is designed and manufactured not to exceed the FCC's emission limits for exposure to radiofrequency (RF) energy. To comply with FCC RF exposure compliance requirements, this device must notbe co-located or operating in conjunction with any other antenna or transmitter.

Innovation, Science and Economic Development (ISED) Canada Regulatory Compliance

IC: **23965-LPS15WPK**

INDUSTRY CANADA, CLASS B
This Class B digital apparatus complies with CAN ICES-003(B)/NMB-003(B).

Innovation, Science and Economic Development Canada (ISED Canada)/Innovation, Sciences et Développement économique Canada Industry Canada/Industrie

This device complies with ISED's licence-exempt RSSs. Operation is subject to the following two conditions: (1) This device may not cause interference; and (2) This device must accept any interference, including interference that may cause undesired operation of the device.

Le présent appareil est conforme aux CNR d'ISED Canada applicables aux appareils radio exempts de licence. L'exploitation est autorisée aux deux conditions suivantes: (1) l'appareil ne doit pas produire de brouillage, et (2) l'utilisateur de l'appareil doit accepter tout brouillage radioélectrique subi, même si le brouillage est susceptible d'en compromettre le fonctionnement.

Radio Frequency Exposure/Exposition aux radiofréquences

The output power of the radio technology used in the Device is below the radiofrequency exposure limits set by ISED for an uncontrolled environment.

Maintain a distance of **20 cm** from your body to be consistent with how the device is tested for compliance with RF exposure requirements.

La puissance de sortie de la technologie radio utilisée dans le périphérique est inférieure aux limites d'exposition aux fréquences radio définies par ISED Canada pour un environnement noncontrôlé.
Maintenez une distance de 20 cm de votre corps pour être cohérent avec la façon dont l'appareil est testé pour la conformité aux exigences d'exposition RF.

Lenovo