wanbo

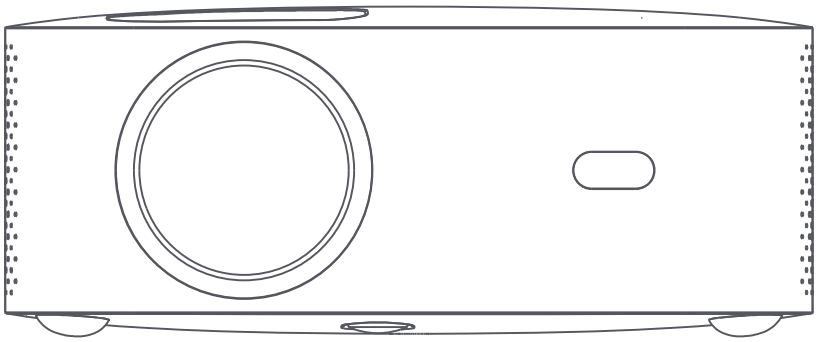

PORTABLE PROJECTOR

User Manual

Please read through this manual in detail before using

Thanks for ordering our company's product, please read this manual throughly before using for the sake of your safty and interests. We assumes no responsibility for any personal injury, loss of property or others that caused by inappropriate operation if you don't follow the instructions stated hereof.

Important Safety Precautions

The following safety instructions will ensure long service life of the machine, and avoid any fire or electric shock. Please ensure to read carefully and pay high attention on all the following warnings

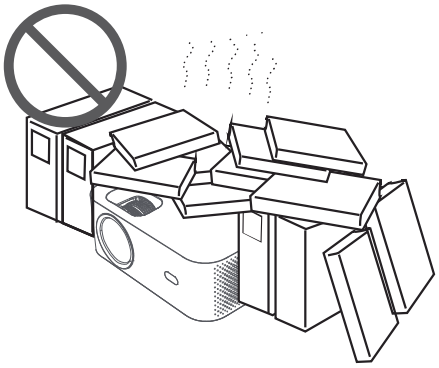

Don’t install in places
with poor ventilation

Don’t install in places that
hot and humid

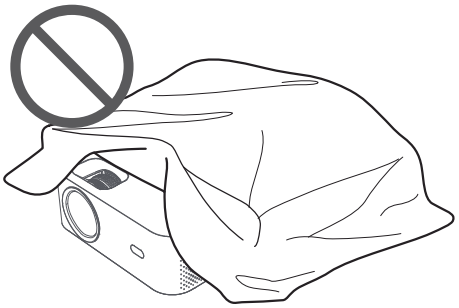

Don’t block the vent
(Inlet or Outlet)

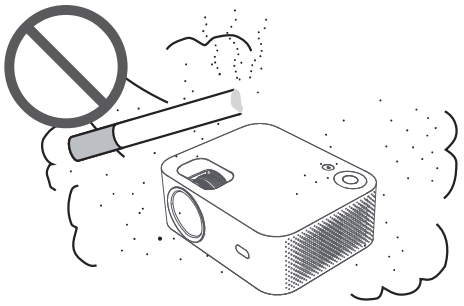

Don’t install in dusty
and smoky areas

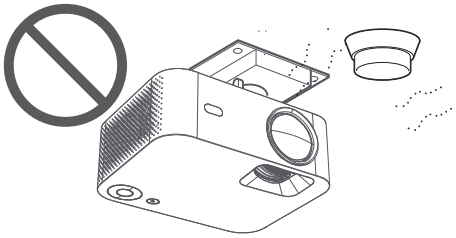

Don’t install close to any
temperature or smoking sensors
(May cause sensors failures)

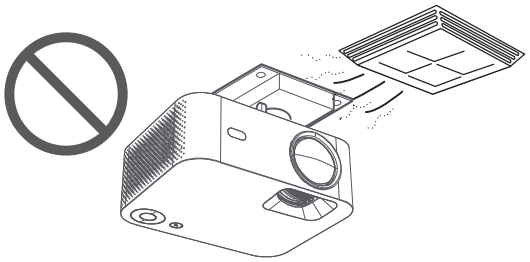

Don’t install in areas that directly blown by
cold and warm wind of air conditioner
(Otherwise, it may cause failure due to
vapor condensation or rise of temperature)

Pay Attention to Heat Dissipation

Please leave at least 30cm between projectors and objects around to maintain projectors' performance and reliability

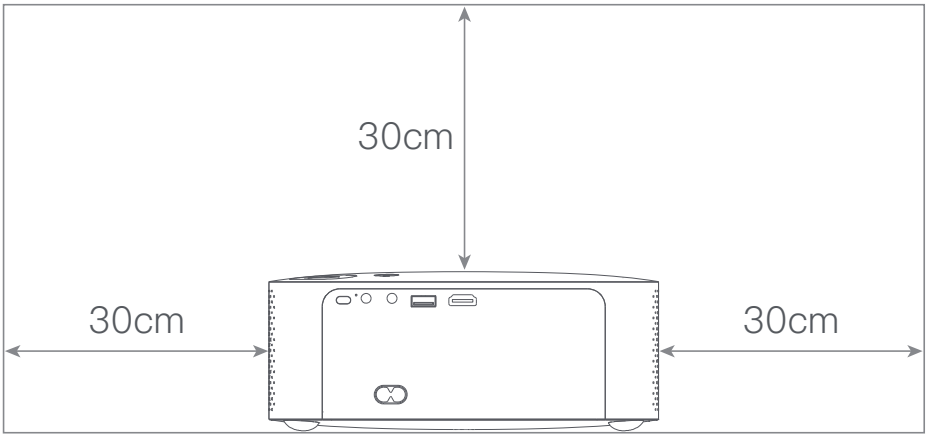

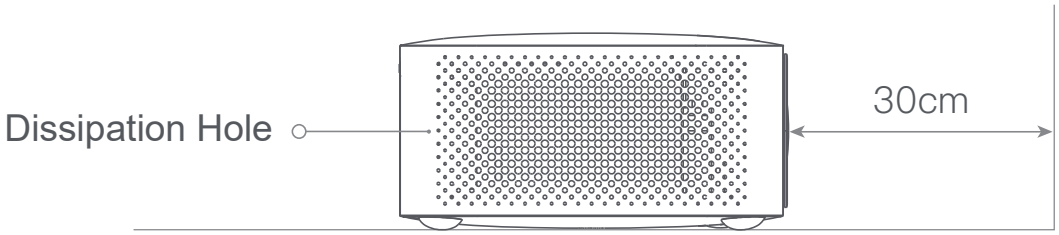

Attention

Please avoid watching lens directly so as to prevent our eyes from being hurt as projectors are with very high brightness

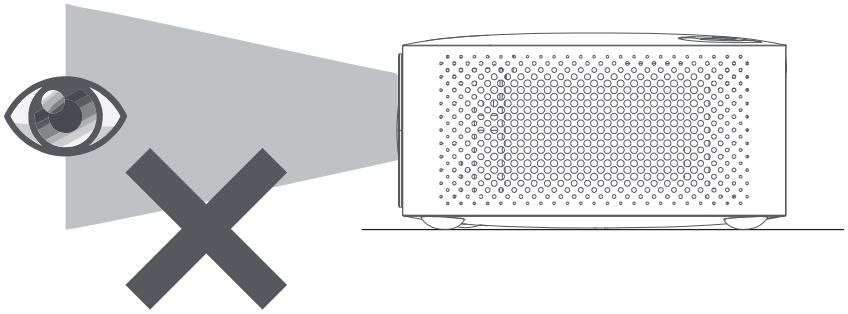

Packing List

Please check if any accessory is missing when opening, please contact your distributor if it has any shortage

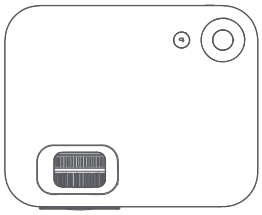

Projector

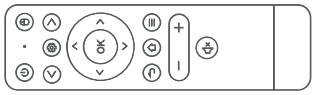

Remote Control

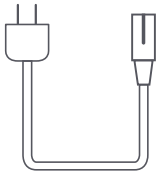

Power Line

User Manual

Basic Parameters

Display Technology	LCD	Light Source Type	LED	Product Type	Desktop
Size	220*185*80mm	Keystone Correction	±40°	Focusing Method	Manual
Weight	1236g	Throw Ratio	1.35:1	Horn	3W

Product Brief

Please check projector components and functions before using

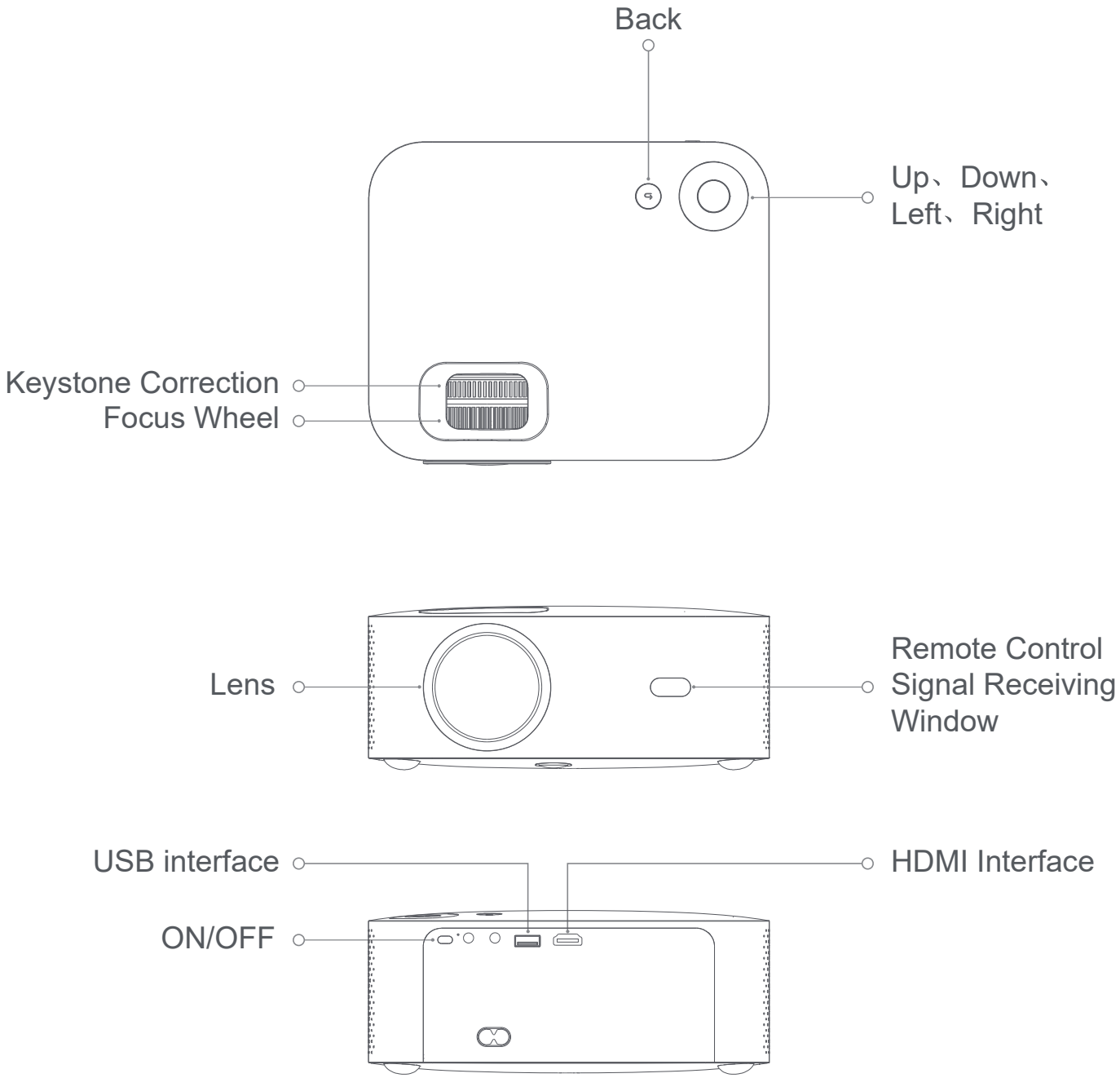

Remote Control

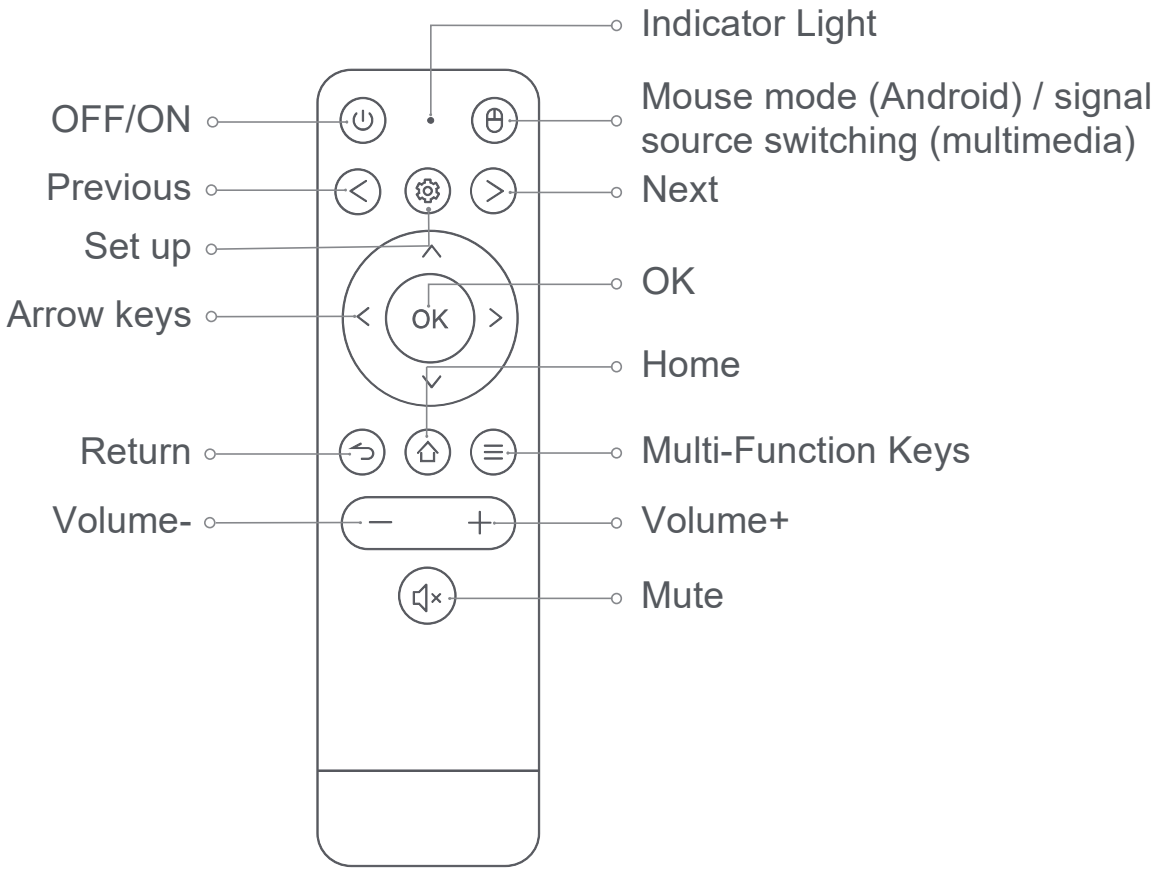

Projection size / Distance

Projection size (inch, no keystone correction)	Screen length * width (m)	Lens ~ screen (m)
50	0.67×1.11	1.50
72	0.98×1.59	2.00
84	1.10×1.86	2.50
100	1.36×2.21	2.84
120	1.65×2.66	3.50

Installation and Adjustment

1 Installation

You can place horizontal or via hanger installation.
Note: hanger is non-attached accessory!

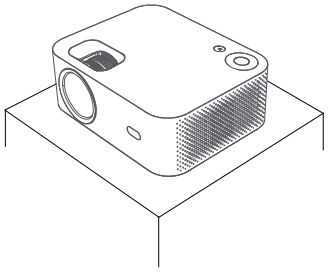

Horizontal Placement

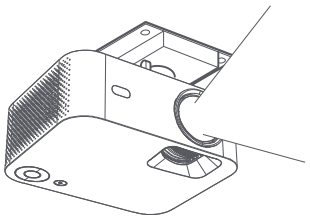

Hanger Installation

2 Adjust Focal Length

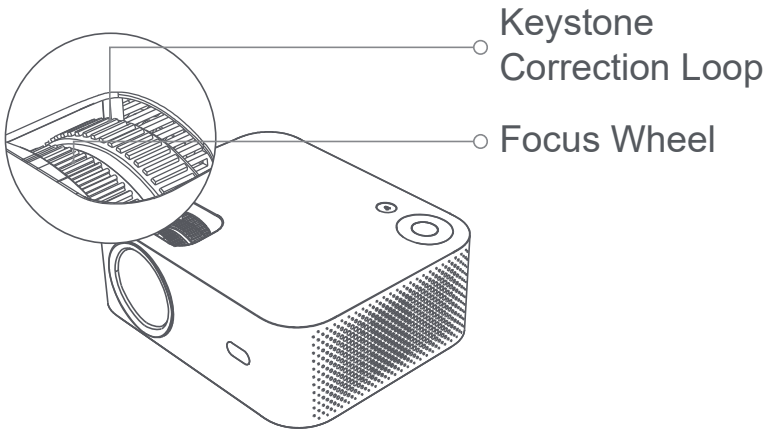

Keystone Distortion

Diagram 1

Blurred Distortion

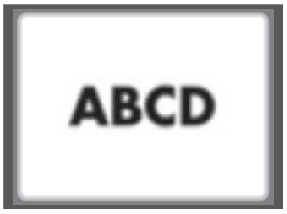

Diagram 2

Achieve satisfactory picture imaging effect via adjusting the keystone correction loop and focus wheel on the machine.

When keystone distortion occurs (as per diagram 1), it is recommended to adjust the keysone correction loop; when the image is blurred (as per diagram 2), it is recommended to adjust the focus wheel to improve picture clarity.

If satisfactory clarity can not be achieved followed setps above, please move the product forward or backward as appropriate.

3 Shutdown Safely

1. Press the button ⏻ on the remote control to turn off the machine
2. Press the button ▭ on the back of machine body to turn off the machine.

Note: Please pull out the plug in time to save energy once the machine is turned off.

Mobile phone screen/same screen

Connect with IOS Phone:

WAY1:

1. Click WiFi and find "WANBO X1-xxxxxx", then input password "12345678" on your iPhone.
2. Click "Screen Mirroring"on your iPhone.

WAY2:

1. Click "OK" on the remote control, connect home WiFi; Then connects the same WiFi on your iPhone.
2. Click "Screen Mirroring" on your iPhone.

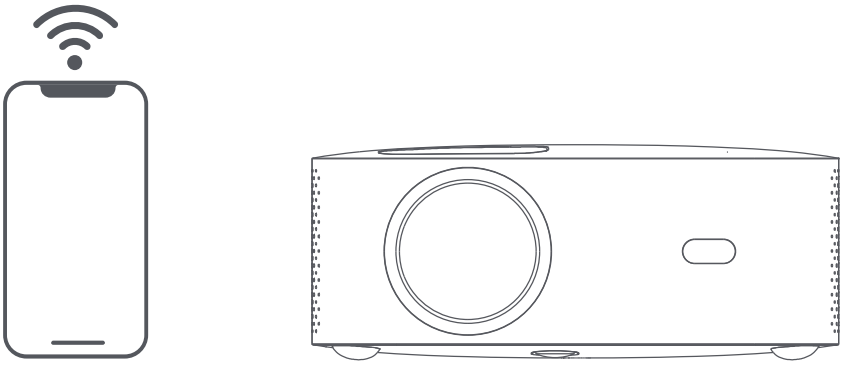

Connect with Android:

1. Click "Wireless Projection" on your phone.
2. Select "WANBO X1" , complete screen sharing.

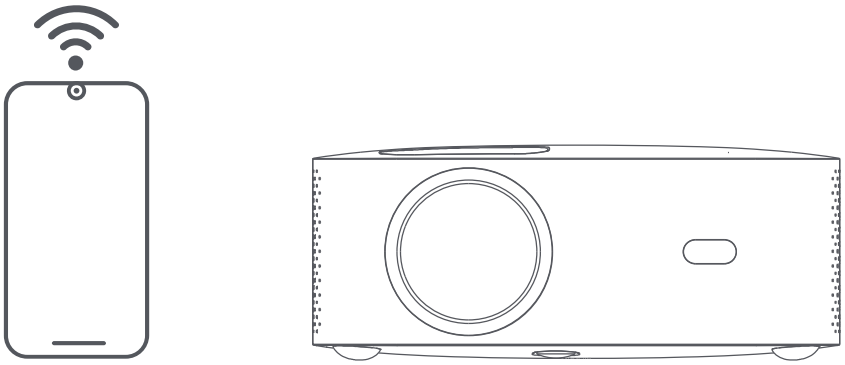

Connect by Cables:

1. Connect iPhone and projector through "USB" port with Phone USB cable.
2. Click "Trust" .

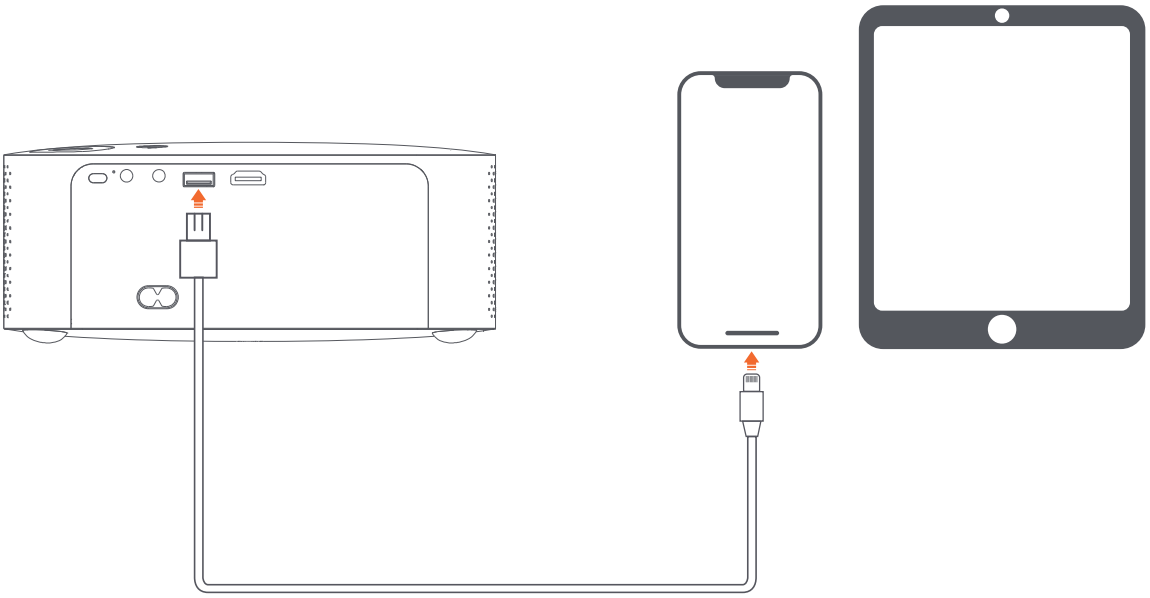

Projection Setting Function details (Android)

Installation Mode

There are four installation modes (Front Projection, Rear Projection, Rear Projection Lifting, Front Projection Lifting). Users can choose installation mode by pressing the left and right direction keys of the remote control, and install the projector as you like.

Keystone Correction

Keystone correction includes four-point keystone correction and vertical keystone correction. Users can choose four-point keystone correction or vertical keystone correction by pressing the confirmation key or left and right direction key on the remote-control under keystone correction option.

Under the four-point keystone correction option: select manual keystone correction, press confirmation key in the remote control to enter the manual keystone interface, then operate according to the screen prompts.

Under the Vertical Keystone Correction option: Screen option shows infinite zoom and manual keystone correction, infinite zoom can reduce or enlarged screen with an adjustment range between 80% and 100%. Manual Keystone Correction adjusts value through left and right direction keys of the remote control to ensure pictures to be the best.

WIFI Connection Description: Enter setting option, click Network Settings, open the WIFI setting switch, select the network required. If no WIFI displayed, we can search and add WIFI manually.

Bluetooth Connection Description: Enter setting option, click Bluetooth setting, open the Bluetooth switch, choose Bluetooth device to match (Note: Bluetooth can connect audio only but can not connect mobile phone.

Clarity Adjustment: Adjust focus first and then adjust distance of placement if not clear.

Mobile Phone Projection / Same Screen (Android Version)

Firstly, make sure Projector and mobile phone under the same WiFi, open Eshare of the projector, and then open video apps in your mobile phone (such as Youtube, Netflix), click TV icon in the upper right corner of the video to project).
iPhone uses Airplay mirror for same screen and projection; Android phone can project directly with Eshare, Android computer can download Eshare or use HDMI cable to complete projection.

Note: The above operations need to be done under the same WIFI, all devices should connect to the same WIFI (wireless network).

System upgrade (Android Version)

Upgrade online

Online update through system upgrade.

U disk upgrade (Local upgrade)

Copy the upgrade firmware to U disk root directory in FAT32 format, insert the U disk into the USB interface of projector, then select U disk upgrade.

Mandatory upgrade

Copy the upgrade firmware to U disk root directory in FAT32 format. Insert the U disk into the USB interface under turn off condition of the projector, meanwhile, long press the device power button for 5 seconds to start automatic upgrade.

Poisonous and harmful substance, Element name and content

Part name	Hazardous substances					
	Lead (Pb)	Mercury (Hg)	Cadmium (Cd)	Hexavalent chromium (Cr(VI))	Polybro minated Biphenyls (PBB)	Polybro minated Diphenyl Ethers (PBDE)
Shell	O	O	O	O	O	O
Optical Machine	O	O	O	O	O	O
Circuit Board	O	O	O	O	O	O
Fan	O	O	O	O	O	O
Other Wires	X	O	O	O	O	O
Remote Control	O	O	O	O	O	O
Power Supply	O	O	O	O	O	O

O: Content of the hazardous substance in all homogeneous materials of the component is under the limits of SJ/T11363-2006.

X: Content of the hazardous substance exceeds the limit requirements specified by SJ/T11363-2006 in at least one homogeneous material of the component. The components labeled "X" " have no substitutive due to global technology development limits. Circuit board assembly *: including printed circuit board and its components, electronic components, etc.

10 The number in the logo represents the normal environmental service life of the product. (Battery Excluded)

Warranty Card

1. We offer "three guarantees " for this product, One year warranty for non-artificial damaged since purchasing (subject to purchase record).
2. We will provide warranty service for any default caused by product technical reasons during warranty period.
3. Following situations are out of the range of guarantee:
   ① Accessories out of the mainframe
   ② Unauthorized disassembly and repair without our consent.
   ③ Damage that caused by external force and other natural disasters.
4. Please fill this card and contact your distributor when products have quality problem
5. This warranty is limited to product maintenance during the warranty period, no other liability

After-Sale Service Card

Customer Name:_ _ _ _ _ _ _ _ _ _ _ Purchase of Shop:_ _ _ _ _ _ _ _ _

Customer ID :_ _ _ _ _ _ _ _ _ _ _ _ _ Customer Tel: _ _ _ _ _ _ _ _ _ _ _ _

Fault Description (Please describe in detail for quick maintenance):

_ _

_ _

_ _

_ _

This product has passed the inspection

Certificate

QC: 05

FCC Warnning:

Any Changes or modifications not expressly approved by the party responsible for compliance could void the user's authority to operate the equipment.
This device complies with part 15 of the FCC Rules. Operation is subject to the following two conditions:
(1) This device may not cause harmful interference, and
(2) this device must accept any interference received, including interference that may cause undesired operation.
Note: This equipment has been tested and found to comply with the limits for a Class B digital device, pursuant to part 15 of the FCC Rules. These limits are designed to provide reasonable protection against harmful interference in a residential installation. This equipment generates uses and can radiate radio frequency energy and, if not installed and used in accordance with the instructions, may cause harmful interference to radio communications. However, there is no guarantee that interference will not occur in a particular installation. If this equipment does cause harmful interference to radio or television reception, which can be determined by turning the equipment off and on, the user is encouraged to try to correct the interference by one or more of the following measures:
-Reorient or relocate the receiving antenna.
-Increase the separation between the equipment and receiver.
-Connect the equipment into an outlet on a circuit different from that to which the receiver is connected.
-Consult the dealer or an experienced radio/TV technician for help. This equipment complies with FCC radiation exposure limits set forth for an uncontrolled environment. This equipment should be installed and operated with minimum distance 20cm between the radiator & your body.

SHEN ZHEN WANBO TECHNOLOGY CO., LTD.

www.szwanbo.cn